I:\CITYAPPS\AUTOCAD\STD_DETAILS\DRAWING_FILES\TC52_COV

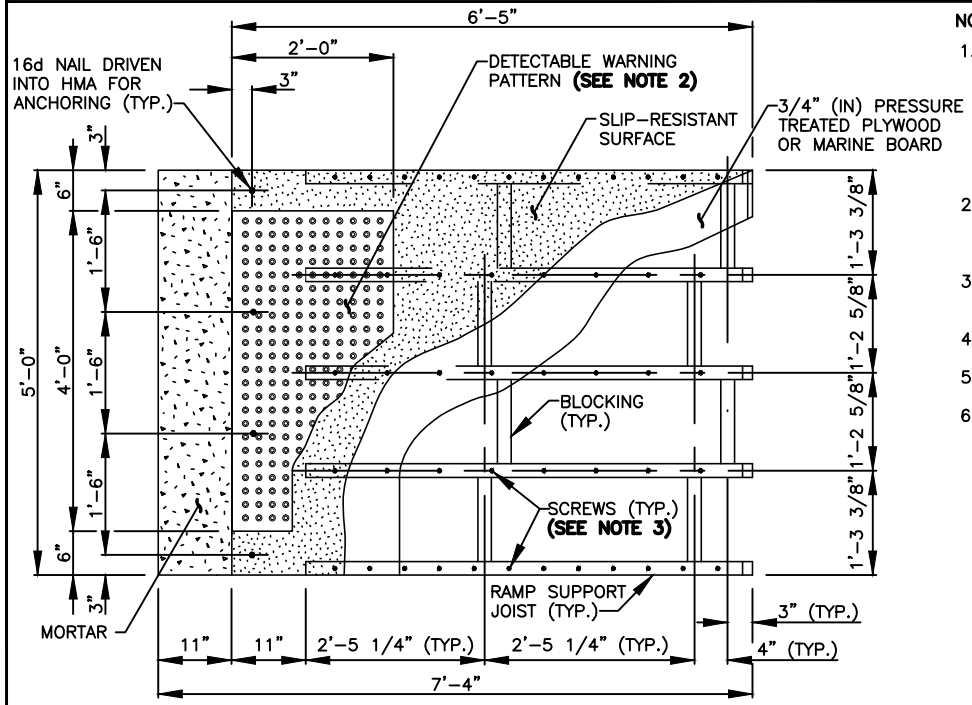

TOP VIEW
RAMP DETAIL

NOTES

1. THIS DESIGN ASSUMES OPTIMAL CONDITIONS AND A STANDARD CURB HEIGHT OF 6" (IN). INSTALLED RAMPS SHALL BE NO STEEPER THAN 12H : 1V, AND SHALL HAVE A CROSS-SLOPE OF 2% OR LESS. USE SHIMS OR GROUT AS REQUIRED TO ADJUST FOR EXISTING CONDITIONS AND TO PREVENT ROCKING. SHIMS SHALL BE NO HIGHER THAN 1" (IN), AND SHALL BE SECURED TO THE RAMP. FOR CURBS SHORTER THAN 6" (IN), INSTALL A RAMP ON THE SIDEWALK, NO STEEPER THAN 12H : 1V, MADE OF GROUT OR AS APPROVED BY THE ENGINEER. ADJUSTMENTS TO THE RAMP DIMENSIONS SHOWN MAY BE REQUIRED TO MATCH EXISTING CONDITIONS.
2. THE DETECTABLE WARNING PATTERN SHALL BE INSTALLED ONLY WHEN THE INTENT IS TO GUIDE PEDESTRIANS DIRECTLY ACROSS THE ROADWAY (CROSSWALK). SEE STANDARD PLAN F-40.10 FOR DETAILS.
3. SCREWS SHALL BE USED TO SECURE THE RAMP SURFACE. SPACING SHALL BE IN ACCORDANCE WITH THE CURRENT BUILDING CODE.
4. USE A SLIP-RESISTANT TREATMENT FOR THE SURFACE OF RAMP.
5. ALL FASTENERS SHALL BE GALVANIZED.
6. DO NOT INSTALL A HAND RAILING IF USING THE EDGE BOARD OPTION.

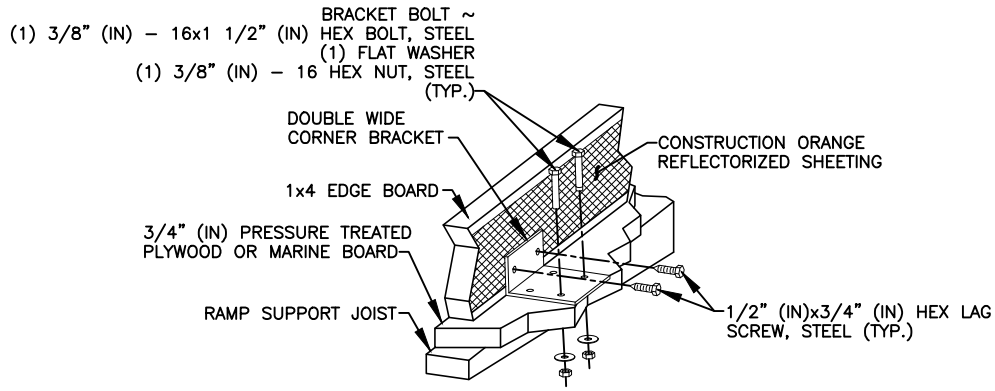

PERSPECTIVE VIEW

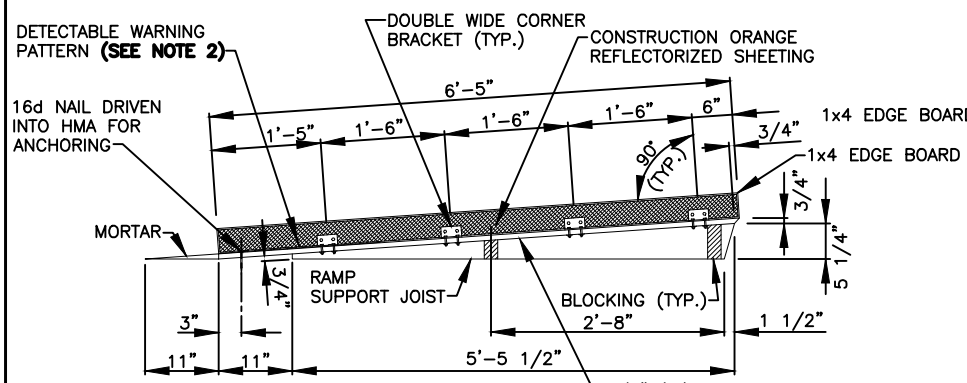

SIDE VIEW
RAMP AND EDGE BOARD

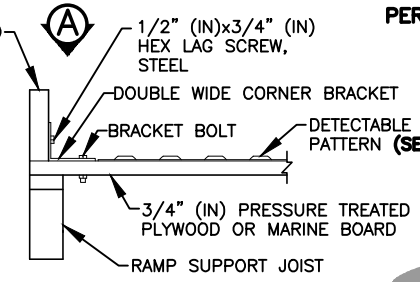

END VIEW
EDGE BOARD ATTACHMENT DETAIL

DETAIL A

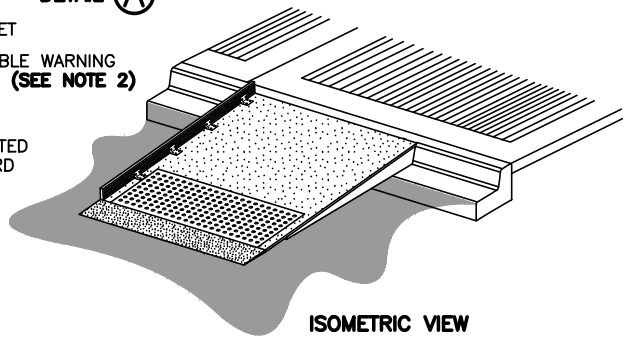

ISOMETRIC VIEW

REV NO.	DATE	BY	APPR
1	3/16	RAW	CJC
2	9/21	RAW	CJC

PUBLIC WORKS - STREETS AND TRANSPORTATION

APPROVED BY: TRAFFIC ENGINEER MANAGER

APPROVED DATE: 9/1/2021

CITY OF Vancouver WASHINGTON

TRAFFIC CONTROL STANDARD PLAN
TEMPORARY PEDESTRIAN RAMP WITH EDGE BOARD

STANDARD PLAN NUMBER
TC52