STANDARD PLANS

Public Works – Streets & Transportation

Street Design
Traffic Signal
Lighting
Interconnect
Signing/Striping
Traffic Control

September 1, 2021

520 SE 155th Ave. • P.O. Box 1995 • Vancouver, WA 98668-1995 • www.cityofvancouver.us

TRANSPORTATION STANDARD PLANS

WEB SITE:
http://www.cityofvancouver.us/publicworks/page/transportation-development-review-and-capital-standard-plans-details
FTP SITE:
ftp://ftp.ci.vancouver.wa.us/Trans/transportation_standards/std_details/

CITY OF Vancouver WASHINGTON

SHEETS

STD. PLAN NO.	TITLE	ORIGINAL RELEASE DATE	REVISED DATE
T01-	**CURBS, GUTTERS, APPROACHES**		
T01-01A	CONCRETE CURBS	3/31/2017	9/1/2021
T01-01B	ADA RAMP CURBS	3/31/2017	9/1/2021
T01-02	EXTRUDED CONCRETE DOWELED CURB	8/30/2004	9/1/2021
T01-03	CURB DRAIN	8/30/2004	9/1/2021
T01-04A	DRIVEWAY WITH DETACHED SIDEWALK	2/12/2007	9/1/2021
T01-04B	SINGLE FAMILY RESIDENCE DRIVEWAY WITH WINGS AND NO CURB	2/12/2007	9/1/2021
T01-05A	DRIVEWAY WITH ATTACHED SIDEWALK OPTION A	3/15/2006	9/1/2021
T01-05B	DRIVEWAY WITH ATTACHED SIDEWALK OPTION B	3/15/2006	9/1/2021
T01-06	CONCRETE DRIVEWAY CUT DETAIL	2/1/2021	9/1/2021
T01-07	MAJOR COMMERCIAL DRIVEWAY	8/30/2004	9/1/2021
T01-08	SHARED DRIVEWAY WITH DETACHED SIDEWALK	2/12/2007	9/1/2021
T01-09	CURB STAMP DETAIL	7/1/2014	9/1/2021
T02-	**SIDEWALKS, RAMPS**		
T02-01A	SIDEWALK DETAIL	8/30/2004	9/1/2021
T02-01B	INTERSECTING SIDEWALK DETAIL	8/30/2004	9/1/2021
T02-01C	BUS STOP SHELTER CONCRETE PAD	2/12/2007	9/1/2021
T02-01D	SIDEWALK REPLACEMENT MINIMUM CRITERIA TO ENSURE ADA COMPLIANCE AND REPAIR OPTIONS	2/12/2007	9/1/2021
T02-02	HERITAGE SIDEWALK	8/30/2004	9/1/2021
T02-03	TREE WELL AND PAVER EDGE INSTALLATION	8/30/2004	9/1/2021
T02-04A	SINGLE DIAGONAL RAMP PLACEMENT	8/30/2004	9/1/2021
T02-04B	DIAGONAL RAMP CONSTRUCTION	8/30/2004	9/1/2021
T02-05A	DOUBLE DIRECTIONAL RAMP PLACEMENT	8/30/2004	9/1/2021
T02-05B	DIRECTIONAL RAMP CONSTRUCTION	8/30/2004	9/1/2021
T02-06A	DOUBLE COMBINATION RAMP PLACEMENT - A	8/30/2004	9/1/2021
T02-06B	DOUBLE COMBINATION RAMP PLACEMENT - B	8/30/2004	9/1/2021
T02-06C	COMBINATION RAMP CONSTRUCTION	8/30/2004	9/1/2021
T02-07A	DOUBLE PARALLEL RAMP PLACEMENT	8/30/2004	9/1/2021
T02-07B	PARALLEL RAMP CONSTRUCTION	8/30/2004	9/1/2021
T02-08	PERPENDICULAR RAMP CONSTRUCTION	8/30/2004	9/1/2021
T02-09A	SINGLE DIRECTIONAL CURB RAMP ATTACHED SIDEWALK	3/31/2017	9/1/2021
T02-09B	SINGLE DIRECTIONAL CURB RAMP DETTACHED SIDEWALK	3/31/2017	9/1/2021
T02-10	TEMPORARY HMA RAMP	8/30/2004	9/1/2021
T02-11	STANDARD LANDING CROSS SECTIONS A-A AND B-B	8/30/2004	9/1/2021
~~T02-12~~	~~PAVER LANDING CROSS SECTIONS A-A AND B-B~~ **DISCONTINUED**	8/30/2004	4/2/2018
T02-13	STANDARD LANDING CROSS SECTIONS C-C AND D-D	8/30/2004	9/1/2021
~~T02-14~~	~~PAVER LANDING CROSS SECTIONS C-C AND D-D~~ **DISCONTINUED**	8/30/2004	4/2/2018
T02-15	RAMP LIP, DRIVEWAY LIP AND DETECTABLE WARNING PATTERN	8/30/2004	9/1/2021
T02-16	BRICK UNIT PAVER PATTERN	8/30/2004	9/1/2021
T02-17A	TYPE 1 PEDESTRIAN REFUGE ISLAND MID-BLOCK	3/15/2006	9/1/2021
T02-17B	TYPE 2 INTERSECTION PEDESTRIAN REFUGE ISLAND WITH NOSE	3/15/2006	9/1/2021
T02-17C	TYPICAL PEDESTRIAN REFUGE ISLAND SECTIONS	3/15/2006	9/1/2021
T02-17D	TYPICAL PEDESTRIAN REFUGE ISLAND NOTES	3/15/2006	9/1/2021
T02-20	RAISED CROSSWALK PREFERRED OPTION	8/30/2004	9/1/2021
T02-21	RAISED CROSSWALK OPTION B	3/15/2006	9/1/2021
T02-22	SPEED BUMP	8/30/2004	9/1/2021
T02-23	SPEED CUSHION TYPE I	8/30/2004	9/1/2021
T02-24	SPEED CUSHION TYPE II	8/30/2004	9/1/2021
T02-25	SPEED CUSHION TYPE III	8/30/2004	9/1/2021
T02-26A	SPEED TABLE (25 MPH POSTED)	7/1/2019	9/1/2021
T02-26B	SPEED TABLE (30 MPH POSTED)	7/1/2019	9/1/2021
T03-	**LANDSCAPING AND IRRIGATION (WITHIN RIGHT OF WAY ONLY)**		
T03-01	CONSTRUCTION NOTES FOR IRRIGATION WITHIN RIGHT OF WAY ONLY	2/12/2007	9/1/2021
T03-02	IRRIGATION CONTROLLER ENCLOSURE	2/12/2007	9/1/2021
T03-03	IRRIGATION CONTROLLER WALL MOUNT	2/12/2007	9/1/2021
T03-04	IRRIGATION TRENCHING DETAIL	2/12/2007	9/1/2021
T03-05	IRRIGATION PIPE SLEEVING DETAIL	2/12/2007	9/1/2021
T03-06	PRESSURE REGULATOR FOR DRINKING FOUNTAIN	2/12/2007	9/1/2021
T03-07	AUTOMATIC CONTROL VALVE	2/12/2007	9/1/2021
T03-08	AUTOMATIC CONTROL VALVE WITH UNIK CONTROL MODULE	2/12/2007	9/1/2021
T03-09	QUICK COUPLING VALVE	2/12/2007	9/1/2021

APPROVED BY: M H Abdallah
ENGINEER MANAGER

INDEX 1

I:\CITYAPPS\AUTOCAD\STD_DETAILS\DRAWING_FILES\INDEX1.DWG

TRANSPORTATION STANDARD PLANS

WEB SITE:
http://www.cityofvancouver.us/publicworks/page/transportation-development-review-and-capital-standard-plans-details
FTP SITE:
ftp://ftp.ci.vancouver.wa.us/Trans/transportation_standards/std_details/

CITY OF Vancouver WASHINGTON

SHEETS

STD. PLAN NO.	TITLE	ORIGINAL RELEASE DATE	REVISED DATE
T03-	**LANDSCAPING AND IRRIGATION (WITHIN RIGHT OF WAY ONLY) CONTINUED**		
T03-10	ISOLATION BALL VALVE	2/12/2007	9/1/2021
T03-11	MANUAL DRAIN VALVE	2/12/2007	9/1/2021
T03-12	MANUAL WEDGE GATE VALVE	2/12/2007	9/1/2021
~~T03-13~~	~~DOUBLE CHECK VALVE ASSEMBLY (DCVA)~~ **DISCONTINUED**	2/12/2007	2/1/2021
T03-14	ROTARY SPRAY HEAD	2/12/2007	9/1/2021
T03-15	POP-UP SPRAY HEAD	2/12/2007	9/1/2021
T03-16A	BARE ROOT PLANTING	2/12/2007	9/1/2021
T03-16B	TREE PLANTING PERFORATED PIPE INSTALLATION	2/1/2021	9/1/2021
T03-16C	DECIDUOUS BALLED/BURLAP TREE PLANTING	2/1/2021	9/1/2021
T03-16D	BROADLEAF BALLED/BURLAP TREE PLANTING	2/1/2021	9/1/2021
~~T03-17~~	~~TREE PLANTING PERFORATED PIPE INSTALLATION~~ **DISCONTINUED**	2/12/2007	2/1/2021
~~T03-18~~	~~DECIDUOUS BALLED/BURLAP TREE PLANTING~~ **DISCONTINUED**	2/12/2007	2/1/2021
T03-19	SHRUB CONTAINER PLANTING, PERENNIAL AND GROUND COVER DETAILS	8/15/2008	9/1/2021
T03-20	TREE PROTECTION FENCE DETAIL	8/15/2008	9/1/2021
T03-21	GROUNDCOVER PLANTING DETAIL	2/12/2007	9/1/2021
T03-22A	ROOT BARRIER INSTALLATION	3/15/2016	9/1/2021
T03-22B	ROOT BARRIER GENERAL NOTES	8/15/2008	9/1/2021
T03-23	PLANTING AT RIGHT OF WAYS	7/1/2014	9/1/2021
T03-24A	PLANTING AND PRUNING NOTES	1/1/2015	9/1/2021
T03-24B	PLANTING AND PRUNING NOTES	1/1/2015	9/1/2021
T03-25	ELECTRICAL OUTLET DETAIL FOR TREE WELL	2/1/2021	9/1/2021
T03-26A	4' X 8' TREE GRATE	2/1/2021	9/1/2021
T03-26B	4' X 8' TREE GRATE	2/1/2021	9/1/2021
T03-26C	4' X 8' TREE GRATE FRAME PREFERRED OPTION	2/1/2021	9/1/2021
T03-26D	4' X 8' TREE GRATE FRAME RETRO-FIT	2/1/2021	9/1/2021
T03-26E	TREE GRATE FRAME FOR PAVER SIDEWALK AREAS	2/1/2021	9/1/2021
T04-	**DESIGN GUIDELINES**		
T04-01	VIEW OBSTRUCTIONS ON HORIZONTAL CURVES	8/30/2004	9/1/2021
T04-02	VERTICAL CURVE RELATIONSHIPS	8/30/2004	9/1/2021
T04-03	SIGHT DISTANCE REQUIREMENTS FOR CONTROLLED INTERSECTIONS ONLY	8/30/2004	9/1/2021
T04-04	VISION CLEARANCE TRIANGLES	8/30/2004	9/1/2021
T04-05	AUXILIARY LANES	8/30/2004	9/1/2021
T04-06	MEDIAN OPENINGS FOR INTERSECTIONS	8/30/2004	9/1/2021
T04-07	RESIDENTIAL DRIVEWAYS	8/30/2004	9/1/2021
T04-08	COMMERCIAL/LOW VOLUME DRIVEWAYS	8/30/2004	9/1/2021
T04-09	COMMERCIAL/HIGH VOLUME TWO-WAY DRIVEWAYS	8/30/2004	9/1/2021
T04-10	COMMERCIAL/HIGH VOLUME ONE-WAY DRIVEWAYS	8/30/2004	9/1/2021
T04-11	INTERSECTION CROSS SLOPES AND CROWN RUN-OFF	8/30/2004	9/1/2021
T04-12	NON-ARTERIAL STREETS DRIVEWAY POLICY	8/30/2004	9/1/2021
T04-13	ARTERIAL STREETS RESIDENTIAL/COMMERCIAL DRIVEWAY WIDTHS	8/30/2004	9/1/2021
T05-	**SURFACE TREATMENTS AND PAVEMENT (CONCRETE/ASPHALT)**		
T05-01A	PAVEMENT RESTORATION/WIDENING AT CURBS	8/30/2004	9/1/2021
T05-01B	PAVEMENT RESTORATION LIMITS	8/15/2008	9/1/2021
T05-02	CONCRETE JOINTS	8/30/2004	9/1/2021
T05-03	CONCRETE PATCH JOINTS	8/30/2004	9/1/2021
T05-04A	STANDARD TRENCH RESTORATION - NOTES	8/30/2004	9/1/2021
T05-04B	STANDARD TRENCH RESTORATION - NOTES	8/30/2004	9/1/2021
T05-05	STANDARD TRENCH RESTORATION - HMA - GRANULAR BACKFILL	8/30/2004	9/1/2021
T05-06A	STANDARD TRENCH RESTORATION - HMA - CONTROL DENSITY FILL	8/30/2004	9/1/2021
T05-06B	STANDARD TRENCH RESTORATION - HMA - CONTROL DENSITY FILL	8/30/2004	9/1/2021
T05-07	STANDARD TRENCH RESTORATION - HMA - TRANSVERSE CUTS	3/15/2006	9/1/2021
T05-08	STANDARD TRENCH RESTORATION - CEMENT CONCRETE PAVEMENT	8/30/2004	9/1/2021
T05-09	CONCRETE PATCH LAYOUT - INTERIOR	8/30/2004	9/1/2021
T05-10	CONCRETE PATCH LAYOUT - EXTERIOR	8/30/2004	9/1/2021
T05-11	STEEL LAYOUT FOR CONCRETE PATCH - INTERIOR	8/30/2004	9/1/2021
T05-12	STEEL LAYOUT FOR CONCRETE PATCH - EXTERIOR	8/30/2004	9/1/2021
T05-13	CURB AND GUTTER RESTORATION AT DRIVEWAYS WITH DETACHED SIDEWALK	8/15/2008	9/1/2021

APPROVED BY: M H Abdallah
ENGINEER MANAGER

INDEX 2

I:\CITYAPPS\AUTOCAD\STD_DETAILS\DRAWING_FILES\INDEX2.DWG

TRANSPORTATION STANDARD PLANS

WEB SITE:
http://www.cityofvancouver.us/publicworks/page/transportation-development-review-and-capital-standard-plans-details
FTP SITE:
ftp://ftp.ci.vancouver.wa.us/Trans/transportation_standards/std_details/

CITY OF Vancouver WASHINGTON

SHEETS

STD. PLAN NO.	TITLE	ORIGINAL RELEASE DATE	REVISED DATE
T05–	**SURFACE TREATMENTS AND PAVEMENT (CONCRETE/ASPHALT) – CONTINUED**		
T05–14	OPTIONAL E–1 CURB REPLACEMENT WITH A–1 CURB AND GUTTER	8/15/2008	9/1/2021
T05–15	CORED HOLE (POTHOLE/TEST HOLE/MONITORING WELL) SECTION AND PLAN VIEW	7/1/2014	9/1/2021
T06–	**FOURTH PLAIN STREETSCAPE DESIGN STUDY AREA ONLY**		
T06–01	FOURTH PLAIN BOULEVARD "VILLAGE" SIDEWALK	8/15/2008	9/1/2021
T06–02	FOURTH PLAIN BOULEVARD "VILLAGE" CORNER WITHOUT BUS STOP	8/15/2008	9/1/2021
T06–03	FOURTH PLAIN BOULEVARD "VILLAGE" CORNER WITH BUS STOP	8/15/2008	9/1/2021
T06–04	FOURTH PLAIN BOULEVARD "GREEN NECKLACE" SIDEWALK NORTH SIDE	8/15/2008	9/1/2021
T06–05	FOURTH PLAIN BOULEVARD "GREEN NECKLACE" SIDEWALK SOUTH SIDE	8/15/2008	9/1/2021
T06–06	FOURTH PLAIN BOULEVARD "COMMERCIAL" STREET SIDEWALK	8/15/2008	9/1/2021
T06–07	FOURTH PLAIN BOULEVARD PAVER AT TREE WELL AND PLANTER STRIP	8/15/2008	9/1/2021
T06–08	FOURTH PLAIN BOULEVARD PEDESTRIAN ACCESS AT UNSIGNALIZED LOCATIONS	8/15/2008	9/1/2021
T07–	**MISCELLANEOUS CONSTRUCTION; MAILBOXES, FENCING AND BARRICADE**		
T07–01	TYPICAL MAILBOX PLACEMENT	8/30/2004	9/1/2021
T07–02	PRECAST CONCRETE BOLLARD	8/30/2004	9/1/2021
T07–03A	VANDAL RESISTANT BOLLARD (LIGHTED AND NON–LIGHTED)	2/12/2007	9/1/2021
T07–03B	TYPICAL CONNECTING PUBLIC STREET WITH PATHWAYS AND LIGHTING	2/12/2007	9/1/2021
T07–04	TYPE 2 BOLLARD	3/15/2006	9/1/2021
T07–05	REMOVABLE BOLLARD	3/15/2006	9/1/2021
T07–06	TYPE III BARRICADE	8/15/2008	9/1/2021
T07–07A	CHAIN LINK FENCE TYPES 3 AND 4	3/15/2016	9/1/2021
T07–07B	CHAIN LINK FENCE BLOW–UP DETAILS TYPES 3 AND 4	3/15/2016	9/1/2021
T07–08A	CHAIN LINK SINGLE GATE TYPES 3 AND 4	3/15/2016	9/1/2021
T07–08B	CHAIN LINK DOUBLE GATE TYPES 3 AND 4	3/15/2016	9/1/2021
T07–08C	CHAIN LINK GATE BLOW–UP DETAILS TYPE 3 AND 4	3/15/2016	9/1/2021
T08–	**HEIGHTS DISTRICT REDEVELOPMENT**		
T08–00	HEIGHTS DISTRICT REDEVELOPMENT KEY MAP	9/1/2021	9/1/2021
T08–01	HEIGHTS DISTRICT REDEVELOPMENT MILL PLAIN BOULEVARD	9/1/2021	9/1/2021
T08–02	HEIGHTS DISTRICT REDEVELOPMENT MILL PLAIN BOULEVARD OVERVIEW	9/1/2021	9/1/2021
T08–03	HEIGHTS DISTRICT REDEVELOPMENT MACARTHUR BOULEVARD	9/1/2021	9/1/2021
T08–04	HEIGHTS DISTRICT REDEVELOPMENT MACARTHUR BOULEVARD OVERVIEW	9/1/2021	9/1/2021
T08–05	HEIGHTS DISTRICT REDEVELOPMENT DEVINE ROAD	9/1/2021	9/1/2021
T08–06	HEIGHTS DISTRICT REDEVELOPMENT DEVINE ROAD OVERVIEW	9/1/2021	9/1/2021
T08–07	HEIGHTS DISTRICT REDEVELOPMENT LOOP RETAIL STREET	9/1/2021	9/1/2021
T08–08	HEIGHTS DISTRICT REDEVELOPMENT LOOP RETAIL STREET OVERVIEW	9/1/2021	9/1/2021
T08–09	HEIGHTS DISTRICT REDEVELOPMENT STANDARD STREET	9/1/2021	9/1/2021
T08–10	HEIGHTS DISTRICT REDEVELOPMENT STANDARD STREET OVERVIEW	9/1/2021	9/1/2021
T08–11	HEIGHTS DISTRICT REDEVELOPMENT LOOP RESIDENTIAL STREET	9/1/2021	9/1/2021
T08–12	HEIGHTS DISTRICT REDEVELOPMENT LOOP RESIDENTIAL STREET OVERVIEW	9/1/2021	9/1/2021
T08–13	HEIGHTS DISTRICT REDEVELOPMENT STREET ANGLED PARKING	9/1/2021	9/1/2021
T08–14	HEIGHTS DISTRICT REDEVELOPMENT STREET ANGLED PARKING OVERVIEW	9/1/2021	9/1/2021
T08–15	HEIGHTS DISTRICT REDEVELOPMENT ANDRESEN ROAD	9/1/2021	9/1/2021
T08–16	HEIGHTS DISTRICT REDEVELOPMENT ANDRESEN ROAD OVERVIEW	9/1/2021	9/1/2021
T08–17	HEIGHTS DISTRICT REDEVELOPMENT RAISED CONCRETE CROSSWALK	9/1/2021	9/1/2021
T08–18	HEIGHTS DISTRICT REDEVELOPMENT RAISED CONCRETE INTERSECTION	9/1/2021	9/1/2021
T08–19	HEIGHTS DISTRICT REDEVELOPMENT STANDARD CURB BULB–OUT	9/1/2021	9/1/2021
T08–20	HEIGHTS DISTRICT REDEVELOPMENT CURB BULB–OUT RAISED INTERSECTION	9/1/2021	9/1/2021
T08–21	HEIGHTS DISTRICT REDEVELOPMENT BULB–OUT BIORETENTION	9/1/2021	9/1/2021
T08–22	HEIGHTS DISTRICT REDEVELOPMENT SILVA CELL PLANTER	9/1/2021	9/1/2021
T08–23	HEIGHTS DISTRICT REDEVELOPMENT SILVA CELL WITH TREE GRATE	9/1/2021	9/1/2021
T08–24	HEIGHTS DISTRICT REDEVELOPMENT DEEP RETAIL LOOP BIORETENTION	9/1/2021	9/1/2021
T08–25	HEIGHTS DISTRICT REDEVELOPMENT BIORETENTION SWALE	9/1/2021	9/1/2021
T08–26	HEIGHTS DISTRICT REDEVELOPMENT SAND SET PAVERS	9/1/2021	9/1/2021

APPROVED BY: M H Abdalla
ENGINEER MANAGER

INDEX 3

I:\CITYAPPS\AUTOCAD\STD_DETAILS\DRAWING_FILES\INDEX3.DWG

TRANSPORTATION STANDARD PLANS

WEB SITE:
http://www.cityofvancouver.us/publicworks/page/transportation-development-review-and-capital-standard-plans-details
FTP SITE:
ftp://ftp.ci.vancouver.wa.us/Trans/transportation_standards/std_details/

CITY OF Vancouver WASHINGTON

SHEETS

STD. PLAN NO.	TITLE	ORIGINAL RELEASE DATE	REVISED DATE
T08–	**HEIGHTS DISTRICT REDEVELOPMENT – CONTINUED**		
T08–27	HEIGHTS DISTRICT REDEVELOPMENT BIKE LANE BUFFERS	9/1/2021	9/1/2021
T08–28	HEIGHTS DISTRICT REDEVELOPMENT WALK–OFF	9/1/2021	9/1/2021
T08–29	HEIGHTS DISTRICT REDEVELOPMENT CONCRETE SEAT WALL	9/1/2021	9/1/2021
T08–30	HEIGHTS DISTRICT REDEVELOPMENT CONCRETE VALLEY GUTTER	9/1/2021	9/1/2021
T08–31	HEIGHTS DISTRICT REDEVELOPMENT LED STREET LIGHT STANDARD	9/1/2021	9/1/2021
T08–32	HEIGHTS DISTRICT REDEVELOPMENT CYCLE TRACK	9/1/2021	9/1/2021
T10–	**STREET SECTIONS**		
T10–00	STREET SECTION GENERAL NOTES	2/1/2021	9/1/2021
T10–01A	STREET TERMINATION FOR PERSONAL VEHICLES (NOT EMERGENCY VEHICLES)	3/15/2006	9/1/2021
T10–01B	STREET TERMINATION	8/30/2004	9/1/2021
T10–02	BUBBLES FOR STREETS	8/30/2004	9/1/2021
T10–03	LOCAL ACCESS AND LOOP ROAD HALF STREET CONSTRUCTION	8/30/2004	9/1/2021
T10–04	6–LANE PRINCIPAL ARTERIAL WITH CENTER LEFT–TURN AND BIKE LANES	8/30/2004	9/1/2021
T10–05	6–LANE PRINCIPAL ARTERIAL WITH CENTER LEFT–TURN LANE	8/30/2004	9/1/2021
T10–06	4–LANE PRINCIPAL ARTERIAL WITH CENTER LEFT–TURN AND BIKE LANES	8/30/2004	9/1/2021
T10–07	4–LANE PRINCIPAL ARTERIAL WITH CENTER LEFT–TURN LANE	8/30/2004	9/1/2021
T10–08	4–LANE MINOR ARTERIAL WITH CENTER LEFT–TURN AND BIKE LANES	8/30/2004	9/1/2021
T10–08A	FORT VANCOUVER WAY – CAMPUS STREET STANDARD (McLOUGHLIN TO FOURTH PLAIN)	3/27/2013	9/1/2021
T10–09	4–LANE MINOR ARTERIAL WITH CENTER LEFT–TURN LANE	8/30/2004	9/1/2021
T10–10	4–LANE MINOR ARTERIAL WITH BIKE LANES	8/30/2004	9/1/2021
T10–11	4–LANE MINOR ARTERIAL	8/30/2004	9/1/2021
T10–12	3–LANE COLLECTOR/MINOR ARTERIAL WITH BIKE LANES	8/30/2004	9/1/2021
T10–13	2–LANE COLLECTOR/MINOR ARTERIAL	8/30/2004	9/1/2021
T10–14	NEIGHBORHOOD CIRCULATOR NON RESIDENTIAL LOCAL ACCESS	8/30/2004	9/1/2021
T10–15A	LOCAL ACCESS OPTION A (32' ROADWAY WIDTH)	2/12/2007	9/1/2021
T10–15B	LOCAL ACCESS OPTION B (28' ROADWAY WIDTH)	2/12/2007	9/1/2021
T10–16	LOOP AND CUL–DE–SAC	8/30/2004	9/1/2021
T10–17	PRIVATE STREET	8/30/2004	9/1/2021
T10–18	PRIVATE STREET 1–4 DWELLINGS	8/30/2004	9/1/2021
T10–19	ALLEY	8/30/2004	9/1/2021
T10–20	5–LANE PRIMARY INDUSTRIAL II	8/30/2004	9/1/2021
T10–21	3–LANE PRIMARY INDUSTRIAL I	8/30/2004	9/1/2021
T10–22	2–LANE SECONDARY INDUSTRIAL	8/30/2004	9/1/2021
T10–23	2–LANE LOCAL INDUSTRIAL	8/30/2004	9/1/2021
T10–24A	NARROW LOT STREET PLAN DETAIL	2/12/2007	9/1/2021
T10–24B	NARROW LOT STREET SECTION	2/12/2007	9/1/2021
T10–25A	NARROW LOT ALLEY PLAN DETAIL	2/12/2007	9/1/2021
T10–25B	NARROW LOT ALLEY SECTION	2/12/2007	9/1/2021
TC#	**TRAFFIC CONTROL PLANS**		
TC1	TRAFFIC CONTROL DETAIL – ONE–LANE, TWO–WAY TRAFFIC CONTROL WITH FLAGGERS	3/15/2016	9/1/2021
TC2	TRAFFIC CONTROL DETAIL – PILOT CAR OPERATION	3/15/2016	9/1/2021
TC3	TRAFFIC CONTROL DETAIL – SINGLE–LANE CLOSURE FOR MULTI–LANE ROADWAYS	3/15/2016	9/1/2021
TC4	TRAFFIC CONTROL DETAIL – DOUBLE–LANE CLOSURE FOR MULTI–LANE ROADWAYS	3/15/2016	9/1/2021
TC5	TRAFFIC CONTROL DETAIL – SHOULDER CLOSURE – LOW SPEED (40 MPH OR LESS)	3/15/2016	9/1/2021
TC6	TRAFFIC CONTROL DETAIL – SHOULDER CLOSURE HIGH SPEED	3/15/2016	9/1/2021
TC7	TRAFFIC CONTROL DETAIL – TEMPORARY OFF–RAMP FOR MULTI–LANE ROADWAYS	3/15/2016	9/1/2021
TC8	TRAFFIC CONTROL DETAIL – TEMPORARY ON–RAMP FOR MULTI–LANE ROADWAYS	3/15/2016	9/1/2021
TC9	TRAFFIC CONTROL DETAIL – TEMPORARY ON–RAMP FOR MULTI–LANE ROADWAYS	3/15/2016	9/1/2021
TC10	TRAFFIC CONTROL DETAIL – RIGHT LANE CLOSURE WITH SHIFT – 5 LANE ROADWAYS	3/15/2016	9/1/2021
TC11	TRAFFIC CONTROL DETAIL – LEFT LANE AND CENTER TURN LANE – 5 LANE ROADWAYS	3/15/2016	9/1/2021
TC12	TRAFFIC CONTROL DETAIL – LANE SHIFT – 3 LANE ROADWAYS	3/15/2016	9/1/2021
TC13	TRAFFIC CONTROL DETAIL – SHORT TERM RAMP CLOSURES	3/15/2016	9/1/2021

APPROVED BY: TRAFFIC ENGINEER MANAGER

APPROVED BY: ENGINEER MANAGER

INDEX 4

I:\CITYAPPS\AUTOCAD\STD_DETAILS\DRAWING_FILES\INDEX4.DWG

TRANSPORTATION STANDARD PLANS

WEB SITE:
http://www.cityofvancouver.us/publicworks/page/transportation-development-review-and-capital-standard-plans-details
FTP SITE:
ftp://ftp.ci.vancouver.wa.us/Trans/transportation_standards/std_details/

CITY OF Vancouver WASHINGTON

SHEETS

STD. PLAN NO.	TITLE	ORIGINAL RELEASE DATE	REVISED DATE
TC#	**TRAFFIC CONTROL PLANS – CONTINUED**		
TC14	TRAFFIC CONTROL DETAIL – INTERSECTION LANE CLOSURE – 3 LANE ROADWAYS	3/15/2016	9/1/2021
TC15	TRAFFIC CONTROL DETAIL – INTERSECTION LANE CLOSURE – 5 LANE ROADWAYS	3/15/2016	9/1/2021
TC16A	TRAFFIC CONTROL DETAIL – INTERSECTION PEDESTRIAN TRAFFIC CONTROL	9/13/2021	9/13/2021
TC16B	TRAFFIC CONTROL DETAIL – MID-BLOCK PEDESTRIAN TRAFFIC CONTROL	9/13/2021	9/13/2021
TC17	TRAFFIC CONTROL DETAIL – SINGLE-LANE CLOSURE WITH SHIFT	3/15/2016	9/1/2021
TC18	TRAFFIC CONTROL DETAIL – TYPICAL ROUNDABOUT FLAGGING OPERATION	3/15/2016	9/1/2021
TC19	TRAFFIC CONTROL DETAIL – INTERSECTION LANE CLOSURE 2 LANE ROADWAYS	3/31/2017	9/1/2021
TC52	TRAFFIC CONTROL DETAIL – TEMPORARY PEDESTRIAN RAMP WITH EDGE BOARD	3/15/2016	9/1/2021
TC53	TRAFFIC CONTROL DETAIL – TEMPORARY PEDESTRIAN PLATFORM WITH EDGE BOARD	3/15/2016	9/1/2021
T20–	**TRAFFIC SIGNAL DETAILS**		
	TRAFFIC SIGNAL DETAILS (ABOVE GROUND)		
T20–01	MAST ARM CONFIGURATIONS FOR TYPE II AND TYPE III TRAFFIC SIGNAL STANDARDS	1/31/2005	9/1/2021
T20–02	POLE CONFIGURATIONS FOR TYPE II, TYPE III, TYPE B AND TYPE S TRAFFIC SIGNAL STANDARDS	8/30/2004	9/1/2021
T20–03	RECESSED TERMINAL COMPARTMENT DETAIL FOR TYPE II, TYPE III, TYPE B AND TYPE S TRAFFIC SIGNAL STANDARDS	8/30/2004	9/1/2021
T20–04	TYPE I, TYPE I-D AND TYPE I-DT TRAFFIC SIGNAL STANDARDS	8/30/2004	9/1/2021
T20–05	TYPE PS AND TYPE PPB TRAFFIC SIGNAL STANDARDS	8/30/2004	9/1/2021
T20–06A	DOUBLE DIAGONAL RAMP PLACEMENT FOR TRAFFIC SIGNAL STANDARD	2/12/2007	9/1/2021
T20–06B	DOUBLE DIRECTIONAL RAMP PLACEMENT FOR TRAFFIC SIGNAL STANDARDS	2/12/2007	9/1/2021
T20–06C	DOUBLE PARALLEL RAMP PLACEMENT FOR TRAFFIC SIGNAL STANDARDS	2/12/2007	9/1/2021
T20–07	OVERHEAD STREET NAME SIGN MOUNTING AND FABRICATION DETAILS	8/30/2004	9/1/2021
T20–08	OVERHEAD SIGN MOUNTING DETAILS	8/30/2004	9/1/2021
~~T20–09A~~	~~"H" MOUNT ADA PEDESTRIAN PUSH BUTTON ASSEMBLY~~ **DISCONTINUED**	3/15/2006	4/2/2018
T20–09B	ADA PEDESTRIAN AUDIBLE PUSH BUTTON ASSEMBLY	8/30/2004	9/1/2021
~~T20–09C~~	~~AUDIBLE PEDESTRIAN SIGNAL DETAIL~~ **DISCONTINUED**	7/1/2014	4/2/2018
T20–09D	PEDESTRIAN COUNTDOWN SIGNAL HEAD OPTIONS	7/1/2014	9/1/2021
T20–09E	PEDESTRIAN PUSHBUTTON MOUNTING EXTENSION	3/31/2017	9/1/2021
T20–10A	PUSH BUTTON MARKING OPTIONS	3/15/2006	9/1/2021
~~T20–10B~~	~~PUSH BUTTON MARKING OPTIONS FOR PEDESTRIAN WARNING~~ **DISCONTINUED**	3/15/2006	2/1/2021
T20–11A	COMBINATION PRE-EMPTION DETECTOR/INDICATOR MOUNTING DETAILS	1/1/2015	9/1/2021
T20–11B	GPS OPTICOM INSTALLATION	1/1/2015	9/1/2021
T20–12	MOUNTING BRACKET ASSEMBLY WITH TENON CLAMP	8/30/2004	9/1/2021
T20–13	END OF ARM TENON AND COUPLING CONNECTION	8/30/2004	9/1/2021
T20–14	SIGN AND FLASHER ASSEMBLY	8/30/2004	9/1/2021
T20–15	TYPE II, TYPE III, TYPE B AND TYPE S TRAFFIC SIGNAL POLE FOUNDATION DETAIL	8/15/2008	9/1/2021
T20–16	TYPE PPB, TYPE PS AND TYPE I TRAFFIC SIGNAL POLE FOUNDATION	8/15/2008	9/1/2021
T20–17A	JUNCTION BOX AND HAND HOLE BOX	2/1/2021	9/1/2021
T20–17B	JUNCTION BOX/HAND HOLE BOX APRON	2/1/2021	9/1/2021
T20–	**TRAFFIC DETECTION DETAILS**		
T20–30	TYPICAL DETECTOR LAYOUT	8/30/2004	9/1/2021
T20–31	LOOP CONSTRUCTION DETAILS	8/30/2004	9/1/2021
T20–32	DETECTOR LOOP WINDING DETAILS	8/30/2004	9/1/2021
T20–33	LOOP NUMBERING, LOOP DETECTOR CONFIGURATION AND SAWCUT DETAILS	8/30/2004	9/1/2021
T20–34	DETECTOR LOOP POSITION DETAILS	8/30/2004	9/1/2021
T20–35A	INPUT TERMINAL FOR "P" CABINET DETECTION PANEL ASSEMBLY	8/30/2004	9/1/2021
T20–35B	INPUT TERMINAL FOR "MSX" CABINET DETECTION PANEL ASSEMBLY	1/31/2005	9/1/2021
T20–37A	VIDEO CAMERA MOUNTING DETAILS	8/30/2004	9/1/2021
T20–37B	VIDEO CAMERA MOUNTING ON MAST ARM DETAILS	7/1/2014	9/1/2021
T20–37C	VIDEO CAMERA MOUNTING ON SAFETY LIGHT DETAILS	7/1/2014	9/1/2021
T20–37D	FISHEYE VIDEO CAMERA MOUNTING ON MAST ARM DETAILS	4/2/2018	9/1/2021
~~T20–38A~~	~~TYPICAL SINGLE DOOR CABINET PAD INSTALLATION DETAILS~~ **DISCONTINUED**	3/31/2017	4/2/2018
T20–38B	TYPICAL FRONT AND BACK DOOR CABINET PAD INSTALLATION DETAILS	3/31/2017	9/1/2021
~~T20–38C~~	~~TYPICAL SINGLE DOOR "P" CABINET DETAILS~~ **DISCONTINUED**	3/31/2017	4/2/2018

APPROVED BY: TRAFFIC ENGINEER MANAGER

INDEX 5

I:\CITYAPPS\AUTOCAD\STD_DETAILS\DRAWING_FILES\INDEX5.DWG

TRANSPORTATION STANDARD PLANS

WEB SITE:
http://www.cityofvancouver.us/publicworks/page/transportation-development-review-and-capital-standard-plans-details
FTP SITE:
ftp://ftp.ci.vancouver.wa.us/Trans/transportation_standards/std_details/

CITY OF Vancouver WASHINGTON

SHEETS

STD. PLAN NO.	TITLE	ORIGINAL RELEASE DATE	REVISED DATE
T20-	**TRAFFIC DETECTION DETAILS CONTINUED**		
T20-38D	TYPICAL FRONT AND BACK DOOR "P" CABINET DETAILS	3/31/2017	9/1/2021
T20-38E	CONTROLLER CABINET FOUNDATION	4/2/2018	9/1/2021
T20-39A	TRAFFIC SIGNAL SERVICE CABINET DETAILS	8/30/2004	9/1/2021
T20-39B	TRAFFIC SIGNAL SERVICE WIRING DIAGRAM	8/30/2004	9/1/2021
T20-40A	TRAFFIC SIGNAL SERVICE WITH BATTERY BACKUP ELECTRICAL CABINET DETAIL	8/30/2004	9/1/2021
T20-40B	TRAFFIC SIGNAL SERVICE WITH BATTERY BACKUP WIRING DIAGRAM	8/30/2004	9/1/2021
T20-41	SERVICE ENCLOSURE REQUIREMENTS	8/30/2004	9/1/2021
T20-42A	TYPE "P" CABINET INTERIOR LAYOUT (BACK)	8/30/2004	9/1/2021
T20-42B	TYPE "P" CABINET INTERIOR LAYOUT (DOOR)	8/30/2004	9/1/2021
T20-42C	TYPE "P" CABINET INTERIOR LAYOUT (LEFT SIDE)	8/30/2004	9/1/2021
T20-42D	TYPE "P" CABINET INTERIOR LAYOUT (RIGHT SIDE)	8/30/2004	9/1/2021
T20-42E	TYPE "P" DETECTION ASSIGNMENTS FOR CARD CAGE	1/31/2005	9/1/2021
T20-43A	TYPE "MSX" CABINET INTERIOR LAYOUT (BACK)	1/31/2005	9/1/2021
T20-43B	TYPE "MSX" CABINET INTERIOR LAYOUT (DOOR)	1/31/2005	9/1/2021
T20-43C	TYPE "MSX" CABINET INTERIOR LAYOUT (LEFT SIDE)	1/31/2005	9/1/2021
T20-43D	TYPE "MSX" CABINET INTERIOR LAYOUT (RIGHT SIDE)	1/31/2005	9/1/2021
T20-43E	TYPE "MSX" DETECTION ASSIGNMENTS FOR CARD CAGE	1/31/2005	9/1/2021
T20-44	P CABINET AND MSX CABINET "D" CONNECTORS	1/31/2005	9/1/2021
T20-45A	"COV 44 D" FOR 2070N, NEMA X3, AND XN-2 "D" CONNECTOR AND PIN ASSIGNMENTS	2/12/2007	9/1/2021
T20-45B	9800ATC T2 "D" CONNECTOR AND PIN ASSIGNMENTS	2/12/2007	9/1/2021
T20-46A	TYPE "M" HAWK SIGNAL CABINET INTERIOR LAYOUT (BACK)	7/1/2014	9/1/2021
T20-46B	TYPE "M" HAWK SIGNAL CABINET INTERIOR LAYOUT (DOOR)	7/1/2014	9/1/2021
T20-46C	TYPE "M" HAWK SIGNAL CABINET INTERIOR LAYOUT (LEFT SIDE)	7/1/2014	9/1/2021
T20-46D	TYPE "M" HAWK SIGNAL CABINET INTERIOR LAYOUT (RIGHT SIDE)	7/1/2014	9/1/2021
T20-46E	TYPE "M" HAWK SIGNAL DETECTION ASSIGNMENTS FOR CARD CAGE	7/1/2014	9/1/2021
T20-47	POLARA APS NAVIGATOR INTERCONNECT BOARD AND WIRING HARNESS	1/1/2015	9/1/2021
T21-	**LIGHTING**		
T21-01A	CITY STREET LIGHTING REQUIREMENTS SCHEDULE LUMINANCE METHOD (STRAIGHT SECTIONS)	1/1/2015	9/1/2021
T21-01B	CITY STREET LIGHTING REQUIREMENTS SCHEDULE ILLUMINANCE METHOD (CURVED SECTIONS)	1/1/2015	9/1/2021
T21-01C	CITY STREET LIGHTING REQUIREMENTS INTERSECTION ILLUMINANCE	1/1/2015	9/1/2021
T21-01D	CITY STREET LIGHTING REQUIREMENTS NOTES	1/1/2015	9/1/2021
T21-02	TYPE A AND TYPE AT LIGHTING STANDARDS	8/30/2004	9/1/2021
~~T21-03~~	~~TYPE A AND TYPE AT RESIDENTIAL LIGHTING STANDARDS~~ **DISCONTINUED**	8/30/2004	7/1/2019
T21-04	TYPE D LIGHTING STANDARD	8/30/2004	9/1/2021
~~T21-05~~	~~TYPE DT LIGHTING STANDARD~~ **DISCONTINUED**	8/30/2004	7/1/2019
T21-06	TYPE O LIGHTING STANDARD	8/30/2004	9/1/2021
T21-07	TYPE P AND TYPE R LIGHTING STANDARD	8/30/2004	9/1/2021
T21-08	TYPE N LIGHTING STANDARD	8/30/2004	9/1/2021
~~T21-09~~	~~PAINTING DETAILS FOR TYPE D AND TYPE DT LIGHT STANDARDS~~ **DISCONTINUED**	8/30/2004	7/1/2019
T21-10A	TYPE A - STEEL LIGHT POLE FOUNDATION	2/1/2021	9/1/2021
T21-10B	DIRECT BURIAL FOR STREET LIGHTING STANDARDS	8/15/2008	9/1/2021
T21-11A	PRECAST FOUNDATION FOR STREET LIGHTING	1/1/2015	9/1/2021
T21-11B	CAST-IN-PLACE FOUNDATION FOR STREET LIGHTING	1/1/2015	9/1/2021
T21-12	STREET LIGHTING GROUNDING DETAILS AND "V" DISCONNECT - FUSED FOR AWG	8/30/2004	9/1/2021
T21-13	SHEPHERDS HOOK DETAIL FOR TYPE O AND TYPE P STREET LIGHTING STANDARDS	8/30/2004	9/1/2021
T21-14A	VANDAL RESISTANT BOLLARD (LIGHTED AND NON-LIGHTED)	2/12/2007	9/1/2021
T21-14B	TYPICAL CONNECTING PUBLIC STREET WITH PATHWAYS AND LIGHTING	2/12/2007	9/1/2021
T21-15A	STREET LIGHT CONTACTOR CABINET	8/30/2004	9/1/2021
T21-15B	STREET LIGHT CONTACTOR SERVICE WIRING DIAGRAM	8/30/2004	9/1/2021
T21-16	LIGHTING STANDARD POSITION OPTIONS	1/1/2015	9/1/2021
T21-17	SAFETY LIGHTING DIMMING CIRCUIT DETAIL	2/1/2021	9/1/2021
T21-18A	STREET LIGHT DISCONNECT DETAIL	2/1/2021	9/1/2021
T21-18B	STREET LIGHT DISCONNECT DETAIL	2/1/2021	9/1/2021

APPROVED BY: TRAFFIC ENGINEER MANAGER

INDEX 6

I:\CITYAPPS\AUTOCAD\STD_DETAILS\DRAWING_FILES\INDEX6.DWG

TRANSPORTATION STANDARD PLANS

WEB SITE:
http://www.cityofvancouver.us/publicworks/page/transportation-development-review-and-capital-standard-plans-details
FTP SITE:
ftp://ftp.ci.vancouver.wa.us/Trans/transportation_standards/std_details/

CITY OF Vancouver WASHINGTON

SHEETS

STD. PLAN NO.	TITLE	ORIGINAL RELEASE DATE	REVISED DATE
T22-	**INTERCONNECT**		
T22-01	TYPICAL INTERCONNECT CONDUIT AND CABLE INSTALLATION	8/30/2004	9/1/2021
~~T22-02~~	~~FIBER OPTIC TERMINAL CABINET DETAIL~~ **DISCONTINUED**	8/30/2004	2/1/2021
T22-03	INTERCONNECT JUNCTION BOX TO PULL BOX DETAIL	8/30/2004	9/1/2021
~~T22-03B~~	~~FIBER OPTIC SPLICE VAULT~~ **DISCONTINUED**	8/30/2004	2/1/2021
~~T22-03C~~	~~FIBER OPTIC SPLICE ENCLOSURE AND CABLE MANAGEMENT~~ **DISCONTINUED**	8/30/2004	2/1/2021
~~T22-04~~	~~COMMUNICATIONS CABINET DETAIL~~ **DISCONTINUED**	3/15/2006	2/1/2021
T23-	**LIGHTED CROSSWALK**		
T23-01A	CABINET DETAIL FOR PEDESTRIAN CROSSING	8/30/2004	9/1/2021
T23-01B	CABINET DETAIL FOR PEDESTRIAN CROSSING WIRING DIAGRAM	8/30/2004	9/1/2021
T23-02A	RECTANGULAR RAPID FLASHING BEACON ASSEMBLY DETAIL	1/1/2015	9/1/2021
T23-02B	RECTANGULAR RAPID FLASHING BEACON FOUNDATION DETAIL	1/1/2015	9/1/2021
T23-02C	RECTANGULAR RAPID FLASHING BEACON SERVICE CABINET DETAIL	1/1/2015	9/1/2021
T23-02D	RECTANGULAR RAPID FLASHING BEACON SERVICE CABINET WIRING DIAGRAM	1/1/2015	9/1/2021
T23-03	RECTANGULAR RAPID FLASHING BEACON ASSEMBLY WITH SOLAR MOUNTED POWER SOURCE	7/1/2019	9/1/2021
T24-	**SCHOOL FLASHER DETAILS**		
T24-01A	SCHOOL FLASHER STANDARD DETAIL VIEWS	2/1/2021	9/1/2021
T24-01B	SCHOOL FLASHER STANDARD DETAIL CONSTRUCTION NOTES AND INDICATOR LIGHT DETAIL	2/1/2021	9/1/2021
T24-01C	SCHOOL FLASHER STANDARD DETAILS CONTROL CABINET DETAIL	2/1/2021	9/1/2021
T24-01D	SCHOOL FLASHER STANDARD DETAIL WIRING DIAGRAM	2/1/2021	9/1/2021
T24-01E	SCHOOL FLASHER STANDARD DETAIL OPTIONAL INSTALLATION ON EXISTING LIGHT POLE AND SERVICE CONNECTION OPTIONS	2/1/2021	9/1/2021
T29-	**SIGNING AND STRIPING**		
	SIGNING DETAILS		
T29-01	GROUND MOUNTED STREET NAME SIGN	8/30/2004	9/1/2021
T29-02	GROUND MOUNTED SIGN DETAILS	8/30/2004	9/1/2021
T29-03	SIGN LOCATION DETAILS	8/30/2004	9/1/2021
T29-04	STREET NAME SIGN PLACEMENT AT "T" INTERSECTIONS	8/30/2004	9/1/2021
T29-05	STREET NAME SIGN PLACEMENT AT 4-WAY INTERSECTIONS	8/30/2004	9/1/2021
T29-06	STREET NAME SIGN PLACEMENT AT ANGLED AND CURVED INTERSECTIONS	8/30/2004	9/1/2021
T29-07A	STREET NAME SIGN PLACEMENT AT "SPECIAL CONDITIONS" INTERSECTIONS	8/30/2004	9/1/2021
T29-07B	STREET NAME SIGN PLACEMENT AT "SPECIAL CONDITIONS" INTERSECTIONS	8/30/2004	9/1/2021
T29-08	SIGN TOPPER DETAIL	1/31/2005	9/1/2021
T29-09	NO PARKING FIRE LANE SIGN DETAIL	1/31/2005	9/1/2021
T29-10	STOP HERE FOR PEDESTRIAN SIGN DETAIL	3/15/2006	9/1/2021
	SIGNING AND STRIPING DETAILS		
T29-20	SIGNING AND STRIPING GENERAL NOTES	8/30/2004	9/1/2021
T29-21	PAVEMENT WITH TRANSITION SIGNS AND MARKINGS	8/30/2004	9/1/2021
T29-22	TYPICAL SIGNING FOR SCHOOL AREA TRAFFIC CONTROL WITH RAISED CROSSWALK	8/30/2004	9/1/2021
T29-23	TYPICAL SIGNING FOR SCHOOL AREA TRAFFIC CONTROL	8/30/2004	9/1/2021
T29-24	STOP SIGN, STOP BAR AND CROSSWALK LOCATIONS DETAILS	8/30/2004	9/1/2021
	STRIPING DETAILS		
T29-40	STOP BAR AND YIELD LINE MARKINGS	8/30/2004	9/1/2021
T29-41	CROSSWALKS LINE MARKINGS	8/30/2004	9/1/2021
T29-42	TRIANGLE SPEED BUMP LEGEND AND BUMP LEGEND AT RAISED CROSSWALK	8/30/2004	9/1/2021
T29-43	BIKE LANE MARKINGS AND LEGENDS	8/30/2004	9/1/2021
T29-44	WHITE LANE LINE MARKINGS	8/30/2004	9/1/2021
T29-45	YELLOW CENTERLINE MARKINGS	8/30/2004	9/1/2021
T29-46	TWO-WAY LEFT TURN LANE MARKINGS	8/30/2004	9/1/2021
T29-47	STRIPED MEDIAN MARKINGS	8/30/2004	9/1/2021
T29-48	CENTER LINE AND EDGE LINE MARKINGS	8/30/2004	9/1/2021
T29-49	SKIP LINE AND EXTENSION LINE MARKINGS	8/30/2004	9/1/2021
T29-50	ON-STREET PARALLEL PARKING STALL MARKINGS	8/30/2004	9/1/2021
T29-51	ON-STREET AND PARKING FACILITY ANGLE PARKING STALL MARKINGS	8/30/2004	9/1/2021

APPROVED BY: TRAFFIC ENGINEER MANAGER

INDEX 7

I:\CITYAPPS\AUTOCAD\STD_DETAILS\DRAWING_FILES\INDEX7.DWG

TRANSPORTATION STANDARD PLANS

WEB SITE:
http://www.cityofvancouver.us/publicworks/page/transportation-development-review-and-capital-standard-plans-details
FTP SITE:
ftp://ftp.ci.vancouver.wa.us/Trans/transportation_standards/std_details/

CITY OF Vancouver WASHINGTON

SHEETS

STD. PLAN NO.	TITLE	ORIGINAL RELEASE DATE	REVISED DATE
STRIPING DETAILS CONTINUED			
T29-52A	ANGLE BACK-IN PARKING STRIPING	3/15/2006	9/1/2021
T29-52B	ANGLE BACK-IN PARKING SIGNING	3/15/2006	9/1/2021
T29-53	RIGHT TURN AND LEFT TURN ARROW MARKINGS	8/30/2004	9/1/2021
T29-54	THRU-RIGHT AND THRU-LEFT TURN ARROW MARKINGS	8/30/2004	9/1/2021
T29-55	TWO-WAY LEFT TURN ARROW MARKINGS	8/30/2004	9/1/2021
T29-56	THRU LANE ARROW MARKINGS	8/30/2004	9/1/2021
T29-57	"ONLY" LEGEND AND "STOP" LEGEND MARKINGS	8/30/2004	9/1/2021
T29-58	"SCHOOL" LEGEND MARKINGS	8/30/2004	9/1/2021
T29-59	"BUS" LEGEND MARKINGS	8/30/2004	9/1/2021
T29-60	RAILROAD CROSSING LEGEND MARKINGS	8/30/2004	9/1/2021
T29-61	BICYCLE STENCIL FOR SHARED USE ROADWAYS	8/30/2004	9/1/2021
T29-62	TRANSVERSE MEDIAN MARKINGS	8/30/2004	9/1/2021
T29-63A	BIKE CORRAL LAYOUT	3/15/2016	9/1/2021
T29-63B	BIKE CORRAL BICYCLE RACK DETAIL	3/15/2016	9/1/2021
T29-64	TUBULAR MARKER DETAIL	3/15/2016	9/1/2021

APPROVED BY: TRAFFIC ENGINEER MANAGER

I:\CITYAPPS\AUTOCAD\STD_DETAILS\DRAWING_FILES\INDEX7.DWG

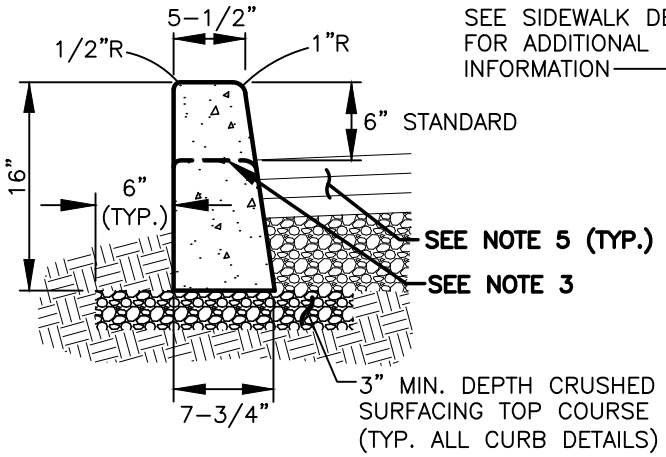

TYPE E-1 CURB

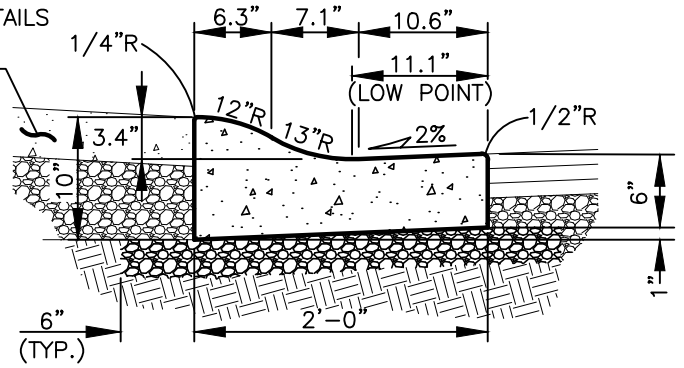

ROLLED CURB AND GUTTER

USE OF ROLLED CURB AND GUTTER PERMITTED IN CUL-DE-SAC BULBS ROAD MODIFICATION REQUIRED FOR OTHER USES.

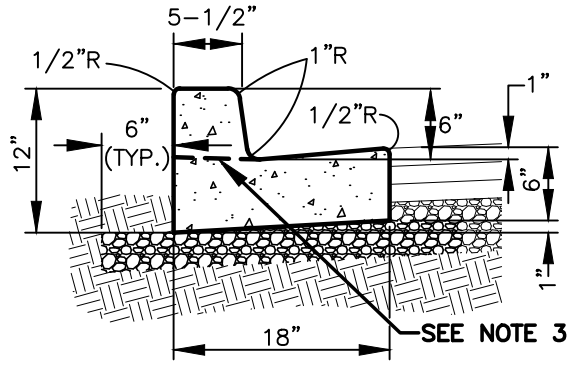

TYPE A-1 CURB AND GUTTER

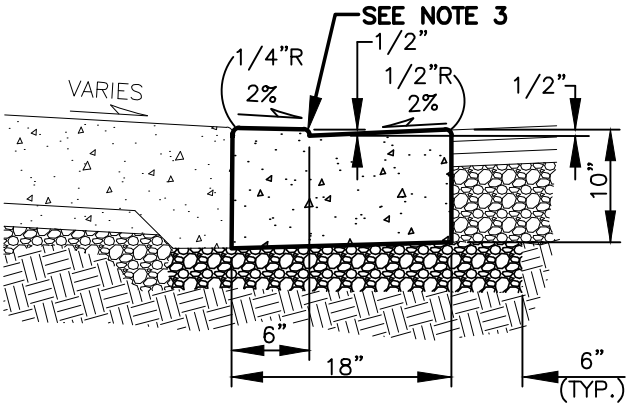

CURB AND GUTTER AT DRIVEWAY DROP

NOTES:

1. CONCRETE CURBS SHALL BE 3000 PSI MIN. (CL 3000), 3-1/2" SLUMP (MAX.), DRIVEWAY OPENINGS SHALL BE 4000 PSI MIN. (CL 4000).
2. CURBS ADJACENT TO PAVEMENT OR SIDEWALK SHALL HAVE EXPANSION AND/OR CONSTRUCTION JOINTS TO MATCH EXISTING PATTERNS. 3/8" EXPANSION JOINTS SHALL BE PLACED ON BOTH SIDES OF CATCH BASINS, AT TOPS OF DRIVEWAYS, ALL CHANGES IN DIRECTION, AND AS DIRECTED BY THE INSPECTOR. CONTRACTION JOINTS TO BE PLACED AT 15' MAXIMUM SPACING.
3. FOR CURB DROPS AT DRIVEWAYS 1/2" LIP WITH A 1/2" TOOLED EDGE, SEE **RAMP LIP, DRIVEWAY LIP AND DETECTABLE WARNING PATTERN DETAIL T02-15**.

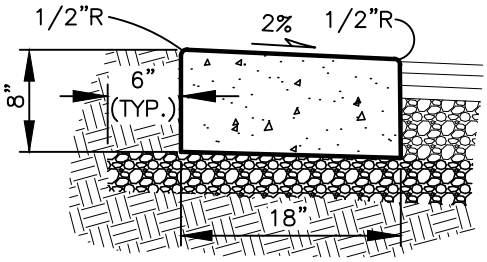

FLAT CURB EDGE DETAIL FOR NARROW ALLEY WAYS

(SEE DETAILS T10-25A AND T10-25B)

4. COMPACT SUBGRADE AND CRUSHED SURFACING TOP COURSE TO 95% MAXIMUM DRY DENSITY (3" MIN. DEPTH).
5. SEE **PAVEMENT RESTORATION/WIDENING AT CURBS DETAIL T05-01A**.
6. CURB TO BE MEDIUM BROOM FINISHED, PARALLEL TO GUTTER LINE.
7. WHERE MATCHING EXISTING CURBS, ALL EXISTING EDGES SHALL BE SAWCUT.
8. WHEN ATTACHED SIDEWALKS ARE USED WITH ROLLED CURB AND GUTTER, THICKENED SIDEWALKS (6" MIN.) SHALL BE CONSTRUCTED UNDER THE SAME CONSTRUCTION CONTRACT.
9. FOR CURBS AROUND MEDIANS, USE 12" WIDE CURB OR CURB AND GUTTER. SEE **TYPICAL PEDESTRIAN REFUGE SECTION A-A DETAIL T02-17C** WHERE APPLICABLE.

REV NO.	DATE	BY	APPR
1	3/17	RAW	MHA
2	4/18	RAW	MHA
3	9/21	RAW	MHA

PUBLIC WORKS - STREETS AND TRANSPORTATION

APPROVED BY: M H Abdalla
ENGINEER MANAGER

APPROVED DATE: 9/1/2021

CITY OF Vancouver WASHINGTON

CONCRETE CURBS

STANDARD PLAN NUMBER

T01-01A

I:\CITYAPPS\AUTOCAD\STD_DETAILS\DRAWING_FILES\T01-01A

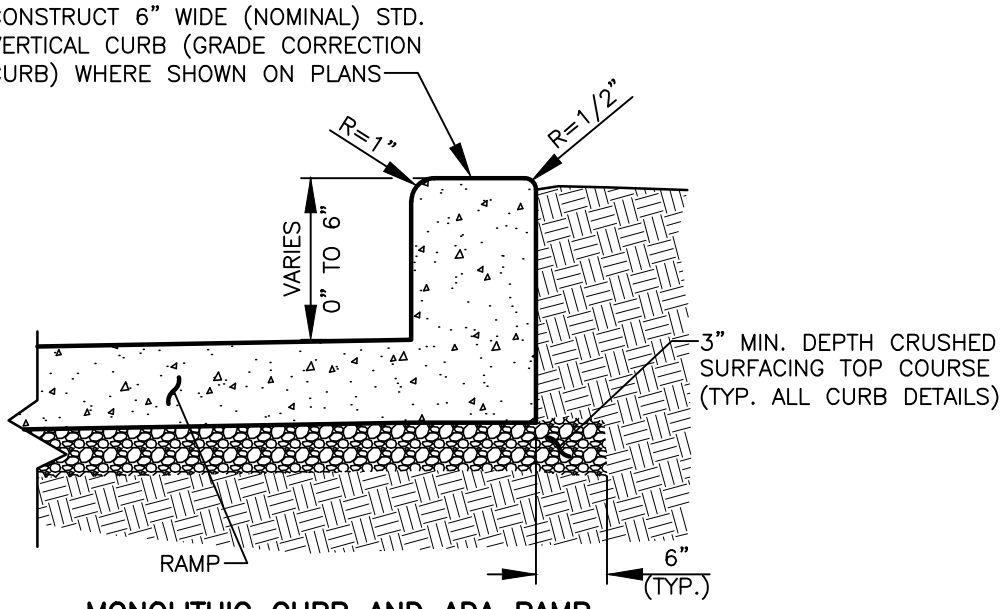

MONOLITHIC CURB AND ADA RAMP

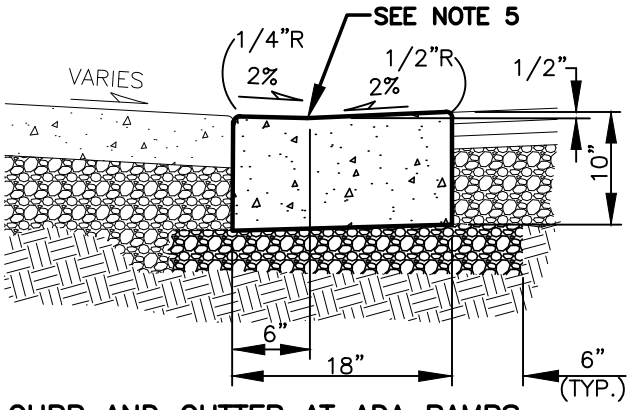

CURB AND GUTTER AT ADA RAMPS

NOTES:

1. CONCRETE CURBS SHALL BE 3000 PSI MIN. (CL 3000), 3–1/2" SLUMP (MAX.).
2. TOOLED JOINTS ARE REQUIRED AT ALL SIDEWALK RAMP SLOPE BREAK LINES.
3. WHERE ADA RAMP REQUIRES GRADE CORRECTION CURB (BACK OR SIDES), CONSTRUCT CURB AND RAMP AS MONOLITHIC POUR. CURB ALONG ROADWAY OR PARKING LOT TO BE SEPARATE CURB POURS.
4. CURBS ADJACENT TO PAVEMENT OR SIDEWALK SHALL HAVE EXPANSION AND/OR CONSTRUCTION JOINTS TO MATCH EXISTING PATTERNS. 3/8" EXPANSION JOINTS SHALL BE PLACED ON BOTH SIDES OF CATCH BASINS, AT TOPS OF DRIVEWAYS, ALL CHANGES IN DIRECTION, AND AS DIRECTED BY THE INSPECTOR. CONTRACTION JOINTS TO BE PLACED AT 15' MAXIMUM SPACING.
5. FOR CURB DROPS AT ADA RAMPS ZERO LIP FROM FLOW LINE, SEE **RAMP LIP, DRIVEWAY LIP AND DETECTABLE WARNING PATTERN DETAIL T02–15**.
6. COMPACT SUBGRADE AND CRUSHED SURFACING TOP COURSE TO 95% MAXIMUM DRY DENSITY (3" MIN. DEPTH).
7. SEE **PAVEMENT RESTORATION/WIDENING AT CURBS DETAIL T05–01A**.
8. CURB TO BE MEDIUM BROOM FINISHED, PARALLEL TO GUTTER LINE.
9. WHERE MATCHING EXISTING CURBS, ALL EXISTING EDGES SHALL BE SAWCUT.
10. WHEN ATTACHED SIDEWALKS ARE USED WITH ROLLED CURB AND GUTTER, THICKENED SIDEWALKS (6" MIN.) SHALL BE CONSTRUCTED UNDER THE SAME CONSTRUCTION CONTRACT.

REV NO.	DATE	BY	APPR
1	3/17	RAW	MHA
2	4/18	RAW	MHA
3	9/21	RAW	MHA

PUBLIC WORKS – STREETS AND TRANSPORTATION

APPROVED BY: M H Abdalla
ENGINEER MANAGER
APPROVED DATE: 9/1/2021

CITY OF Vancouver WASHINGTON

ADA RAMP CURBS

STANDARD PLAN NUMBER T01–01B

I:\CITYAPPS\AUTOCAD\STD_DETAILS\DRAWING_FILES\T01–01B

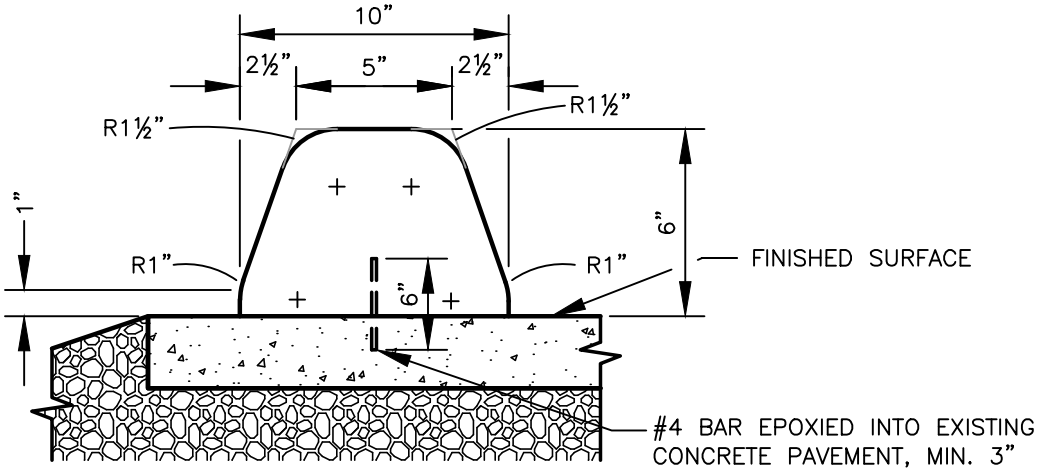

EXTRUDED CONCRETE DOWELED CURB

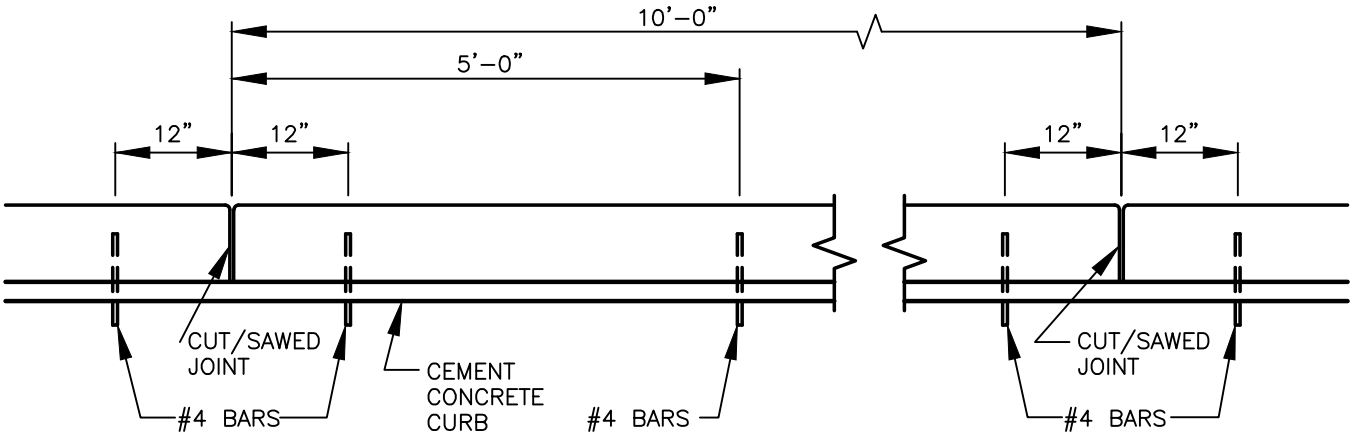

SPACING OF ANCHOR BARS

NOTES:

1. CONCRETE SHALL BE 3000 PSI MIN. (CL 3000), 3–1/2" SLUMP (MAX.).
2. FOR CONCRETE CURBS, 3/8" EXPANSION JOINTS SHALL BE PLACED ON BOTH SIDES OF CATCH BASINS, AT TOPS OF DRIVEWAYS, ALL CHANGES IN DIRECTION, OR AS DIRECTED BY INSPECTOR. 1½" CONTRACTION JOINTS TO BE PLACED AT 10' INTERVALS. SEE **CONCRETE JOINTS DETAIL T05–02**.
3. THE PAVEMENT SHALL BE DRY AND CLEANED OF LOOSE AND DELETERIOUS MATERIAL PRIOR TO PLACEMENT.
4. CONTRACTOR TO PROTECT EXTRUDED CURB UNTIL FULLY CURED.
5. TO BE USED FOR TEMPORARY USE OR ENGINEERS APPROVAL.

I:\CITYAPPS\AUTOCAD\STD_DETAILS\DRAWING_FILES\T01-02

REV NO.	DATE	BY	APPR
1	8/04	RAW	MHA
2	3/05	RAW	MHA
3	2/07	RAW	MHA
4	8/08	RAW	MHA
5	7/14	RAW	MHA
6	9/21	RAW	MHA

PUBLIC WORKS – STREETS AND TRANSPORTATION

APPROVED BY: M H Abdalla
ENGINEER MANAGER

APPROVED DATE: 9/1/2021

CITY OF Vancouver WASHINGTON

EXTRUDED CONCRETE DOWELED CURB

STANDARD PLAN NUMBER

T01–02

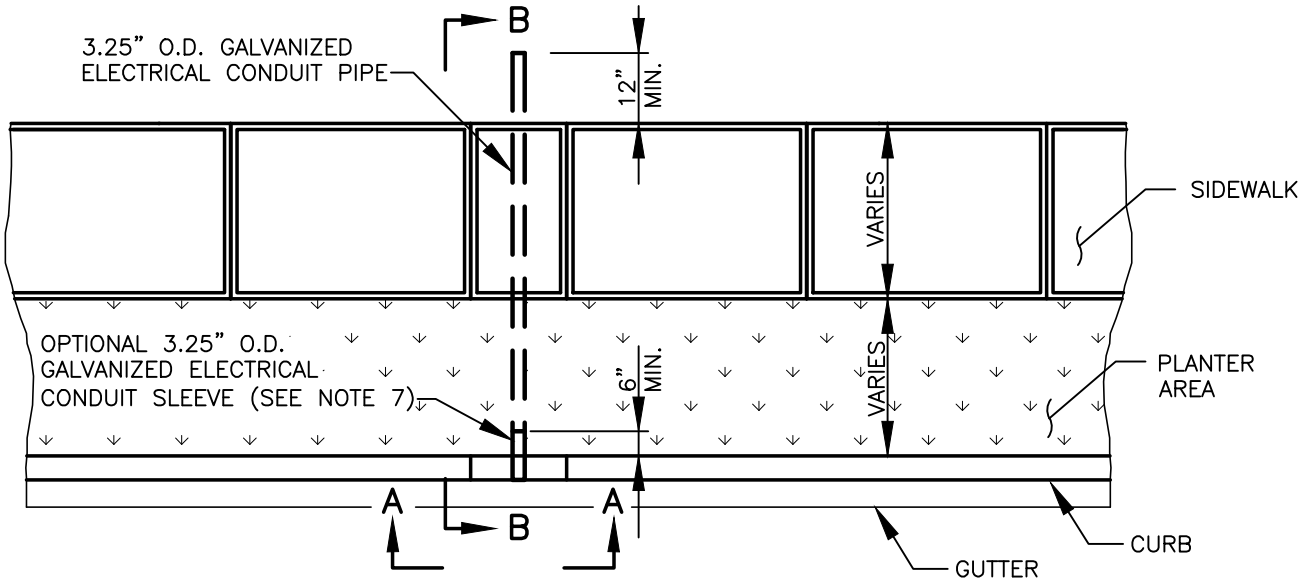

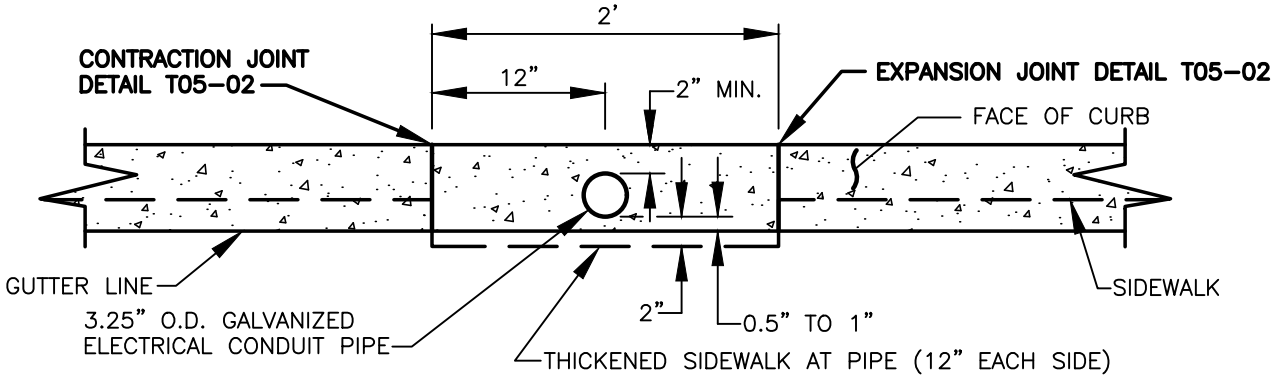

SECTION A–A

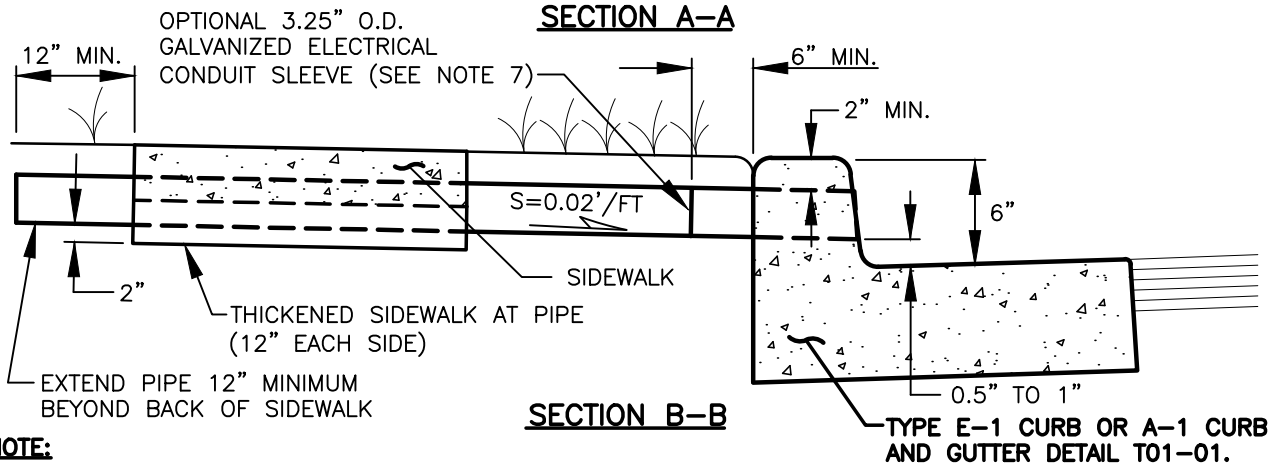

SECTION B–B

NOTE:

1. WHEN CURB DRAINS ARE USED, DRAINAGE FACILITIES MUST BE SIZED FOR BOTH QUANTITY AND QUALITY STORM WATER TREATMENT.
2. DETACHED SIDEWALK SHOWN. ATTACHED SIDEWALK AND CITY CENTER SIDEWALK SIMILAR.
3. FINISH PIPE END FLUSH WITH FACE OF CURB.
4. GROUT ANY VOIDS IN CONCRETE SURROUNDING PIPE.
5. SHOW LOCATION ON PLAN TO AVOID CONFLICT'S WITH STREET LIGHTS, FUTURE DRIVEWAY DROPS, WATER METERS AND OTHER UTILITIES.
6. CURB DRAINS NOT ALLOWED IN ROLLED CURBS.
7. CONNECT SLEEVE AND CURB DRAIN SO THAT THE CONNECTION IS WATERTIGHT.

REV NO.	DATE	BY	APPR
1	3/06	RAW	MHA
2	2/07	RAW	MHA
3	8/08	RAW	MHA
4	7/14	RAW	MHA
5	2/21	OIS	MHA
6	9/21	RAW	MHA

PUBLIC WORKS – STREETS AND TRANSPORTATION

APPROVED BY: M H Abdalla
ENGINEER MANAGER

APPROVED DATE: 9/1/2021

CITY OF Vancouver WASHINGTON

CURB DRAIN

STANDARD PLAN NUMBER

T01–03

I:\CITYAPPS\AUTOCAD\STD_DETAILS\DRAWING_FILES\T01-03

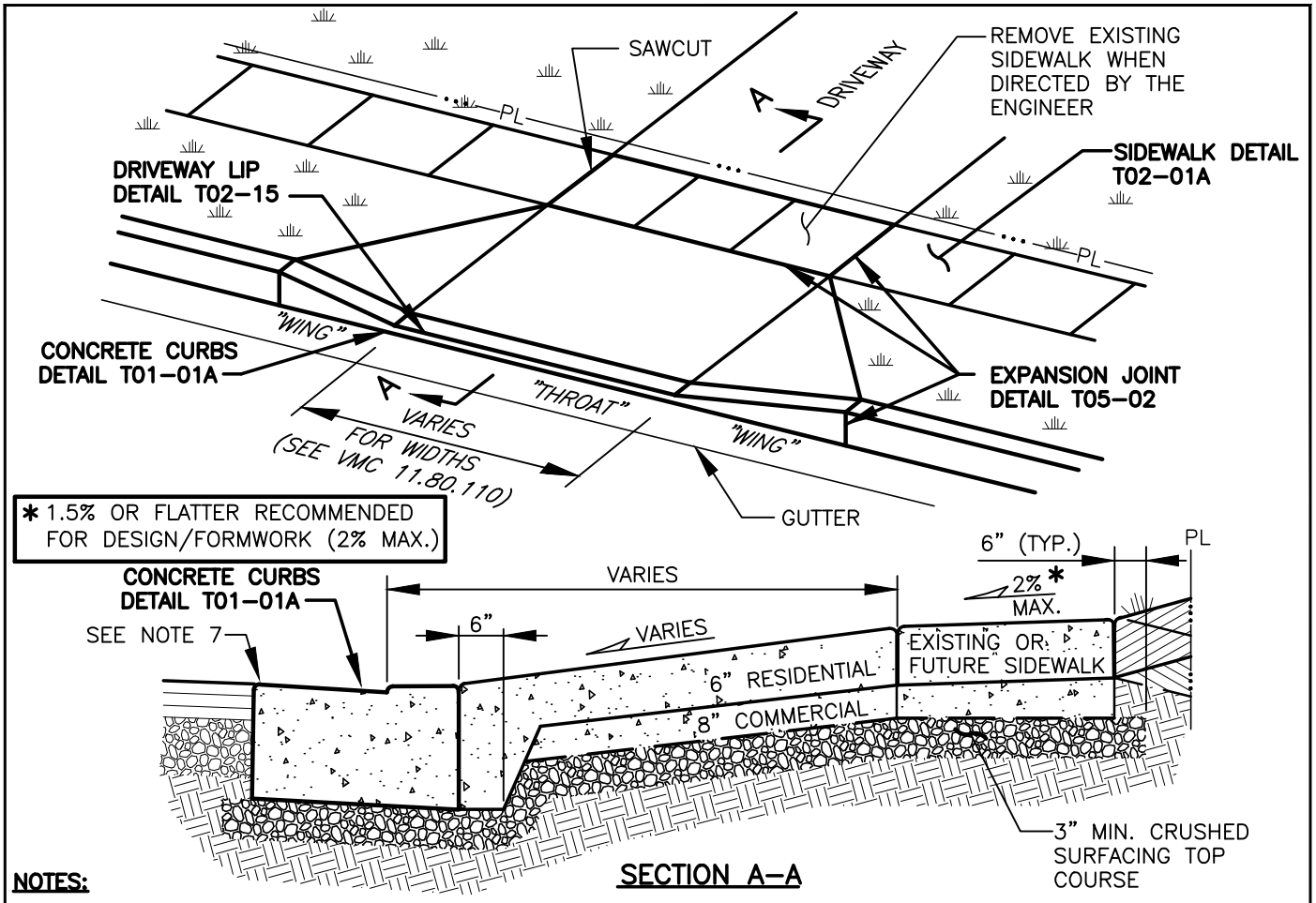

SECTION A–A

NOTES:

1. CONCRETE SHALL BE 4000 PSI MIN. (CL 4000), 3–1/2" SLUMP (MAX.), MEDIUM BROOM FINISH PARALLEL TO DRIVEWAY CENTERLINE.
2. TO BE USED WHERE CURB AND SIDEWALK ARE SEPARATED BY A PLANTER STRIP.
3. COMMERCIAL DRIVEWAYS REQUIRE 8" CONCRETE WITH REINFORCING STEEL (6x6 – W2.9xW2.9 WWF, MIN.), 1½" COVER FROM BOTTOM OF SLAB. RESIDENTIAL DRIVEWAYS REQUIRE 6" CONCRETE.
4. COMPACT SUBGRADE AND CRUSHED SURFACING TOP COURSE TO 95% OF MAXIMUM DRY DENSITY (3" MIN. DEPTH).
5. DRIVEWAYS EXCEEDING 15' IN TOTAL WIDTH SHALL HAVE ADDITIONAL LONGITUDINAL JOINTS AS DIRECTED. JOINT SPACING SHALL NOT EXCEED 15'. SEE **CONCRETE JOINTS DETAIL T05–02**.
6. EXISTING CURB SHALL BE REMOVED TO EXISTING JOINT OR SAWCUT SUCH THAT 3' MIN. OF NEW CURB IS CONSTRUCTED ADJACENT TO NEW DRIVEWAY.
7. SEE **PAVEMENT RESTORATION/WIDENING AT CURB DETAIL T05–01A** WHEN CUTTING EXISTING CURB.
8. ALL EXISTING EDGES SHALL BE SAWCUT.
9. STRUCTURAL SECTION OF DRIVEWAY TO BE EXTENDED THROUGH SIDEWALK AREA.
10. 3' WING MIN. FOR NON–ARTERIAL STREETS.
11. 45° ANGLE FOR WINGS ON ARTERIAL STREETS.
12. IF A FIRE HYDRANT OR WATER METER BOX IS SITE NEARBY, THERE SHALL BE A MIN. OF 5' BETWEEN THE EDGE OF CONCRETE (WING) AND THE FIRE HYDRANT ASSEMBLY OR METER BOX.
13. FOR RESIDENTIAL SUBDIVISIONS ONLY, THE CONTRACTOR MUST INSTALL ALL CURBS THROUGHOUT THE PROJECT AND DEFER THE CONSTRUCTION OF DRIVEWAY DROPS. DRIVEWAY DROPS WOULD THEN BE HORIZONTALLY SAWCUT INTO THE CURB FACE AT TIME OF HOUSE CONSTRUCTION.

REV NO.	DATE	BY	APPR
1	1/15	RAW	MHA
2	3/17	RAW	MHA
3	4/18	RAW	MHA
4	7/19	RAW	MHA
5	2/21	OIS	MHA
6	9/21	RAW	MHA

PUBLIC WORKS – STREETS AND TRANSPORTATION

APPROVED BY: M H Abdalla
ENGINEER MANAGER

APPROVED DATE: 9/1/2021

CITY OF Vancouver WASHINGTON

DRIVEWAY WITH DETACHED SIDEWALK

STANDARD PLAN NUMBER

T01–04

I:\CITYAPPS\AUTOCAD\STD_DETAILS\DRAWING_FILES\T01–04

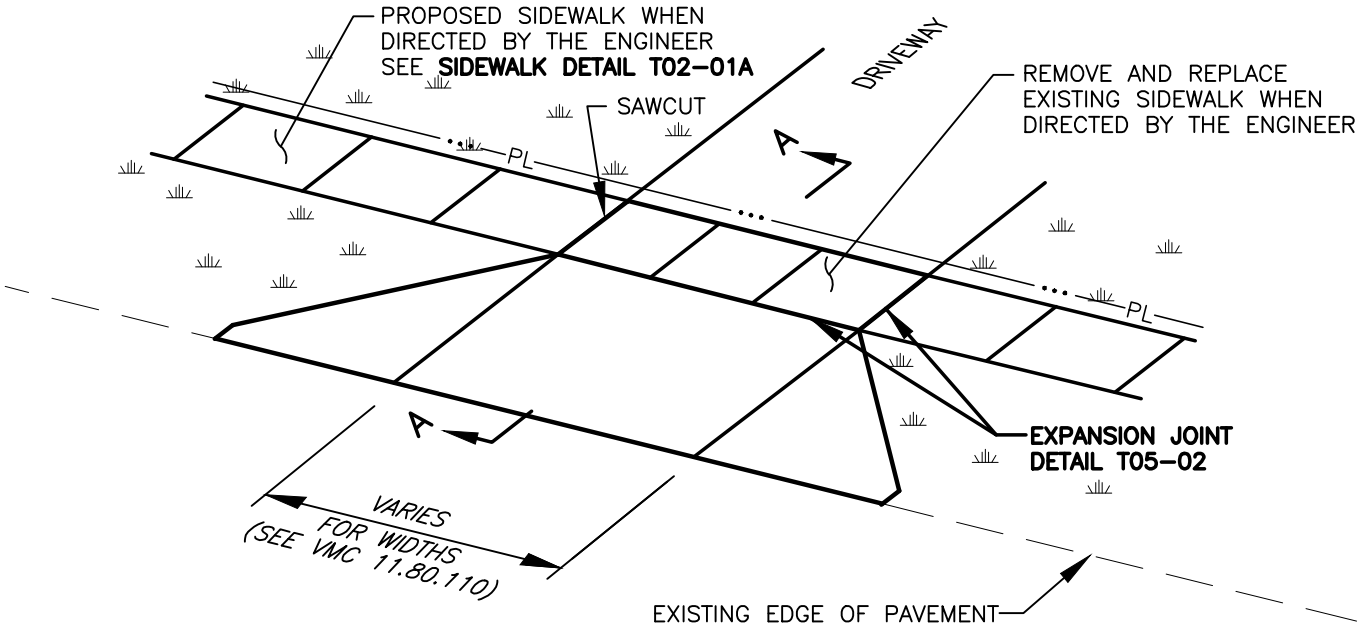

* 1.5% OR FLATTER RECOMMENDED FOR DESIGN/FORMWORK (2% MAX.)

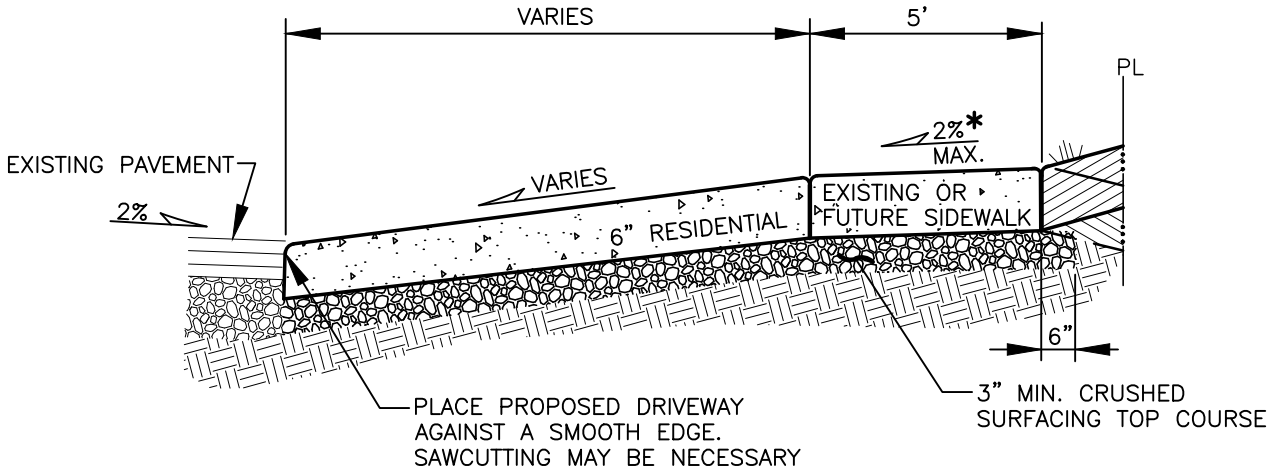

SECTION A–A

NOTES:

1. CONCRETE SHALL BE 4000 PSI MIN. (CL 4000), 3–1/2" SLUMP (MAX.), MEDIUM BROOM FINISH PARALLEL TO DRIVEWAY CENTERLINE.
2. COMPACT SUBGRADE AND CRUSHED SURFACING TOP COURSE TO 95% OF MAXIMUM DRY DENSITY (3" MIN. DEPTH).
3. DRIVEWAYS EXCEEDING 15' IN TOTAL WIDTH SHALL HAVE ADDITIONAL LONGITUDINAL JOINTS AS DIRECTED. JOINT SPACING SHALL NOT EXCEED 15'. SEE **CONCRETE JOINTS DETAIL T05–02**.
4. STRUCTURAL SECTION OF DRIVEWAY TO BE EXTENDED THROUGH SIDEWALK AREA.
5. 3' WING MIN.
6. NO WATER METERS IN DRIVEWAY APPROACH OR WING.
7. FOR SINGLE FAMILY RESIDENCE DEVELOPMENTS ALONG ROADWAYS WITH OUT CURBS.
8. IF A FIRE HYDRANT OR WATER METER BOX IS SITE NEARBY, THERE SHALL BE A MIN. OF 5' BETWEEN THE EDGE OF CONCRETE (WING) AND THE FIRE HYDRANT ASSEMBLY OR METER BOX.

REV NO.	DATE	BY	APPR
1	8/08	RAW	MHA
2	7/14	RAW	MHA
3	1/15	RAW	MHA
4	3/17	RAW	MHA
5	4/18	RAW	MHA
6	9/21	RAW	MHA

PUBLIC WORKS – STREETS AND TRANSPORTATION

APPROVED BY: M H Abdalla
ENGINEER MANAGER
APPROVED DATE: 9/1/2021

CITY OF Vancouver WASHINGTON

SINGLE FAMILY RESIDENCE DRIVEWAY WITH WINGS AND NO CURB

STANDARD PLAN NUMBER
T01–04B

I:\CITYAPPS\AUTOCAD\STD_DETAILS\DRAWING_FILES\T01–04B

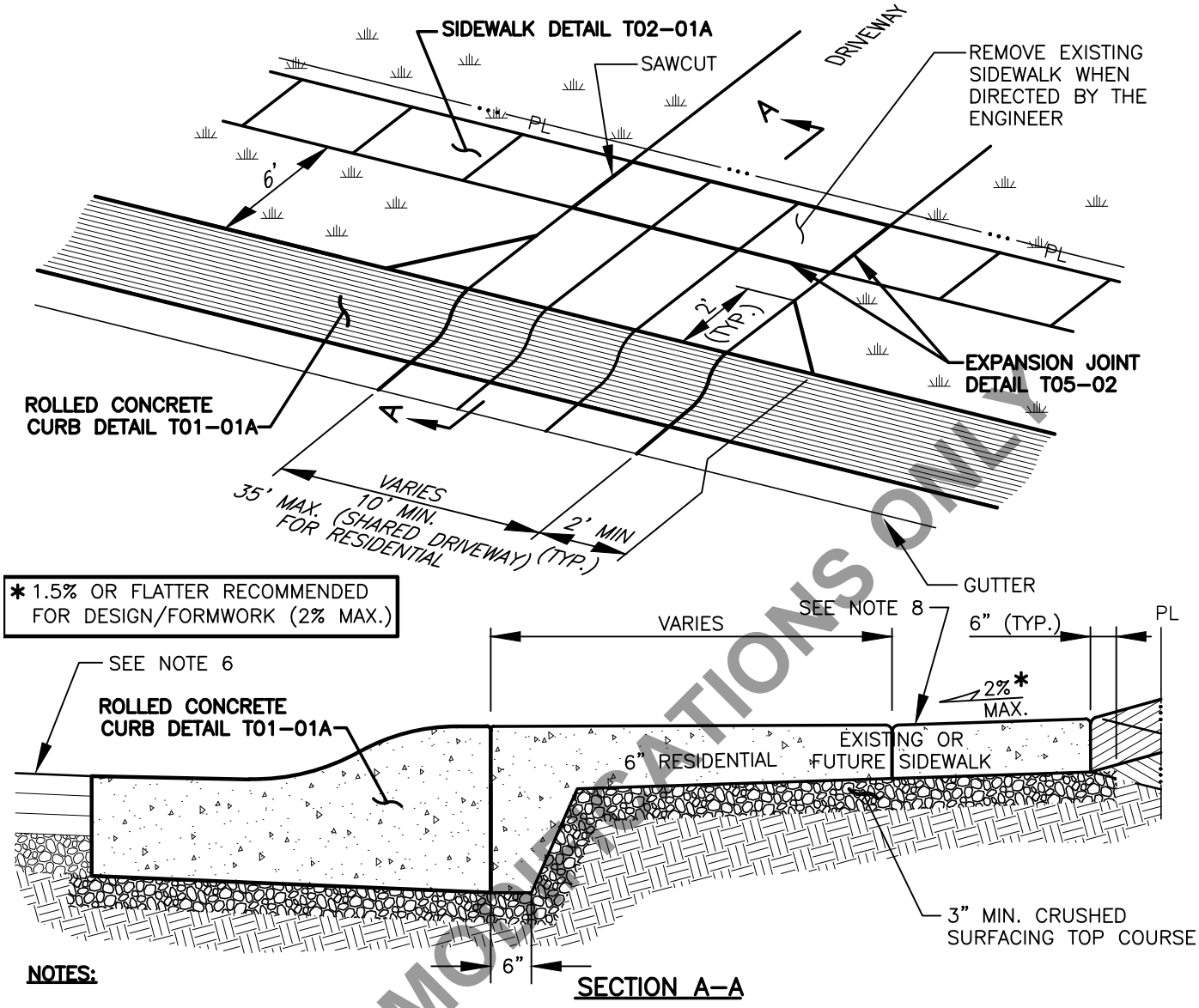

SECTION A–A

NOTES:

1. CONCRETE SHALL BE 4000 PSI MIN. (CL 4000), 3–1/2" SLUMP (MAX.), MEDIUM BROOM FINISH PARALLEL TO DRIVEWAY CENTERLINE.
2. TO BE USED WHERE CURB AND SIDEWALK ARE SEPARATED BY A PLANTER STRIP.
3. COMPACT SUBGRADE AND CRUSHED SURFACING TOP COURSE TO 95% OF MAXIMUM DRY DENSITY (3" MIN. DEPTH).
4. DRIVEWAYS EXCEEDING 15' IN TOTAL WIDTH SHALL HAVE ADDITIONAL LONGITUDINAL JOINTS AS DIRECTED. JOINT SPACING SHALL NOT EXCEED 15'. SEE **CONCRETE JOINTS DETAIL T05–02**.
5. EXISTING CURB SHALL BE REMOVED TO EXISTING JOINT OR SAWCUT SUCH THAT 3' MIN. OF NEW CURB IS CONSTRUCTED ADJACENT TO NEW DRIVEWAY.
6. SEE **PAVEMENT RESTORATION/WIDENING AT CURB DETAIL T05–01** WHEN CUTTING EXISTING CURB.
7. ALL EXISTING EDGES SHALL BE SAWCUT.
8. STRUCTURAL SECTION OF DRIVEWAY TO BE EXTENDED THROUGH SIDEWALK AREA.
9. NO WATER METERS IN DRIVEWAY APPROACH OR WINGS.
10. IF A FIRE HYDRANT OR WATER METER BOX IS SITE NEARBY, THERE SHALL BE A MIN. OF 5' BETWEEN THE EDGE OF CONCRETE (WING) AND THE FIRE HYDRANT ASSEMBLY OR METER BOX.

ROLLED CURB DRIVEWAY WITH DETACHED SIDEWALK

(T01–04C)

FOR ROAD MODIFICATIONS ONLY

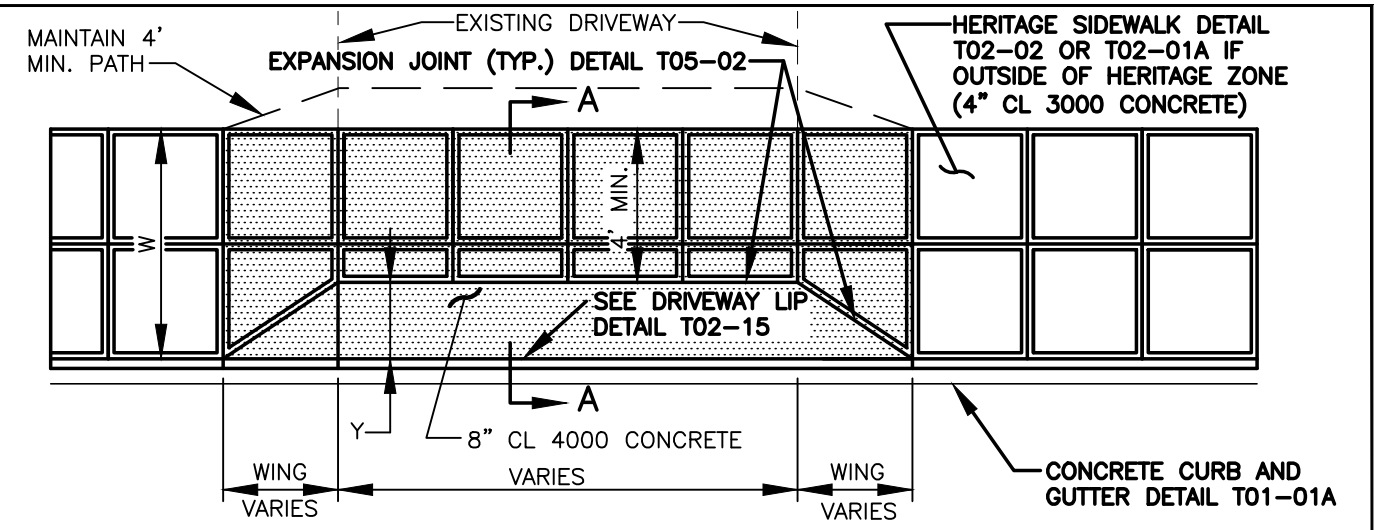

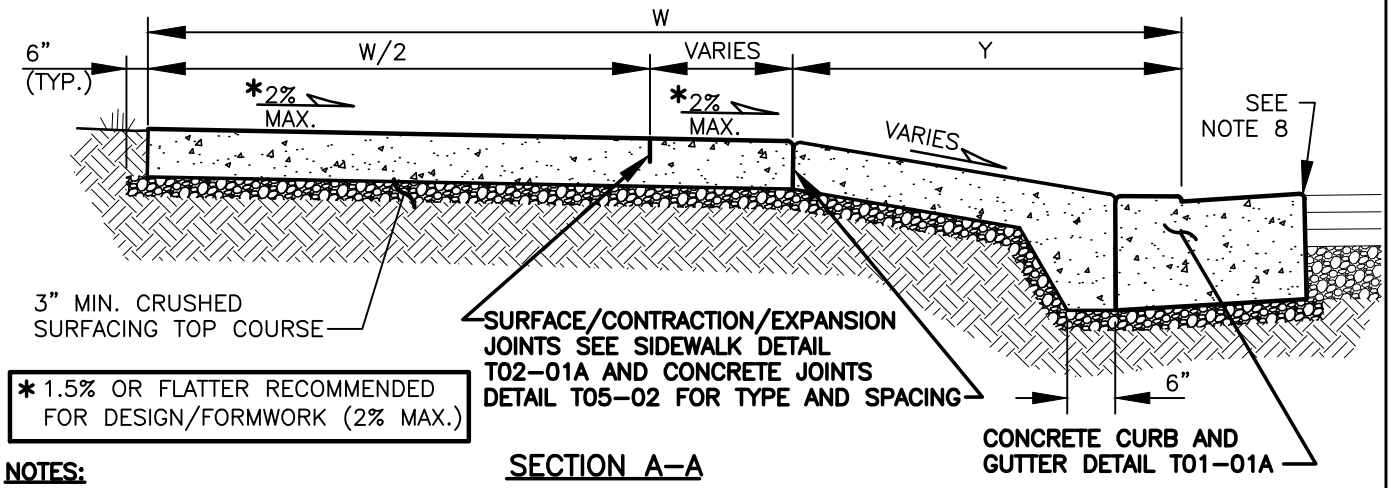

* 1.5% OR FLATTER RECOMMENDED FOR DESIGN/FORMWORK (2% MAX.)

SECTION A–A

NOTES:

1. IF W IS LESS THAN 8' IN WIDTH, THEN Y=2'. (IF W=<6', THEN PUSH OUT SIDEWALK BEHIND DRIVEWAY TO MAINTAIN 4' MIN. PATH). IF W IS MORE THAN 8' AND LESS THAN 12' IN WIDTH, THEN Y=W/2 IF W IS GREATER THAN OR EQUAL TO 12' IN WIDTH, THEN Y=4'
2. CONCRETE SHALL BE 4000 PSI MIN. (CL 4000), 3½" SLUMP (MAX.), MEDIUM BROOM FINISH PARALLEL TO DRIVEWAY CENTERLINE.
3. REINFORCING STEEL REQUIRED (6x6 – W2.9xW2.9 WWF, MIN.), MIN. 1½" COVER FROM BOTTOM OF SLAB.
4. COMPACT SUBGRADE AND CRUSHED SURFACING TOP COURSE TO 95% OF MAXIMUM DRY DENSITY (3" MIN. DEPTH).
5. DRIVEWAYS EXCEEDING 15' IN TOTAL WIDTH SHALL HAVE ADDITIONAL LONGITUDINAL JOINTS AS DIRECTED BY THE CITY INSPECTOR. JOINT SPACING SHALL NOT EXCEED 15'. SEE **CONCRETE JOINTS DETAIL T05-02**.
6. PARALLEL JOINTS SHALL BE SEPARATED BY A MINIMUM OF 2'.
7. SEE **PAVEMENT RESTORATION/WIDENING AT CURB DETAIL T05-01A** WHEN CUTTING EXISTING CURB.
8. ALL EXISTING EDGES SHALL BE SAWCUT.
9. EXISTING CURB SHALL BE REMOVED TO EXISTING JOINT OR SAWCUT SUCH THAT 3' MIN. OF NEW CURB IS CONSTRUCTED ADJACENT TO NEW DRIVEWAY.
10. IF A FIRE HYDRANT OR WATER METER BOX IS SITE NEARBY, THERE SHALL BE A MIN. OF 5' BETWEEN THE EDGE OF CONCRETE (WING) AND THE FIRE HYDRANT ASSEMBLY OR METER BOX.
11. FOR RESIDENTIAL SUBDIVISIONS ONLY, THE CONTRACTOR MUST INSTALL ALL CURBS THROUGHOUT THE PROJECT AND DEFER THE CONSTRUCTION OF DRIVEWAY DROPS. DRIVEWAY DROPS WOULD THEN BE HORIZONTALLY SAWCUT INTO THE CURB FACE AT TIME OF HOUSE CONSTRUCTION.

REV NO.	DATE	BY	APPR
1	1/16	RAW	MHA
2	3/17	RAW	MHA
3	4/18	RAW	MHA
4	7/19	RAW	MHA
5	2/21	OIS	MHA
6	9/21	RAW	MHA

PUBLIC WORKS – STREETS AND TRANSPORTATION

APPROVED BY: M H Abdalla
ENGINEER MANAGER
APPROVED DATE: 9/1/2021

CITY OF Vancouver WASHINGTON

DRIVEWAY WITH ATTACHED SIDEWALK OPTION A

STANDARD PLAN NUMBER
T01-05A

I:\CITYAPPS\AUTOCAD\STD_DETAILS\DRAWING_FILES\T01-05A

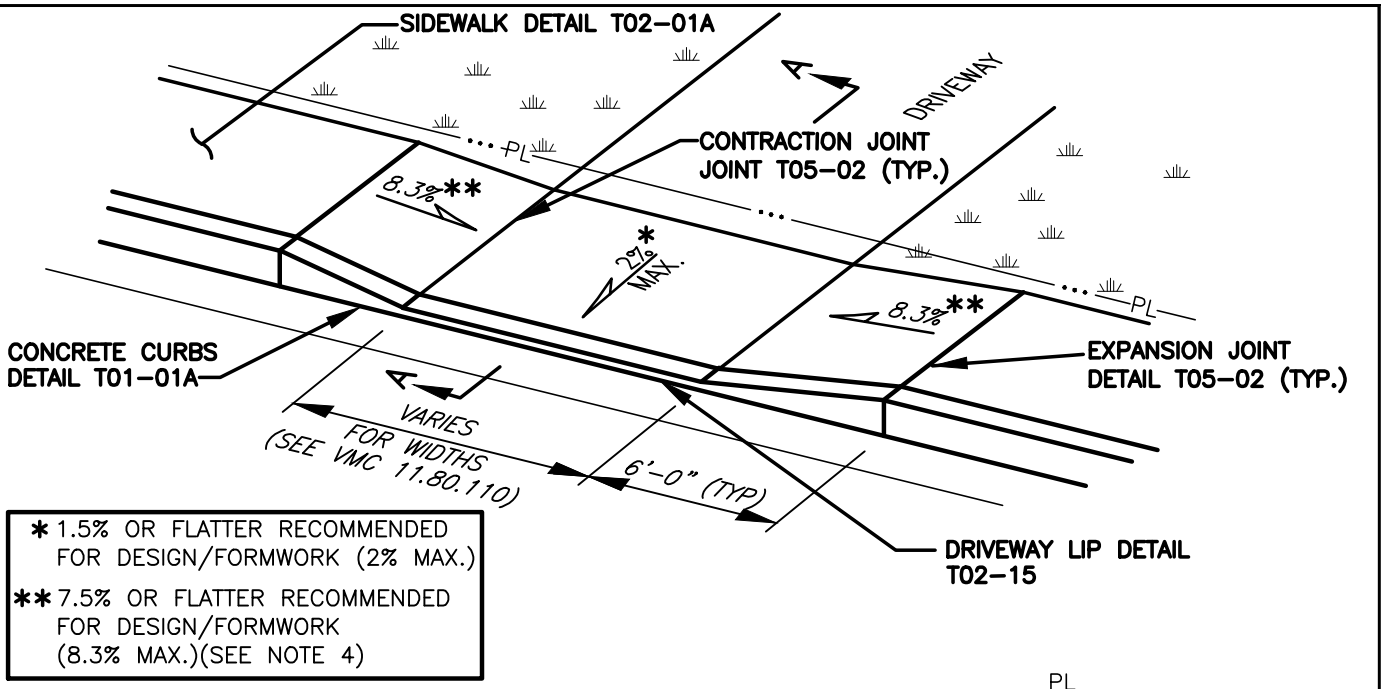

* 1.5% OR FLATTER RECOMMENDED FOR DESIGN/FORMWORK (2% MAX.)

** 7.5% OR FLATTER RECOMMENDED FOR DESIGN/FORMWORK (8.3% MAX.)(SEE NOTE 4)

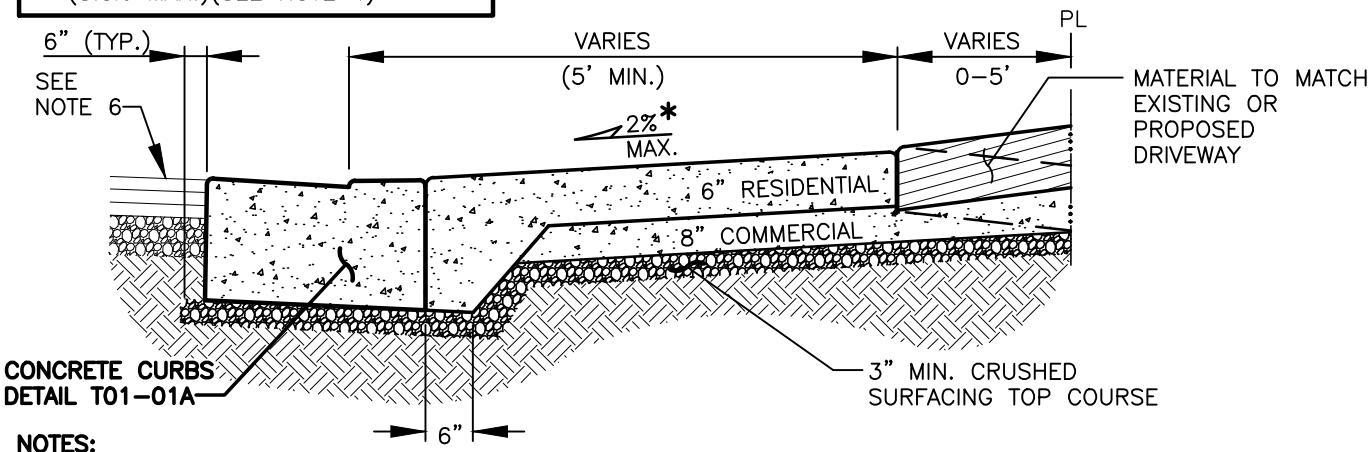

SECTION A–A

NOTES:

1. CONCRETE SHALL BE 4000 PSI MIN. (CL 4000), 3–1/2" SLUMP (MAX.), MEDIUM BROOM FINISH PARALLEL TO DRIVEWAY CENTERLINE.
2. COMMERCIAL DRIVEWAYS REQUIRE REINFORCING STEEL (6x6 – W2.9xW2.9 WWF, MIN.), MIN. 1 1/2" COVER FROM BOTTOM OF SLAB.
3. COMPACT SUBGRADE AND CRUSHED SURFACING TOP COURSE TO 95% OF MAXIMUM DRY DENSITY (3" MIN. DEPTH).
4. DRIVEWAYS EXCEEDING 15' IN TOTAL WIDTH SHALL HAVE ADDITIONAL LONGITUDINAL JOINTS AS DIRECTED. JOINT SPACING SHALL NOT EXCEED 15'. SEE **CONCRETE JOINTS DETAIL T05–02**.
5. EXISTING CURB SHALL BE REMOVED TO EXISTING JOINT OR SAWCUT SUCH THAT 3' MIN. OF NEW CURB IS CONSTRUCTED ADJACENT TO NEW DRIVEWAY.
6. SEE **PAVEMENT RESTORATION/WIDENING AT CURBS DETAIL T05–01A** WHEN CUTTING EXISTING CURB.
7. ALL EXISTING EDGES SHALL BE SAWCUT.
8. SET ALL POLES AND SIGNS BEHIND SIDEWALK.
9. IF A FIRE HYDRANT OR WATER METER BOX IS SITE NEARBY, THERE SHALL BE A MIN. OF 5' BETWEEN THE EDGE OF CONCRETE (WING) AND THE FIRE HYDRANT ASSEMBLY OR METER BOX.
10. FOR RESIDENTIAL SUBDIVISIONS ONLY, THE CONTRACTOR MUST INSTALL ALL CURBS THROUGHOUT THE PROJECT AND DEFER THE CONSTRUCTION OF DRIVEWAY DROPS. DRIVEWAY DROPS WOULD THEN BE HORIZONTALLY SAWCUT INTO THE CURB FACE AT TIME OF HOUSE CONSTRUCTION.

REV NO.	DATE	BY	APPR
1	1/15	RAW	MHA
2	3/17	RAW	MHA
3	4/18	RAW	MHA
4	7/19	RAW	MHA
5	2/21	OIS	MHA
6	9/21	RAW	MHA

PUBLIC WORKS – STREETS AND TRANSPORTATION

APPROVED BY: M H Abdalla
ENGINEER MANAGER

APPROVED DATE: 9/1/2021

CITY OF Vancouver WASHINGTON

DRIVEWAY WITH ATTACHED SIDEWALK OPTION B

STANDARD PLAN NUMBER

T01–05B

I:\CITYAPPS\AUTOCAD\STD_DETAILS\DRAWING_FILES\T01–05B

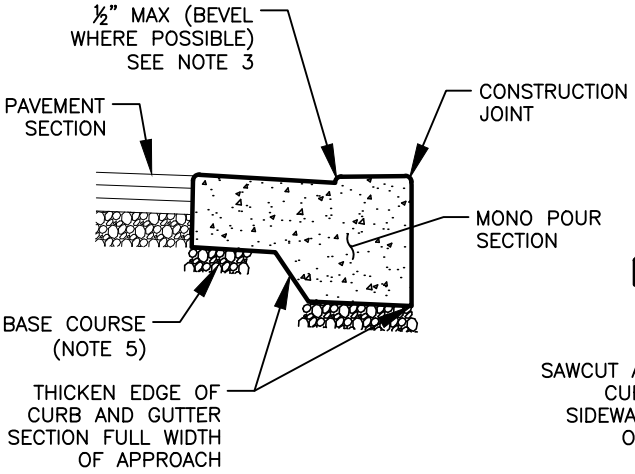

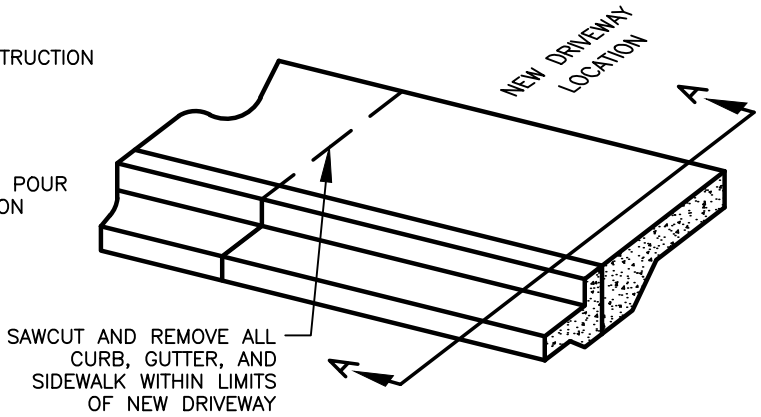

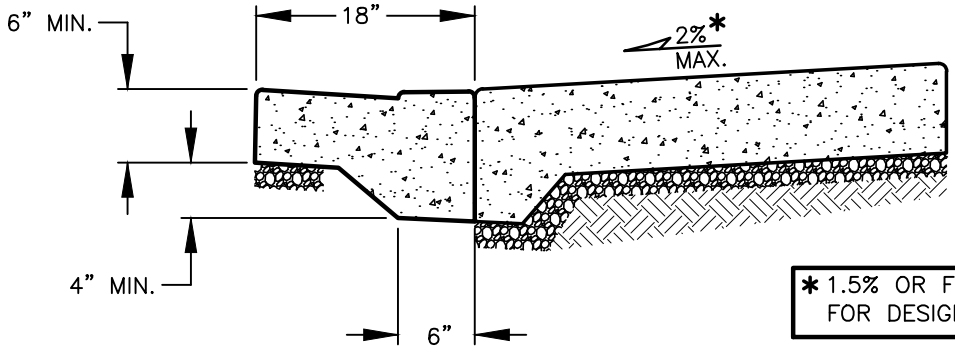

* 1.5% OR FLATTER RECOMMENDED FOR DESIGN/FORMWORK (2% MAX.)

SECTION A–A

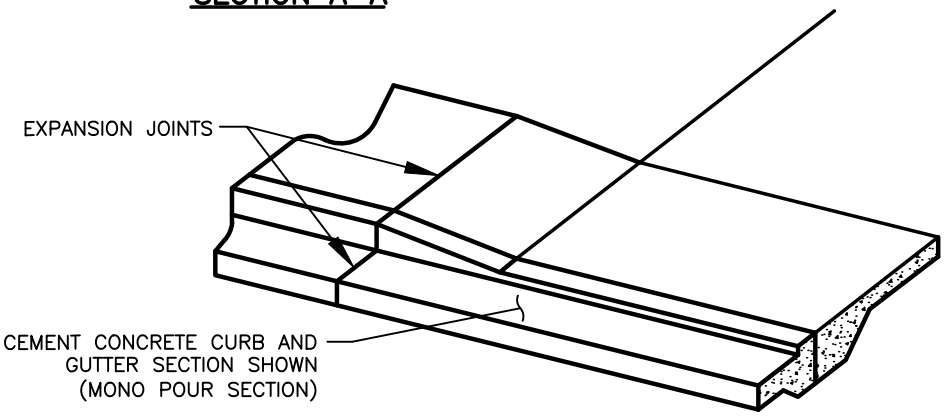

HALF ISOMETRIC

NOTES:

1. CONCRETE SHALL BE CLASS 4000 MIN.
2. CURB TO BE BRUSHED FINISHED. ALL EXISTING EDGES SHALL BE SAWCUT.
3. 1/2" VERTICAL LIP ACROSS APPROACH.
4. SUBGRADE SHALL BE COMPACTED TO 95% MAX DRY DENSITY.
5. MIN. 3" DEPTH CSBC, COMPACTED TO 95% OF MAX DRY DENSITY.
6. SEE **STANDARD DETAIL T05–02** FOR CONCRETE JOINTS.

REV NO.	DATE	BY	APPR
1	2/21	OIS	MHA
2	9/21	RAW	MHA

PUBLIC WORKS – STREETS AND TRANSPORTATION

APPROVED BY: M H Abdalla
ENGINEER MANAGER
APPROVED DATE: 9/1/2021

CITY OF Vancouver WASHINGTON

CONCRETE DRIVEWAY CUT DETAIL

STANDARD PLAN NUMBER
T01–06

I:\CITYAPPS\AUTOCAD\STD_DETAILS\DRAWING_FILES\T01–06

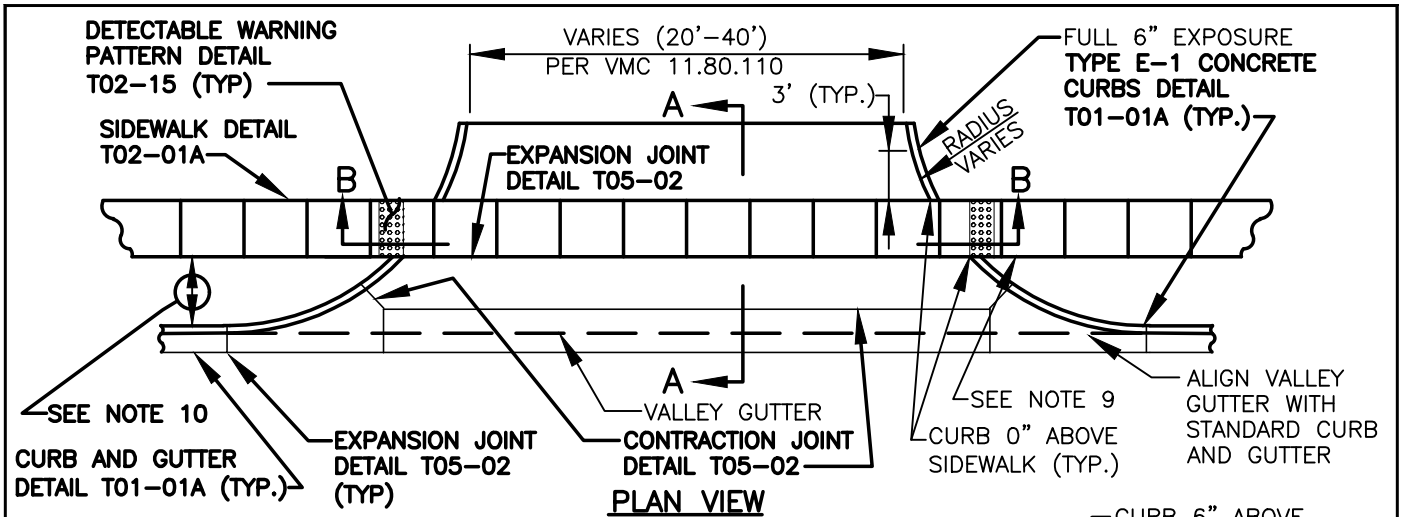

PLAN VIEW

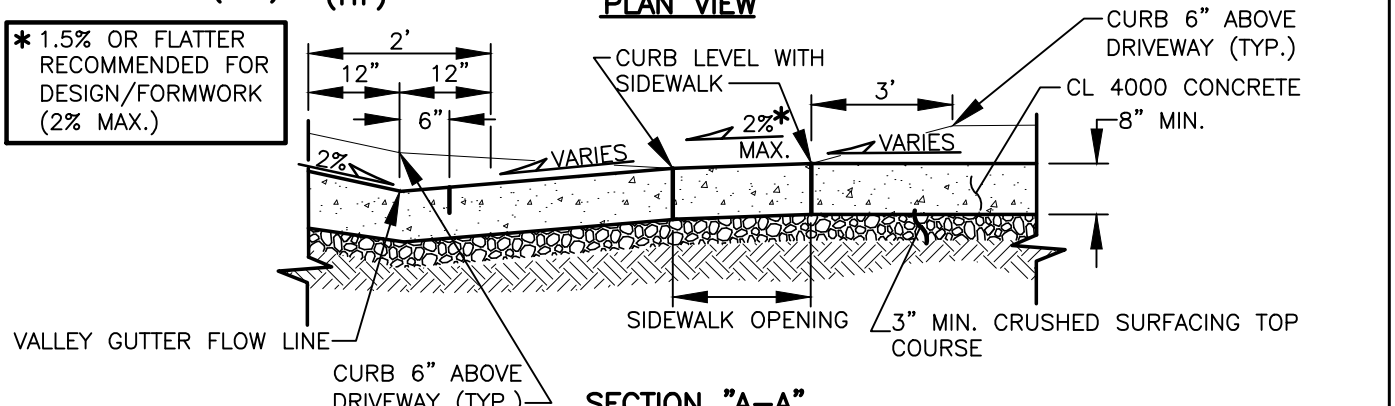

SECTION "A-A"

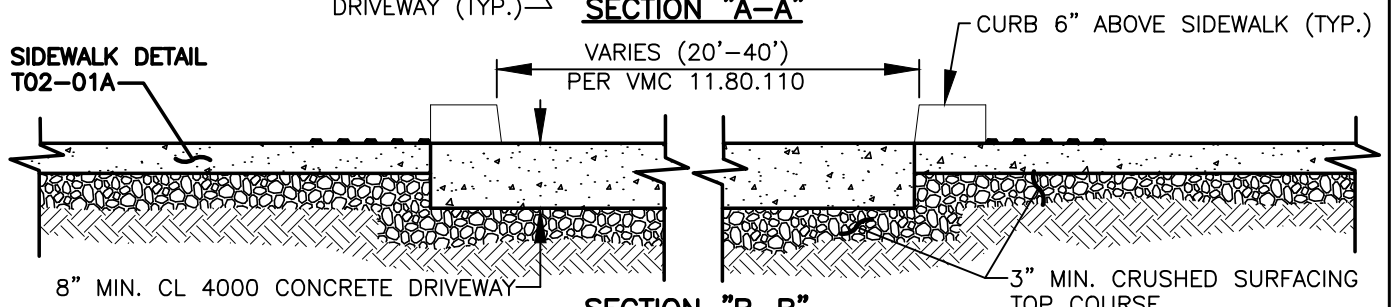

SECTION "B-B"

NOTES:

1. CONCRETE SHALL BE 4000 PSI MIN., (CL 4000) 3-1/2" SLUMP (MAX.), MEDIUM BROOM FINISH PARALLEL TO DRIVEWAY CENTERLINE.
2. DRIVEWAY SHALL BE CONSTRUCTED WITH REINFORCING STEEL (6x6 – W2.9xW2.9 WWF, MIN.), MIN. 1½" COVER FROM BOTTOM OF SLAB.
3. COMPACT SUBGRADE AND CRUSHED SURFACING TOP COURSE TO 95% OF MAXIMUM DRY DENSITY (3" MIN. DEPTH).
4. DRIVEWAYS EXCEEDING 15' IN TOTAL WIDTH SHALL HAVE ADDITIONAL LONGITUDINAL JOINTS AS DIRECTED. CONTROL JOINT SPACING SHALL NOT EXCEED 15'. SEE **CONCRETE JOINTS DETAIL T05-02**.
5. SEE **PAVEMENT RESTORATION/WIDENING AT CURB DETAIL T05-01A** WHEN CUTTING EXISTING CURB. EXISTING CURB SHALL BE REMOVED TO EXISTING JOINT OR SAWCUT SUCH THAT 3' MIN. OF NEW CURB IS CONSTRUCTED ADJACENT TO NEW DRIVEWAY.
7. MAXIMUM 2% CROSS SLOPE ACROSS PEDESTRIAN CROSSING.
8. TRANSITION CURB FROM FULL 6" EXPOSURE TO 0" OVER THE FIRST 6' FROM CORNER.
9. MAINTAIN ADJACENT SIDEWALK GRADES THROUGH DRIVEWAY (NO RAMPS) UNLESS OTHERWISE APPROVED.
10. SEE **T10-XX SERIES STANDARD PLANS** FOR PLANTER STRIP WIDTH.
11. CURB RETURN ELEVATIONS SHALL BE SHOWN ON PLANS TO DETERMINE SIDEWALK GRADE.
12. IF A FIRE HYDRANT OR WATER METER BOX IS SITE NEARBY, THERE SHALL BE A MIN. OF 5' BETWEEN THE EDGE OF CONCRETE (WING) AND THE FIRE HYDRANT ASSEMBLY OR METER BOX.

REV NO.	DATE	BY	APPR
1	8/08	RAW	MHA
2	7/14	RAW	MHA
3	1/15	RAW	MHA
4	3/17	RAW	MHA
5	4/18	RAW	MHA
6	9/21	RAW	MHA

PUBLIC WORKS – STREETS AND TRANSPORTATION

APPROVED BY: M H Abdalla
ENGINEER MANAGER
APPROVED DATE: 9/1/2021

CITY OF Vancouver WASHINGTON

MAJOR COMMERCIAL DRIVEWAY

STANDARD PLAN NUMBER T01-07

I:\CITYAPPS\AUTOCAD\STD_DETAILS\DRAWING_FILES\T01-07

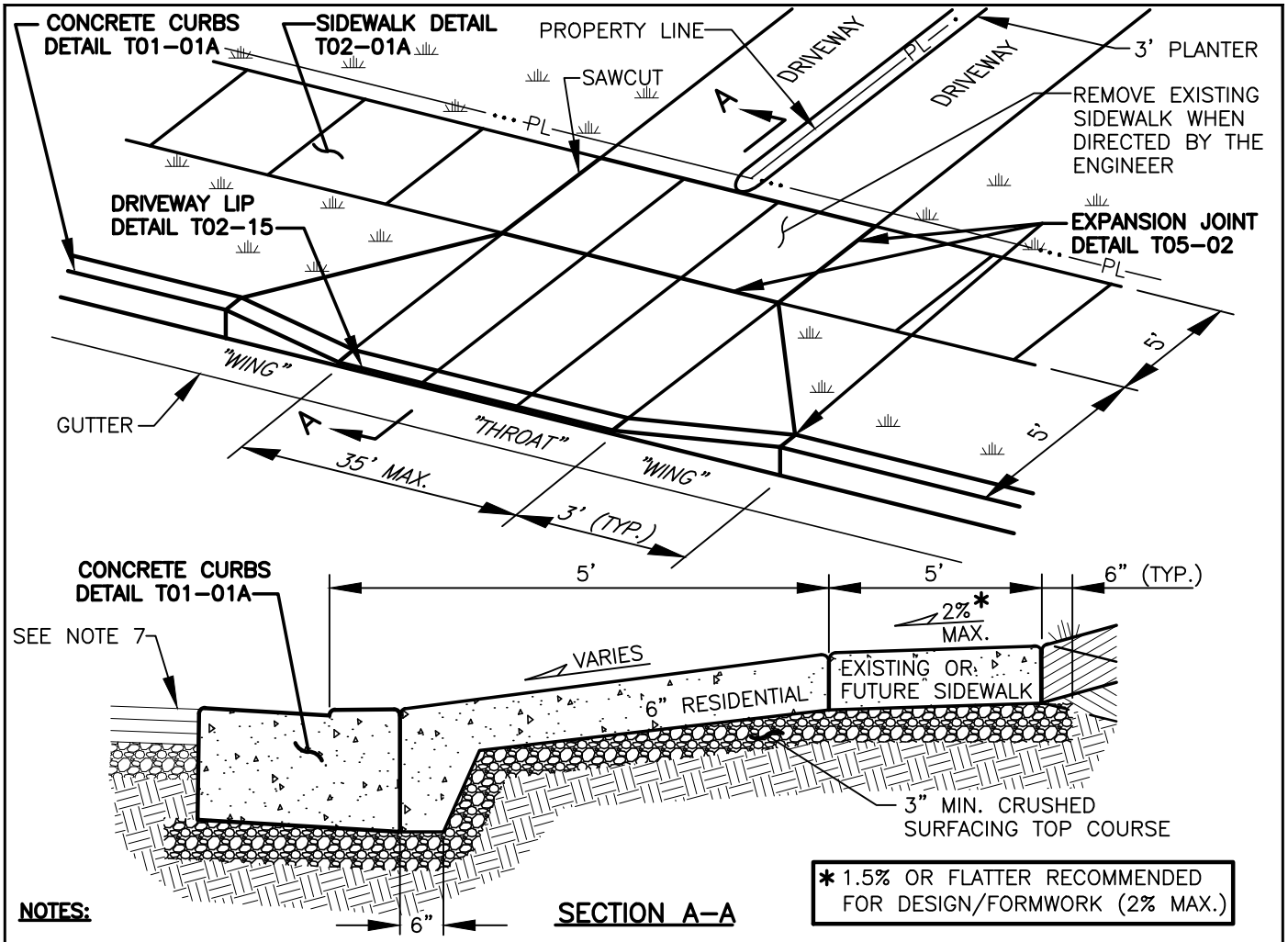

NOTES:

1. CONCRETE SHALL BE 4000 PSI MIN. (CL 4000), 3–1/2" SLUMP (MAX.), MEDIUM BROOM FINISH PARALLEL TO DRIVEWAY CENTERLINE.
2. TO BE USED WHERE CURB AND SIDEWALK ARE SEPARATED BY A PLANTER STRIP.
3. COMPACT SUBGRADE AND CRUSHED SURFACING TOP COURSE TO 95% OF MAXIMUM DRY DENSITY (3" MIN. DEPTH).
4. DRIVEWAYS EXCEEDING 15' IN TOTAL WIDTH SHALL HAVE ADDITIONAL LONGITUDINAL JOINTS AS DIRECTED. JOINT SPACING SHALL NOT EXCEED 15'. SEE **CONCRETE JOINTS DETAIL T05–02**.
5. EXISTING CURB SHALL BE REMOVED TO EXISTING JOINT OR SAWCUT SUCH THAT 3' MIN. OF NEW CURB IS CONSTRUCTED ADJACENT TO NEW DRIVEWAY.
6. SEE **PAVEMENT RESTORATION/WIDENING AT CURB DETAIL T05–01A** WHEN CUTTING EXISTING CURB.
7. ALL EXISTING EDGES SHALL BE SAWCUT.
8. STRUCTURAL SECTION OF DRIVEWAY TO BE EXTENDED THROUGH SIDEWALK AREA.
9. WHERE DRIVEWAY IS OFF OF ROADWAY, SIDEWALK IS NEEDED, IF DRIVEWAY IS OFF OF ALLEY, NO SIDEWALK IS REQUIRED.
10. SEE **NARROW LOT STREET PLAN AND SECTION DETAILS T10–24A** AND **T10–24B** AND **NARROW LOT ALLEY PLAN AND SECTION DETAILS T10–25A** AND **T10–25B** FOR ADDITIONAL INFORMATION.
11. OPTIONAL DRIVEWAY WINGS ARE AVAILABLE THROUGH THE "ADMINISTRATIVE ROAD MODIFICATION" PROCESS.
12. IF A FIRE HYDRANT OR WATER METER BOX IS SITE NEARBY, THERE SHALL BE A MIN. OF 5' BETWEEN THE EDGE OF CONCRETE (WING) AND THE FIRE HYDRANT ASSEMBLY OR METER BOX.
13. FOR RESIDENTIAL SUBDIVISIONS ONLY, THE CONTRACTOR MUST INSTALL ALL CURBS THROUGHOUT THE PROJECT AND DEFER THE CONSTRUCTION OF DRIVEWAY DROPS. DRIVEWAY DROPS WOULD THEN BE HORIZONTALLY SAWCUT INTO THE CURB FACE AT TIME OF HOUSE CONSTRUCTION.

REV NO.	DATE	BY	APPR
1	1/15	RAW	MHA
2	3/17	RAW	MHA
3	4/18	RAW	MHA
4	7/19	RAW	MHA
5	2/21	OIS	MHA
6	9/21	RAW	MHA

PUBLIC WORKS – STREETS AND TRANSPORTATION

APPROVED BY: M H Abdalla
ENGINEER MANAGER

APPROVED DATE: 9/1/2021

CITY OF Vancouver WASHINGTON

SHARED DRIVEWAY WITH DETACHED SIDEWALK

STANDARD PLAN NUMBER

T01–08

I:\CITYAPPS\AUTOCAD\STD_DETAILS\DRAWING_FILES\T01–08

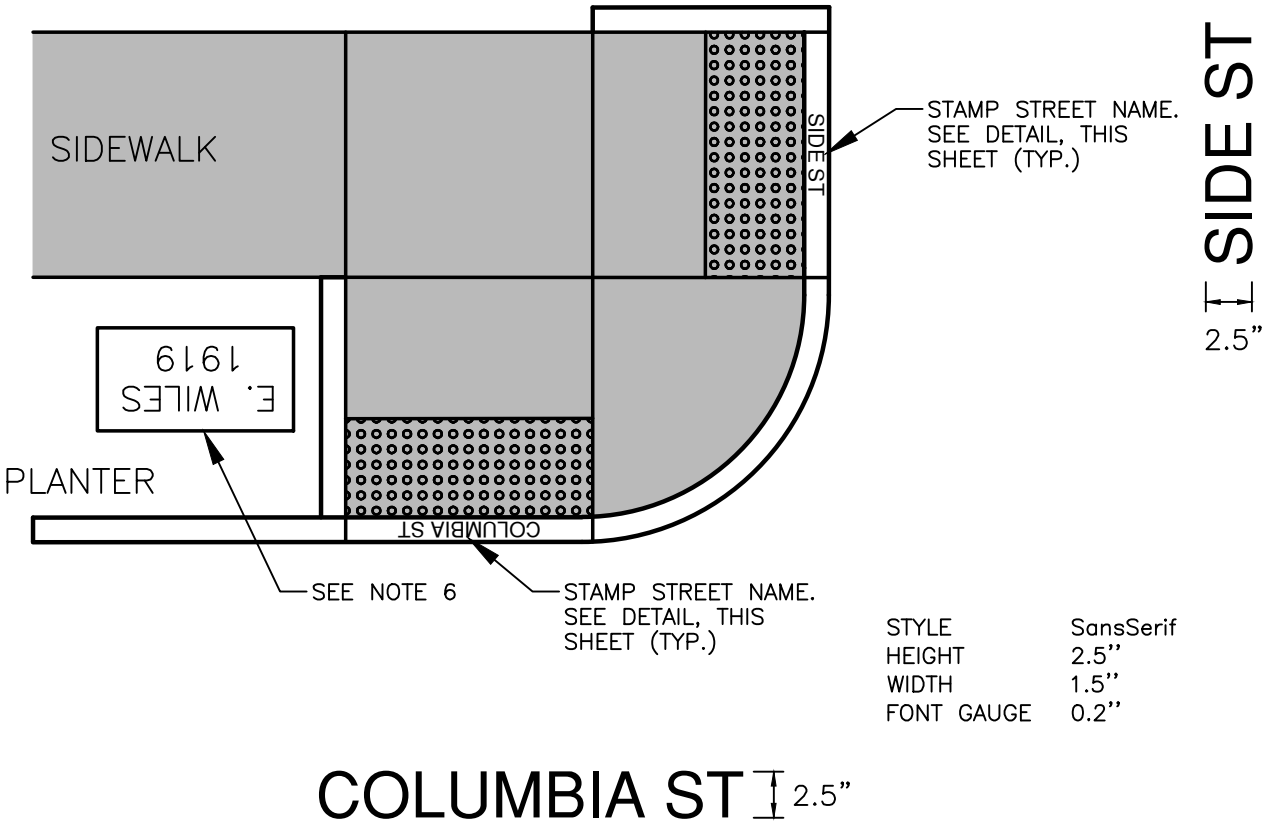

STYLE	SansSerif
HEIGHT	2.5"
WIDTH	1.5"
FONT GAUGE	0.2"

NOTES:

1. STREET NAME SHALL BE STAMPED ON PROPOSED CURB AND BE CENTERED WITHIN THE 5' WIDE PEDESTRIAN RAMP
2. TEXT STYLE SHALL BE SansSerif OR APPROVED EQUAL.
3. CONTRACTOR SHALL SUBMIT STAMP SAMPLE FOR CITY APPROVAL PRIOR TO STAMPING.
4. FAILURE TO STAMP STREET NAMES WILL REQUIRE CURB REPLACEMENT AT THE CONTRACTORS EXPENSE.
5. STAMP SHALL BE PLACED WITHIN 30 MINUTES OF CONCRETE POUR AND SHALL BE CLEARLY VISIBLE AFTER CURING.
6. CONTRACTOR SHALL PLACE EXISTING CONTRACTOR AND DATE STAMPED CONCRETE IN PLANTER STRIP AT GRADE. ONE PER NAME PER INTERSECTION

REV NO.	DATE	BY	APPR
1	7/14	RAW	MHA
2	9/21	RAW	MHA

PUBLIC WORKS – STREETS AND TRANSPORTATION

APPROVED BY: M H Abdalla
ENGINEER MANAGER
APPROVED DATE: 9/1/2021

CITY OF Vancouver WASHINGTON

CURB STAMP DETAIL

STANDARD PLAN NUMBER
T01–09

I:\CITYAPPS\AUTOCAD\STD_DETAILS\DRAWING_FILES\T01-09

NOMINAL JOINT SPACING:

1. SURFACE JOINT AT 5'.
2. CONTRACTION JOINT AT 15'.
3. EXPANSION JOINT AT STRUCTURES, OBSTRUCTION, OR AS DIRECTED BY THE INSPECTOR.

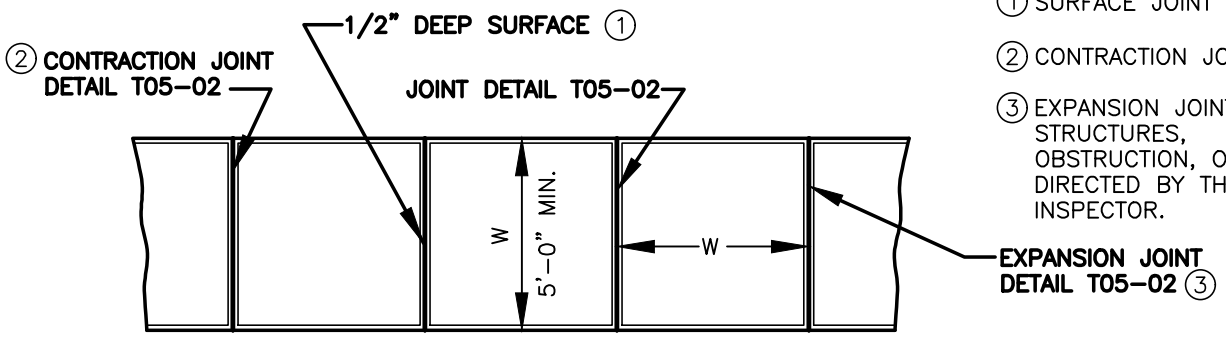

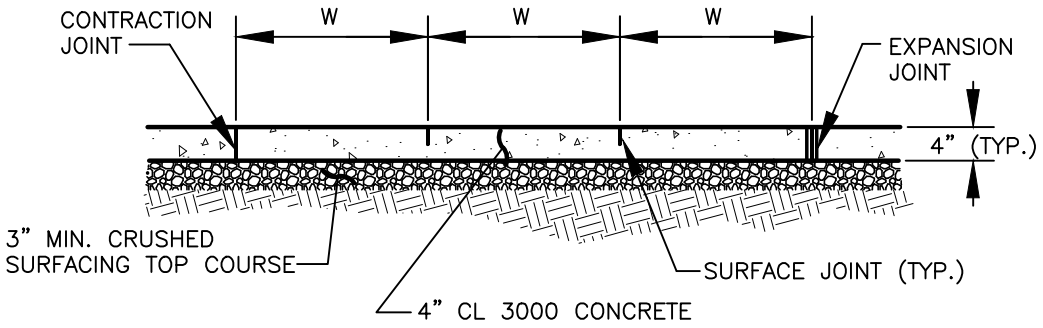

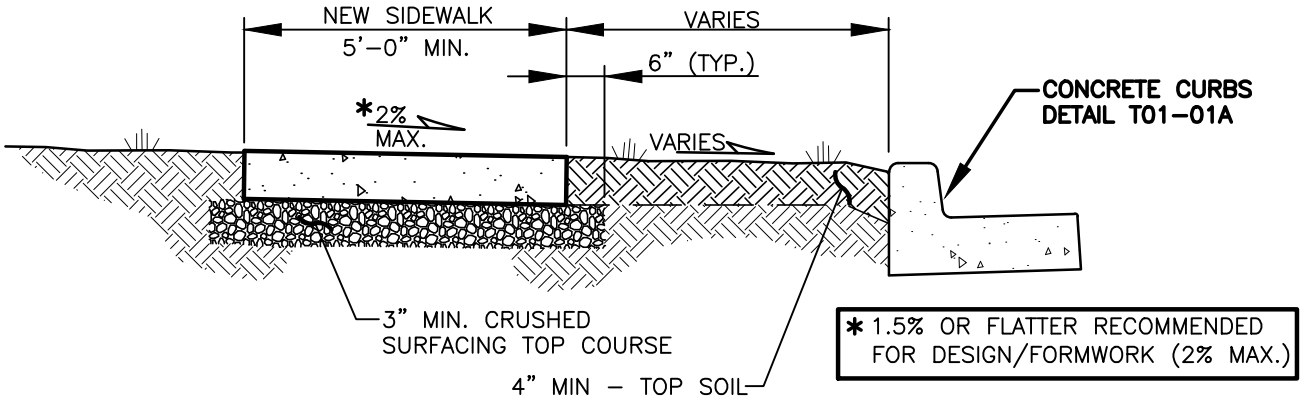

NOTES:

1. CONCRETE SHALL BE 3000 PSI MIN. (CL 3000), 3 1/2" SLUMP (MAX.).
2. COMPACT SUBGRADE AND CRUSHED SURFACING TOP COURSE TO 95% OF MAXIMUM DRY DENSITY (3" MIN. DEPTH).
3. FINISH SHALL BE MEDIUM BROOM PERPENDICULAR TO PEDESTRIAN TRAFFIC UNLESS OTHERWISE DIRECTED.
4. 2" SMOOTH FINISH BORDER AROUND EACH SIDEWALK PANEL OR MATCH EXISTING BORDER.
5. SEE **CONCRETE JOINTS DETAIL T05-02** FOR SURFACE, CONTRACTION, AND EXPANSION JOINTS.
6. ALL EXISTING EDGES SHALL BE SAWCUT.
7. CROSS SLOPE OF PLANTER STRIP SHALL BE 2% (TYP.) AND 4:1 (MAX.).
8. ALL SIDEWALK REMOVAL AND REPLACEMENT SHALL BE JOINT TO JOINT.
9. SIDEWALK REPLACEMENT AREAS SHALL BE ROCKED LEVEL AND COMPACTED UNTIL CONCRETE IS PLACED.
10. FIRE HYDRANT OR WATER METER BOX SHALL NOT BE WITHIN THE SIDEWALK.

REV NO.	DATE	BY	APPR
1	7/14	RAW	MHA
2	1/15	RAW	MHA
3	3/17	RAW	MHA
4	4/18	RAW	MHA
5	2/21	OIS	MHA
6	9/21	RAW	MHA

PUBLIC WORKS – STREETS AND TRANSPORTATION

APPROVED BY: M H Abdalla
ENGINEER MANAGER

APPROVED DATE: 9/1/2021

CITY OF Vancouver WASHINGTON

SIDEWALK DETAIL

STANDARD PLAN NUMBER

T02-01A

I:\CITYAPPS\AUTOCAD\STD_DETAILS\DRAWING_FILES\T02-01A

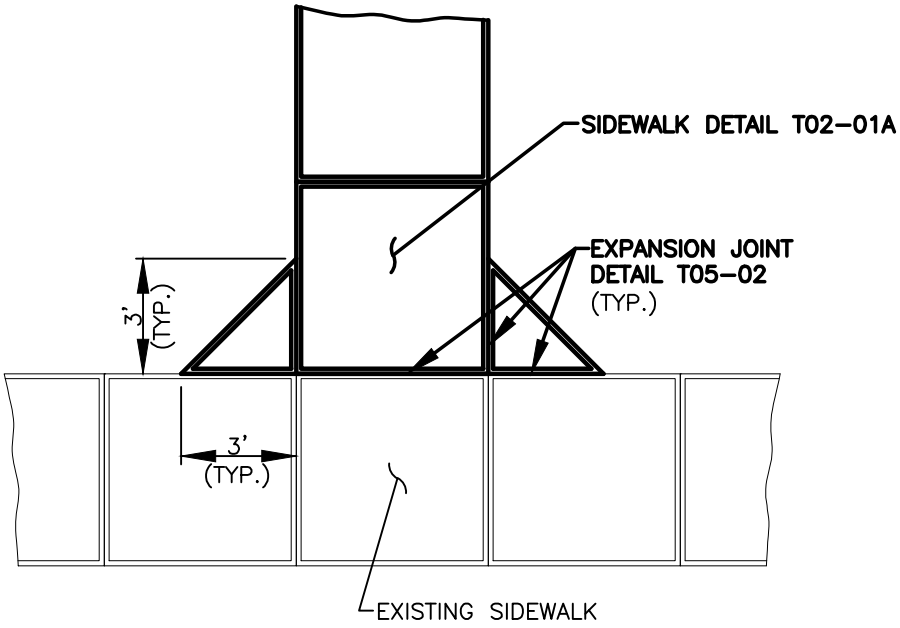

OPTION A

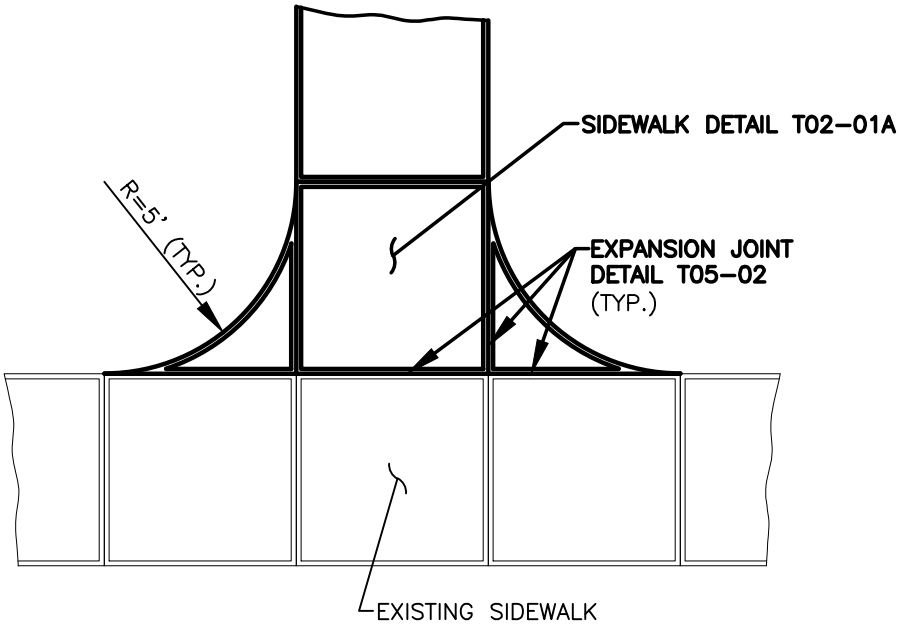

OPTION B

NOTES:

1. CONCRETE SHALL BE 3000 PSI MIN. (CL 3000), 3 1/2" SLUMP (MAX.).
2. COMPACT SUBGRADE AND CRUSHED SURFACING TOP COURSE TO 95% OF MAXIMUM DRY DENSITY (3" MIN. DEPTH).
3. FINISH SHALL BE MEDIUM BROOM PERPENDICULAR TO PEDESTRIAN TRAFFIC UNLESS OTHERWISE DIRECTED.
4. 2" SMOOTH FINISH BORDER AROUND EACH SIDEWALK PANEL OR MATCH EXISTING BORDER.
5. SEE **CONCRETE JOINTS DETAIL T05–02** FOR SURFACE, CONTRACTION, AND EXPANSION JOINTS.

REV NO.	DATE	BY	APPR
1	3/06	RAW	MHA
2	2/07	RAW	MHA
3	8/08	RAW	MHA
4	7/14	RAW	MHA
5	4/18	RAW	MHA
6	9/21	RAW	MHA

PUBLIC WORKS – STREETS AND TRANSPORTATION

APPROVED BY: M H Abdalla
ENGINEER MANAGER

APPROVED DATE: 9/1/2021

CITY OF Vancouver WASHINGTON

INTERSECTING SIDEWALK DETAIL

STANDARD PLAN NUMBER

T02–01B

I:\CITYAPPS\AUTOCAD\STD_DETAILS\DRAWING_FILES\T02–01B

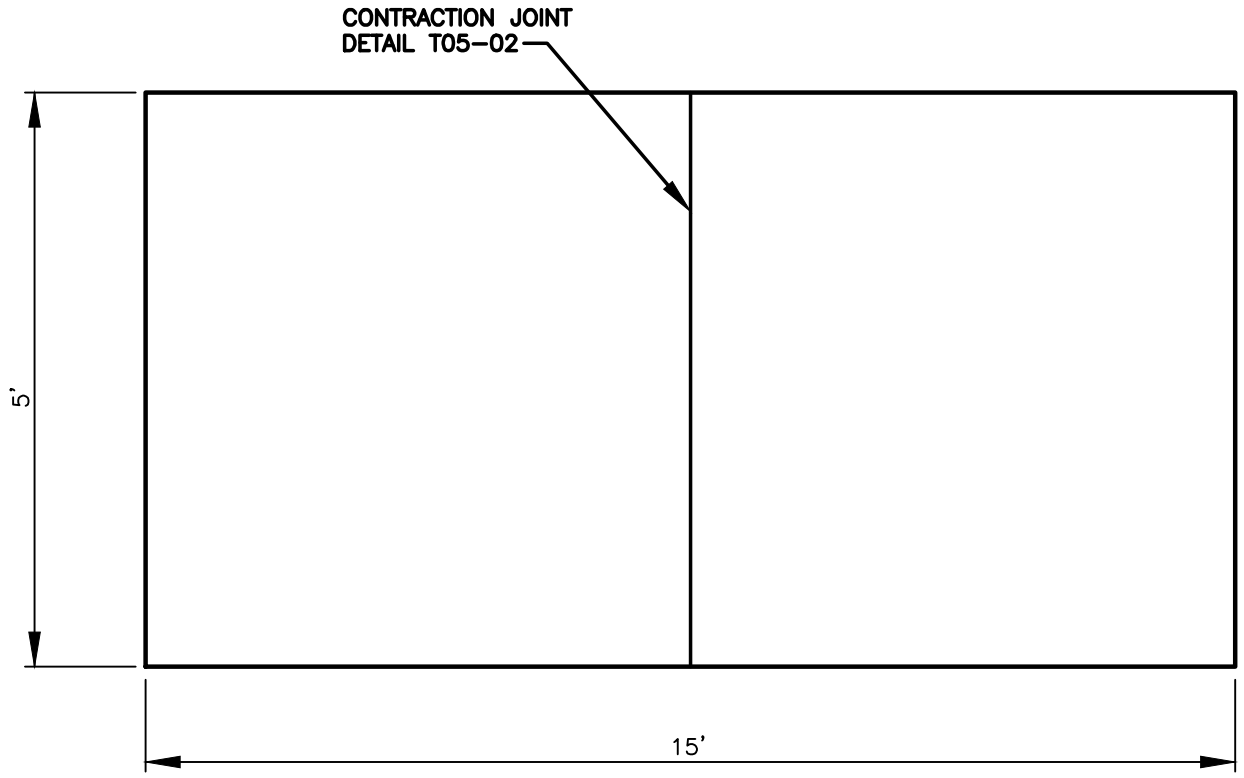

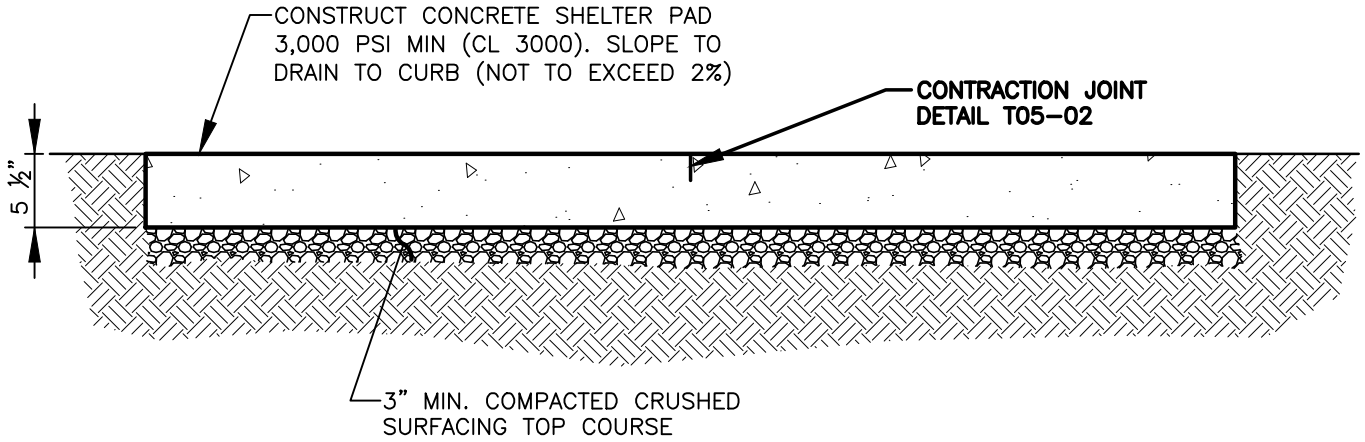

NOTES:

1. CONCRETE SHALL BE 3000 PSI MIN. (CL 3000), 3 1/2" SLUMP (MAX.).
2. COMPACT SUBGRADE AND CRUSHED SURFACING TOP COURSE TO 95% OF MAXIMUM DRY DENSITY (3" MIN. DEPTH).
3. FINISH SHALL BE MEDIUM BROOM PERPENDICULAR TO PEDESTRIAN TRAFFIC UNLESS OTHERWISE DIRECTED.
4. 2" SMOOTH FINISH BORDER AROUND EACH SIDEWALK PANEL OR MATCH EXISTING BORDER.
5. SEE **CONCRETE JOINTS DETAIL T05–02** FOR CONTRACTION EXPANSION JOINTS.
6. ALL EXISTING EDGES SHALL BE SAWCUT.
7. SIDEWALK CLEARANCE ZONE IS 4' MIN.
8. CHECK WITH C–TRAN FOR ADDITIONAL INFORMATION IN REGARDS TO SHELTER STYLE AND INSTALLATION.
9. BUS SHELTER CONCRETE PAD SHALL BE EITHER BEHIND SIDEWALK OR 2' FROM FACE OF CURB.

REV NO.	DATE	BY	APPR
1	2/07	RAW	MHA
2	8/08	RAW	MHA
3	7/14	RAW	MHA
4	4/18	RAW	MHA
5	9/21	RAW	MHA

PUBLIC WORKS – STREETS AND TRANSPORTATION

APPROVED BY: M H Abdalla
ENGINEER MANAGER

APPROVED DATE: 9/1/2021

CITY OF Vancouver WASHINGTON

BUS STOP
SHELTER CONCRETE PAD

STANDARD PLAN NUMBER
T02–01C

I:\CITYAPPS\AUTOCAD\STD_DETAILS\DRAWING_FILES\T02–01C

1) RAISED SIDEWALK
(REPLACE PANELS)

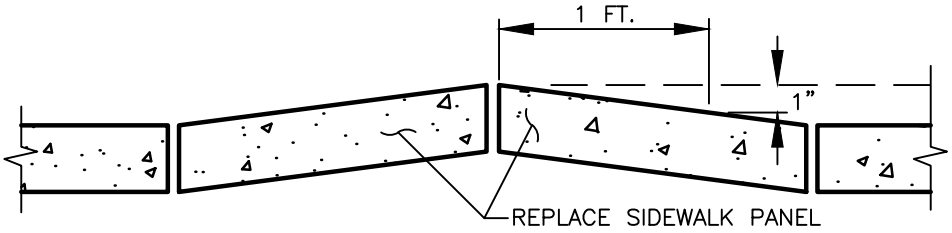

2) SUNKEN SIDEWALK
(REPLACE PANELS)

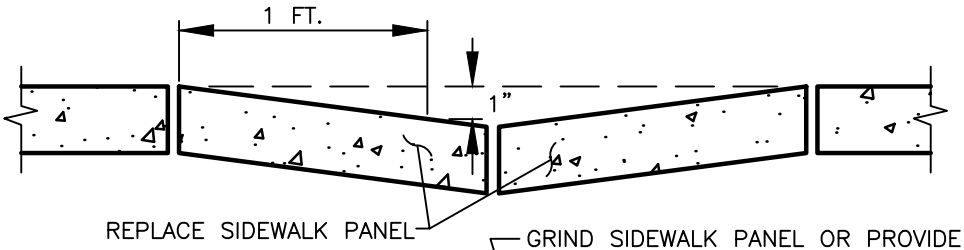

3) STEP SEPARATIONS
(REPLACE PANEL OR PROVIDE BEVELED EDGE AT 1:2 SLOPE)

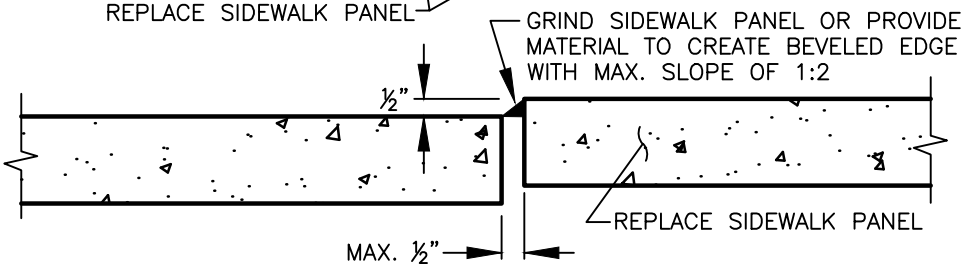

4) OPENING IN SIDEWALK
(REPLACE PANEL)

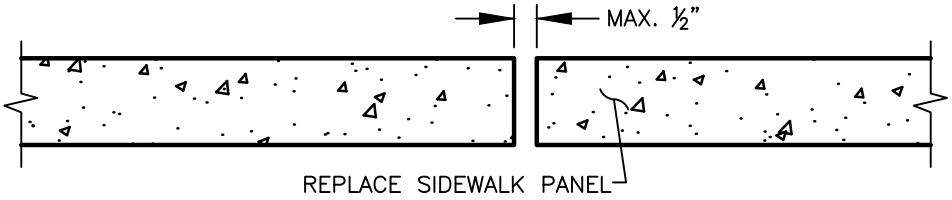

5) SPALLING OF SIDEWALK
(REPLACE DAMAGED PANEL)

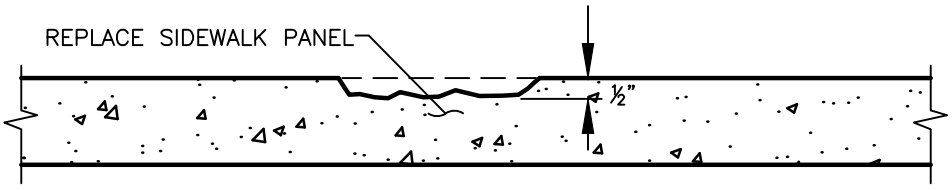

6) METER BOXES
(REPLACE PANEL, PROVIDE BEVELED EDGE AT 1:2 SLOPE OR ADJUST METER BOXES TO MEET SIDEWALK EDGE)

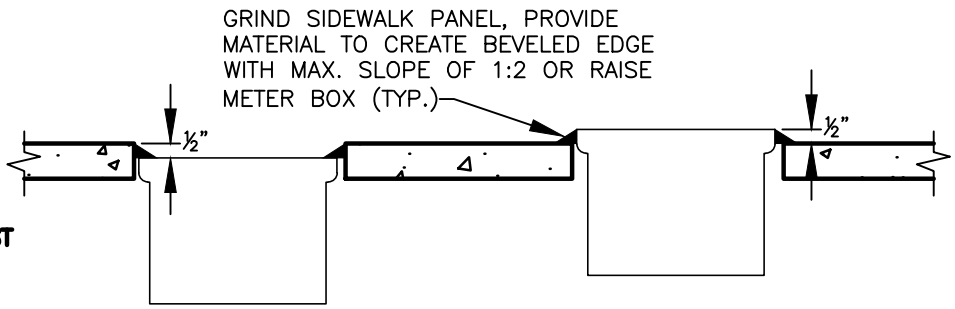

7) BROKEN CURB

8) OTHER HAZARD

NOTE:

1. PAVERS SHALL FOLLOW THE SAME CRITERIA AS CONCRETE SIDEWALKS.
2. REPAIR OPTIONS ARE IN PARENTHESIS **(XXX)**.

REV NO.	DATE	BY	APPR
1	2/07	RAW	MHA
2	8/08	RAW	MHA
3	7/14	RAW	MHA
4	9/21	RAW	MHA

PUBLIC WORKS – STREETS AND TRANSPORTATION

APPROVED BY: M H Abdalla
ENGINEER MANAGER

APPROVED DATE: 9/1/2021

CITY OF Vancouver WASHINGTON

SIDEWALK REPLACEMENT
MIN. CRITERIA TO ENSURE ADA COMPLIANCE AND REPAIR OPTIONS

STANDARD PLAN NUMBER
T02–01D

I:\CITYAPPS\AUTOCAD\STD_DETAILS\DRAWING_FILES\T02–01D

NOMINAL JOINT SPACING
SEE DETAIL T05–02

1. SURFACE JOINT AT 6'.
2. CONTRACTION JOINT AT 18'.
3. EXPANSION JOINT AT, STRUCTURES, OBSTRUCTIONS, OR AS DIRECTED BY THE INSPECTOR.

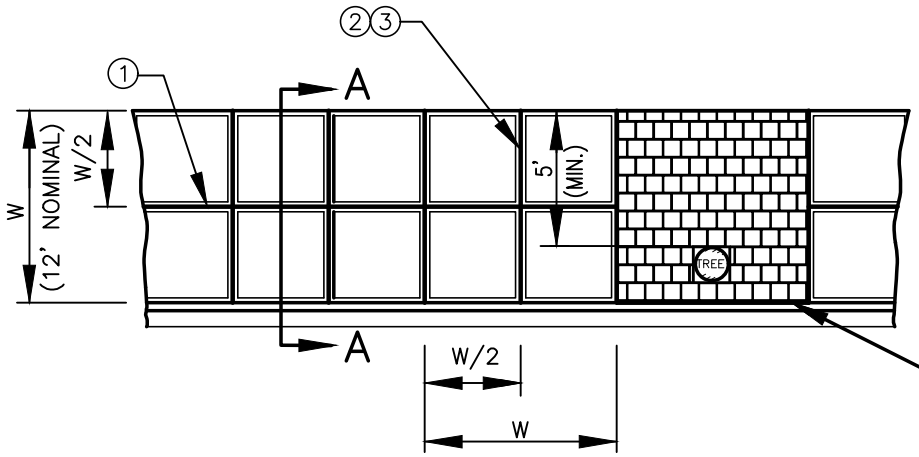

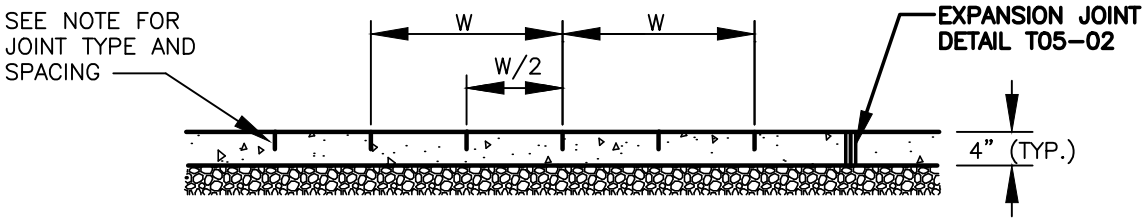

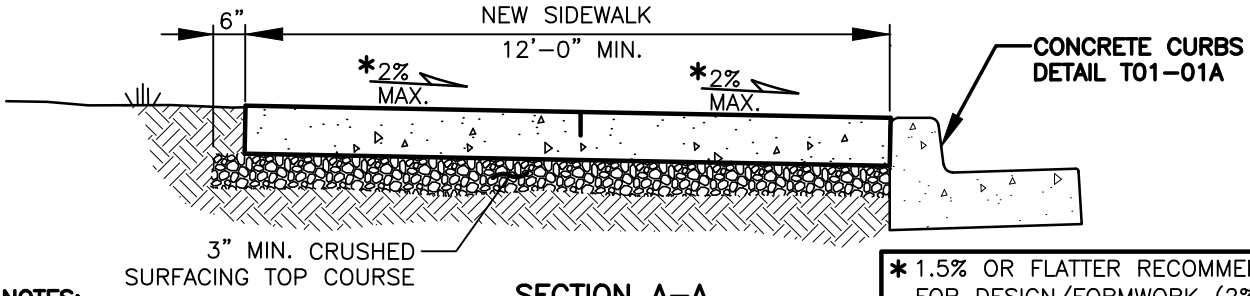

SECTION A–A

* 1.5% OR FLATTER RECOMMENDED FOR DESIGN/FORMWORK (2% MAX.)

NOTES:

1. CONCRETE SHALL BE 3000 PSI MIN. (CL 3000), 3 1/2" SLUMP (MAX.).
2. COMPACT SUBGRADE AND CRUSHED SURFACING TOP COURSE TO 95% OF MAXIMUM DRY DENSITY (3" MIN. DEPTH).
3. FINISH SHALL BE MEDIUM BROOM PERPENDICULAR TO PEDESTRIAN TRAFFIC UNLESS OTHERWISE DIRECTED.
4. SIDEWALK PANEL TO MATCH EXISTING BORDER AND SCORING OR 2" SMOOTH FINISH BORDER AROUND EACH SIDE.
5. SEE **CONCRETE JOINTS DETAIL T05–02**.
6. BRICK BANDING SET IN MORTAR ON TOP OF A CONCRETE FOUNDATION TO MATCH EXISTING SIDEWALK OR APPROVED BY CITY PLANNER.
7. UTILITY RISERS SHALL BE KEPT ADJACENT TO THE CURB TO CREATE A STRAIGHT PATH FREE OF OBSTRUCTIONS FOR PEDESTRIAN TRAVEL.
8. SIDEWALK PATTERN MAY BE USED OUTSIDE OF CITY CENTER AREA WITH ENGINEER APPROVAL.
9. SEE **ROOT BARRIER DETAILS T03–22A AND T03–22B** IF A ROOT BARRIER IS NEEDED TO PROTECT THE SIDEWALK.
10. FIRE HYDRANT OR WATER METER BOX SHALL NOT BE WITHIN THE SIDEWALK.
11. WHERE THE HERITAGE SIDEWALK IS CONSTRUCTED BRICK RAMPS PER **BRICK UNIT PAVER PATTERN DETAIL T02–16** SHALL ALSO BE CONSTRUCTED WITH WHITE TRUNCATED DOMES PER **RAMP LIP, DRIVEWAY LIP AND DETECTABLE WARNING PATTERN DETAIL T02–15** SHALL BE PLACED IN ALL BRICK RAMPS.

REV NO.	DATE	BY	APPR
1	1/15	RAW	MHA
2	3/16	RAW	MHA
3	3/17	RAW	MHA
4	4/18	RAW	MHA
5	2/21	OIS	MHA
6	9/21	RAW	MHA

PUBLIC WORKS – STREETS AND TRANSPORTATION

APPROVED BY: M H Abdalla
ENGINEER MANAGER
APPROVED DATE: 9/1/2021

CITY OF Vancouver WASHINGTON

HERITAGE SIDEWALK

STANDARD PLAN NUMBER
T02–02

I:\CITYAPPS\AUTOCAD\STD_DETAILS\DRAWING_FILES\T02–02

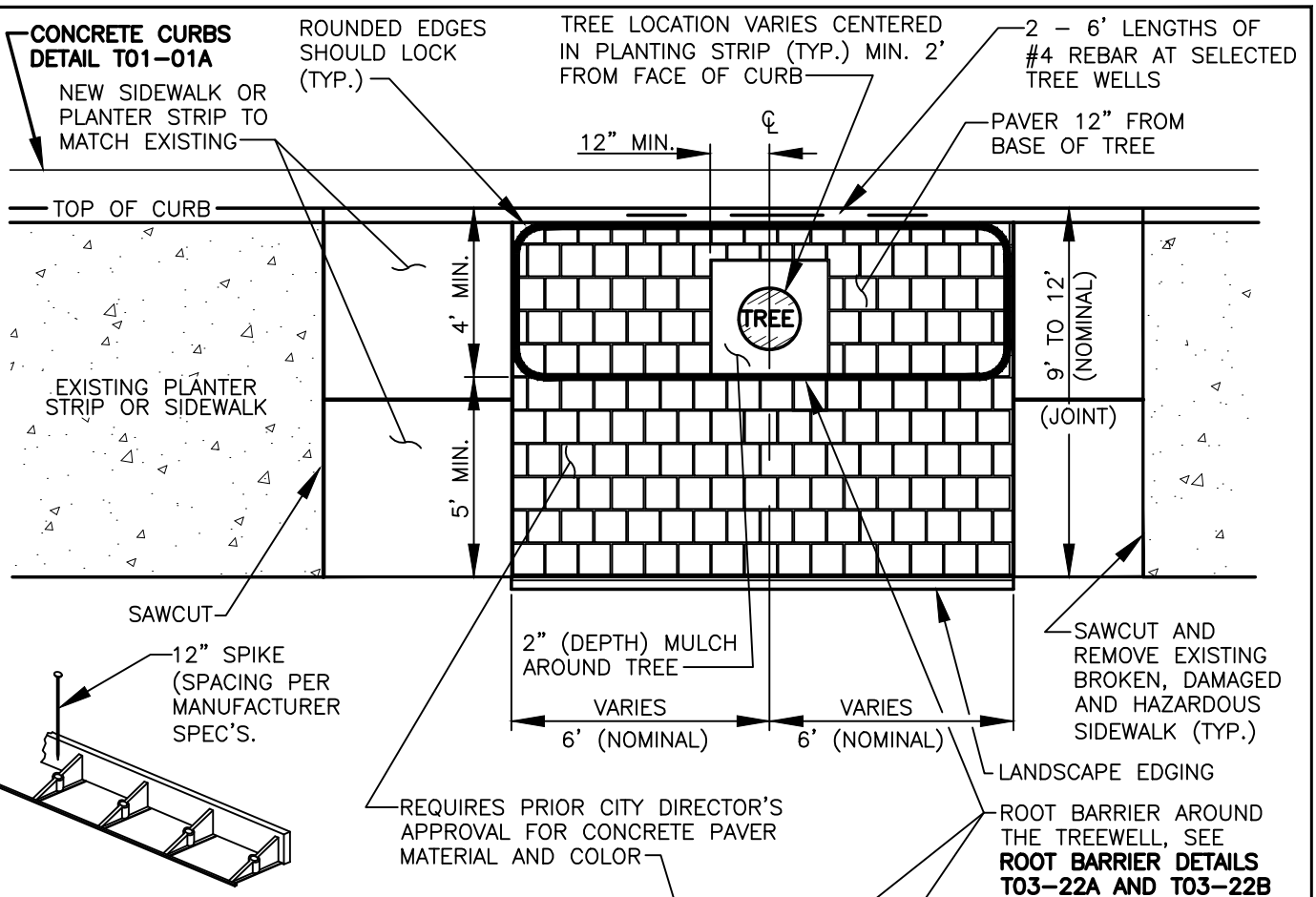

LANDSCAPE EDGING

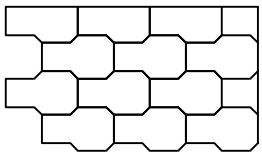

ALTERNATE CONCRETE PAVER PATTERN

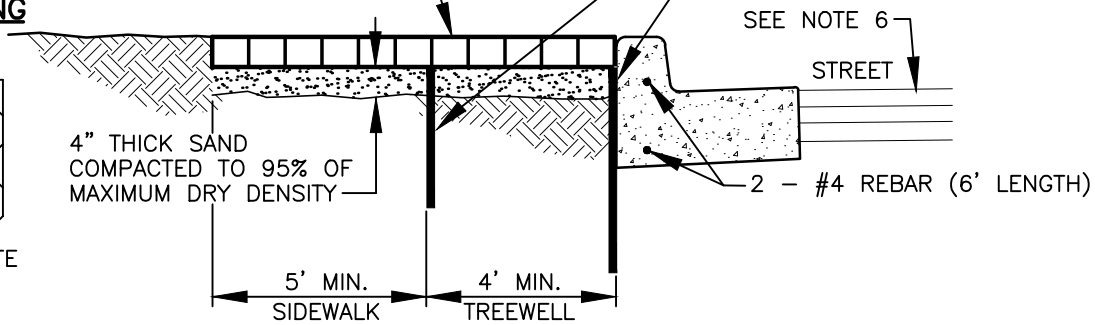

PAVER EDGE DETAIL

NOTES:

1. SAMPLE OF BRICK COLOR SHALL BE APPROVED BY THE CITY ENGINEER PRIOR TO CONSTRUCTION. BRICK MANUFACTURED BY MUTUAL MATERIALS, "BURGUNDY–MICA TILE" OR ENDICOTT "MEDIUM IRONSPOT #46" OR APPROVED EQUAL.
2. CONCRETE SHALL BE 3000 PSI MIN. (CL 3000), 3 1/2" SLUMP (MAX.), SMOOTH FINISH, AND EDGES FINISHED WITH 1/4" EDGE UNLESS OTHERWISE NOTED.
3. THE CENTER OF THE PAVER PATTERN SHALL BE THE STREET TREE.
4. EACH TREE SHALL HAVE APPROXIMATELY 144 S.F. OF PAVER AREA (72 S.F. TREEWELL AND 72 S.F. WALKWAY/SIDEWALK).
5. CONCRETE BAND MAY BE DELETED IF PAVERS ABUT A BUILDING.
6. SEE **PAVEMENT RESTORATION/WIDENING AT CURB DETAIL T05–02** WHEN CUTTING EXISTING CURB.
7. SEE **ROOT BARRIER DETAILS T03–22A AND T03–22B** IF A ROOT BARRIER IS REQUIRED BY ENGINEER TO PROTECT THE SIDEWALK.

REV NO.	DATE	BY	APPR
1	7/14	RAW	MHA
2	3/16	RAW	MHA
3	3/17	RAW	MHA
4	4/18	RAW	MHA
5	2/21	OIS	MHA
6	9/21	RAW	MHA

PUBLIC WORKS – STREETS AND TRANSPORTATION

APPROVED BY: M H Abdalla
ENGINEER MANAGER

APPROVED DATE: 9/1/2021

CITY OF Vancouver WASHINGTON

TREE WELL AND PAVER EDGE INSTALLATION

STANDARD PLAN NUMBER T02–03

I:\CITYAPPS\AUTOCAD\STD_DETAILS\DRAWING_FILES\T02–03

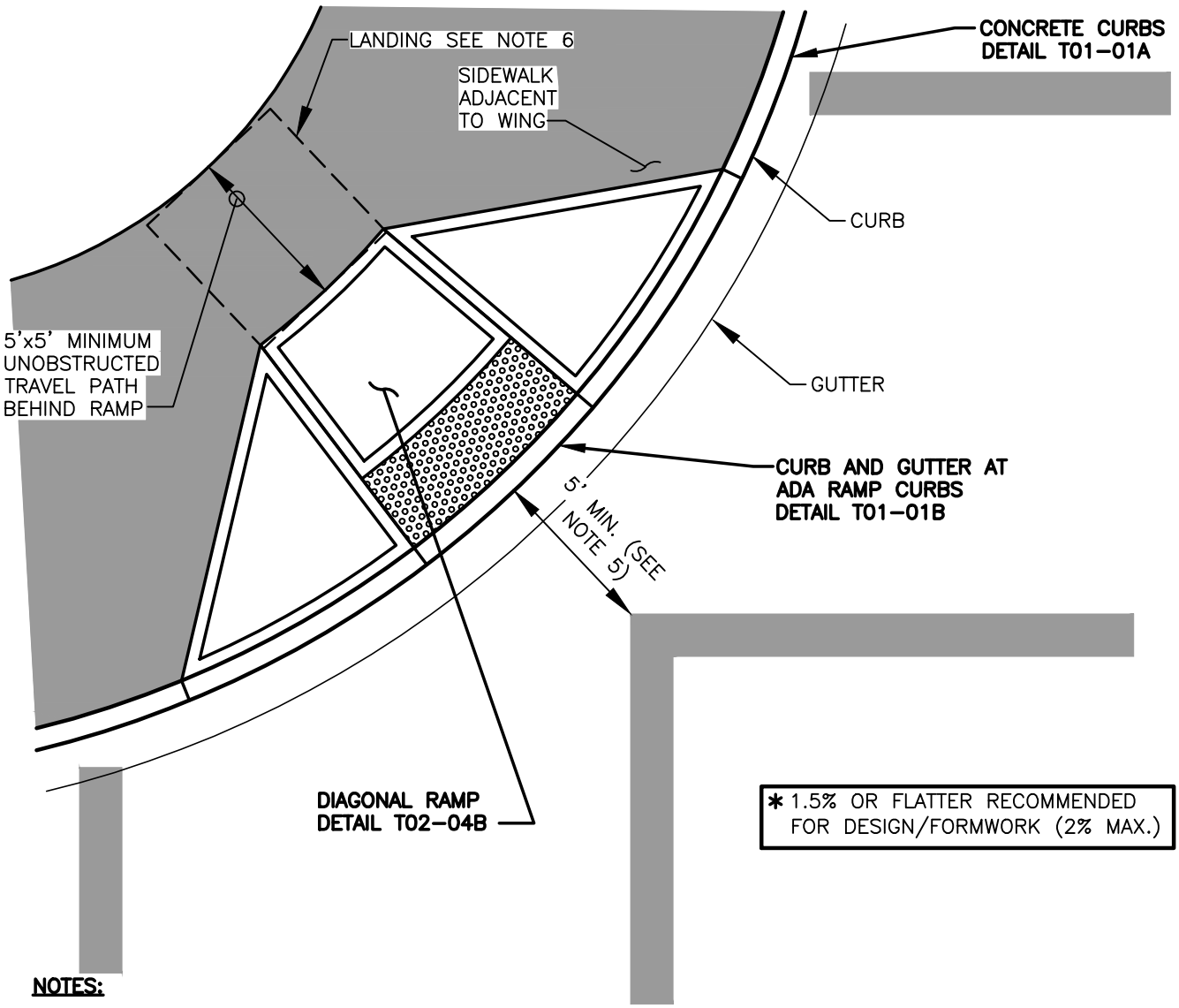

NOTES:

1. RAMPS TO BE CENTERED IN CROSSWALKS.
2. RAMPS TO BE CONSTRUCTED SEPARATELY FROM SIDEWALK AND ISOLATED BY EXPANSION JOINT MATERIAL.
3. CROSSWALKS TO BE CENTERED ON SIGNAL POLE. WHERE NO SIGNAL POLE EXISTS, CROSSWALK LOCATION SHALL BE PER APPROVED SITE PLAN.
4. SURROUNDING SIDEWALK CROSS SLOPE TO BE 2% MAX. RADIALLY AROUND CORNER SECTION.
5. IF A SINGLE DIAGONAL CURB RAMP IS PERMITTED, 5' MIN. CLEAR SPACE SHALL BE PROVIDED FOR MANEUVERING ROOM IN CROSSWALK.
6. AT THE TOP EACH RAMP A 5'x5' LANDING AREA SHALL BE CONSTRUCTED AND THE LONGITUDINAL CROSS SLOPE SHALL NOT EXCEED 2%* EACH DIRECTION.
7. WHEN CONSTRUCTING ADA RAMP AT A SIGNALIZED INTERSECTION MAINTAIN 3'–6" HEIGHT FROM LANDING AREA TO CENTER OF PEDESTRIAN PUSHBUTTON.
8. SEE **DOUBLE DIAGONAL RAMP PLACEMENT FOR TRAFFIC SIGNAL STANDARDS DETAIL T20–06A** IF ADA RAMPS ARE BEING INSTALLED AT A SIGNALIZED INTERSECTION.
9. TYPE A–1 AND E–1 CURB (SEE **CONCRETE CURBS DETAIL T01–01A**) POURED SEPARATELY FROM RAMPS.
10. ALL RAMPS IN AREAS ZONED CITY CENTER OR WHERE THE HERITAGE SIDEWALK IS CONSTRUCTED ARE REQUIRED TO BE CONSTRUCTED WITH BRICK UNIT PAVERS, SEE **BRICK UNIT PAVER PATTERN T02–16** FOR BRICK LAYOUTS.

REV NO.	DATE	BY	APPR
1	8/08	RAW	MHA
2	7/14	RAW	MHA
3	3/16	RAW	MHA
4	3/17	RAW	MHA
5	4/18	RAW	MHA
6	9/21	RAW	MHA

PUBLIC WORKS – STREETS AND TRANSPORTATION

APPROVED BY: M H Abdalla
ENGINEER MANAGER
APPROVED DATE: 9/1/2021

CITY OF Vancouver WASHINGTON

SINGLE DIAGONAL RAMP REPLACEMENT

STANDARD PLAN NUMBER T02–04A

I:\CITYAPPS\AUTOCAD\STD_DETAILS\DRAWING_FILES\T02–04A

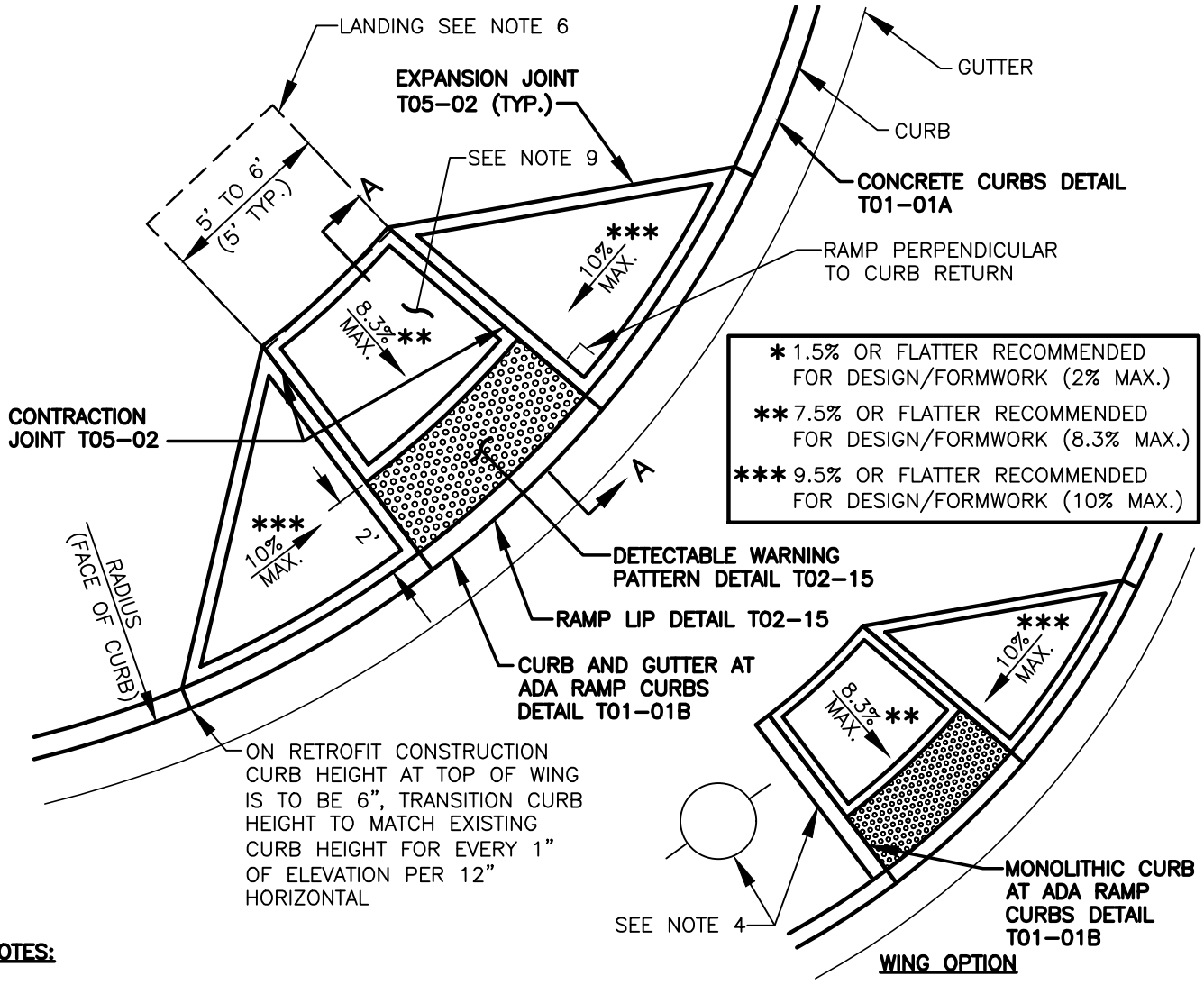

NOTES:

1. EXISTING CURB AND SIDEWALK TO BE SAWCUT AND REMOVED FOR INSTALLATION OF NEW RAMP.
2. RAMP MAY BE USED MID–BLOCK OR ON INTERSECTION RADII.
3. RAMP TO BE CONSTRUCTED SEPARATELY FROM SIDEWALK AND ISOLATED BY EXPANSION JOINT MATERIAL.
4. RAMP WINGS MAY BE REPLACED WITH A MONOLITHIC CURB **ADA CURB RAMPS DETAIL T01–01B** IF OBSTRUCTION OR PLANTER PREVENTS PEDESTRIAN TRAFFIC IN WING AREA.
5. SEE SECTION A–A ON **STANDARD LANDING CROSS SECTIONS – A–A AND B–B DETAIL T02–11**.
6. AT THE TOP OF EACH RAMP A 5'x5' LANDING AREA SHALL BE CONSTRUCTED AND THE LONGITUDINAL CROSS SLOPE SHALL NOT EXCEED 2%* EACH DIRECTION.
7. WING DIMENSIONS MAY VARY TO MEET REQUIRED SLOPE.
8. IF THE MAXIMUM SLOPE OF 8.3%** CANNOT BE ACHIEVED DUE TO THE SLOPE OF THE EXISTING SIDEWALK, THE LENGTH OF THE CURB RAMP SHALL NOT BE REQUIRED TO BE LONGER THAN 15 FEET REGARDLESS OF THE RESULTING RAMP SLOPE.
9. RAMP CROSS SLOPE SHALL BE 2%* MAXIMUM.
10. TYPE A–1 AND E–1 CURB (SEE **CONCRETE CURBS DETAIL T01–01A**) POURED SEPARATELY FROM RAMPS.
11. ALL RAMPS IN AREAS ZONED CITY CENTER OR WHERE THE HERITAGE SIDEWALK IS CONSTRUCTED ARE REQUIRED TO BE CONSTRUCTED WITH BRICK UNIT PAVERS, SEE **BRICK UNIT PAVER PATTERN T02–16** FOR BRICK LAYOUTS.

REV NO.	DATE	BY	APPR
1	7/14	RAW	MHA
2	1/15	RAW	MHA
3	3/16	RAW	MHA
4	3/17	RAW	MHA
5	4/18	RAW	MHA
6	9/21	RAW	MHA

PUBLIC WORKS – STREETS AND TRANSPORTATION

APPROVED BY: M H Abdalla
ENGINEER MANAGER
APPROVED DATE: 9/1/2021

CITY OF Vancouver WASHINGTON

DIAGONAL RAMP CONSTRUCTION

STANDARD PLAN NUMBER T02–04B

I:\CITYAPPS\AUTOCAD\STD_DETAILS\DRAWING_FILES\T02–04B

NOTES:

1. RAMPS TO BE CENTERED IN CROSSWALKS.
2. RAMPS TO BE CONSTRUCTED SEPARATELY AND ISOLATED BY EXPANSION JOINT MATERIAL.
3. RAMP WING MAY BE REPLACED WITH MONOLITHIC CURB SEE **ADA RAMP CURB DETAIL T01–01B** IF OBSTRUCTION OR PLANTER PREVENTS PEDESTRIAN TRAFFIC IN WING AREA.
4. SURROUNDING SIDEWALK CROSS SLOPE TO BE 2%* MAX. RADIALLY AROUND CORNER SECTION.
5. WHEN CONSTRUCTING ADA RAMP AT A SIGNALIZED INTERSECTION MAINTAIN 3'–6" HEIGHT FROM LANDING AREA TO CENTER OF PEDESTRIAN PUSHBUTTON.
6. AT THE TOP OF EACH RAMP A 5'X5' LANDING AREA SHALL BE CONSTRUCTED AND THE LONGITUDINAL CROSS SLOPE SHALL NOT EXCEED 2%* EACH DIRECTION.
7. RIGHT OF WAY LINE SHALL BE 1' BEHIND SIDEWALK UNLESS TRAFFIC SIGNAL CONTROLLER CABINET IS IN AREA, THEN RIGHT OF WAY LINE SHALL BE 1' BEHIND CONTROLLER CABINET CONCRETE PAD. **SEE T20–06B** FOR ADDITIONAL INFORMATION.
8. TYPE A–1 AND E–1 CURB (SEE **CONCRETE CURBS DETAIL T01–01A**) POURED SEPARATELY FROM RAMPS.
9. ALL RAMPS IN AREAS ZONED CITY CENTER OR WHERE THE HERITAGE SIDEWALK IS CONSTRUCTED ARE REQUIRED TO BE CONSTRUCTED WITH BRICK UNIT PAVERS, SEE **BRICK UNIT PAVER PATTERN T02–16** FOR BRICK LAYOUTS.

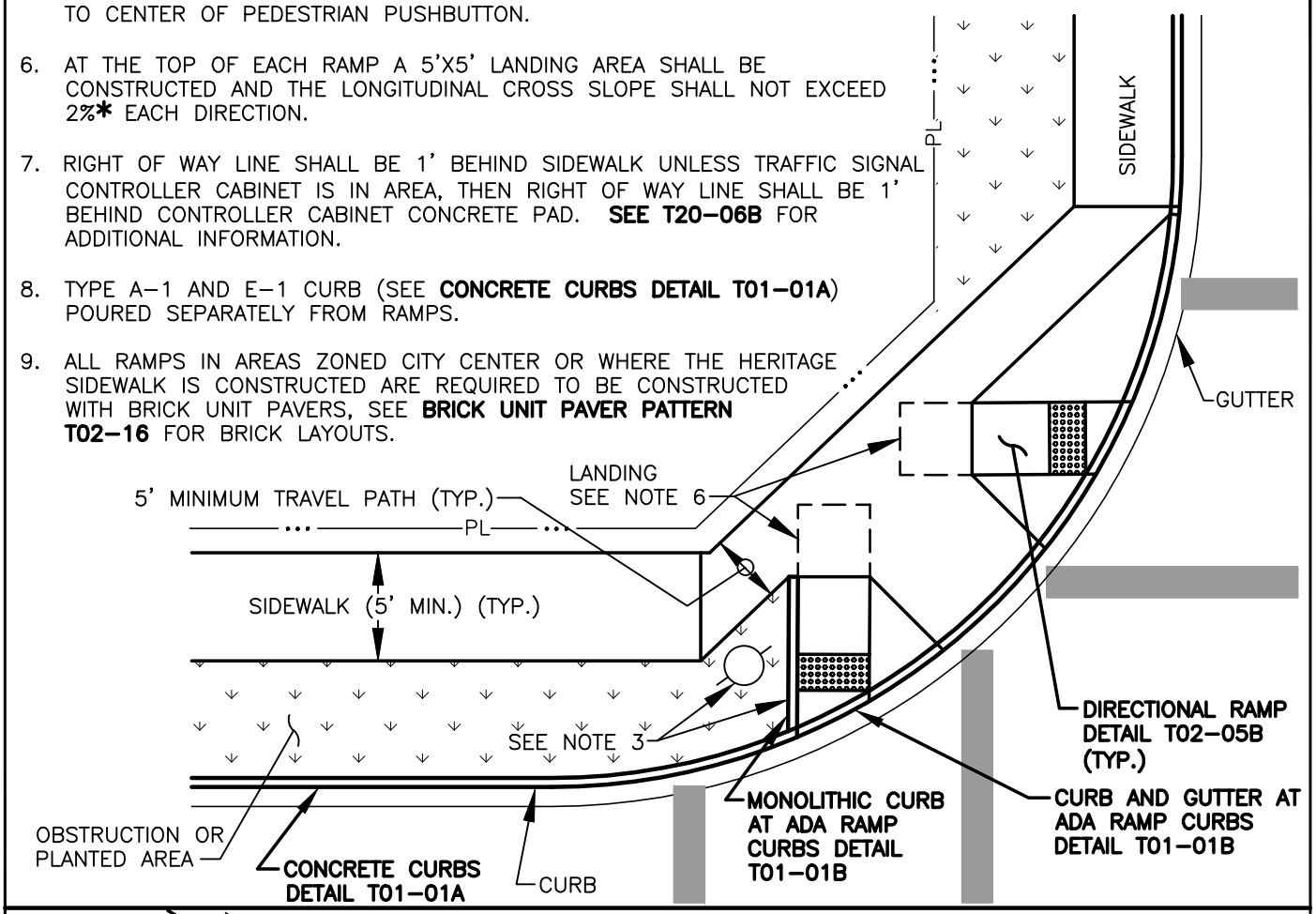

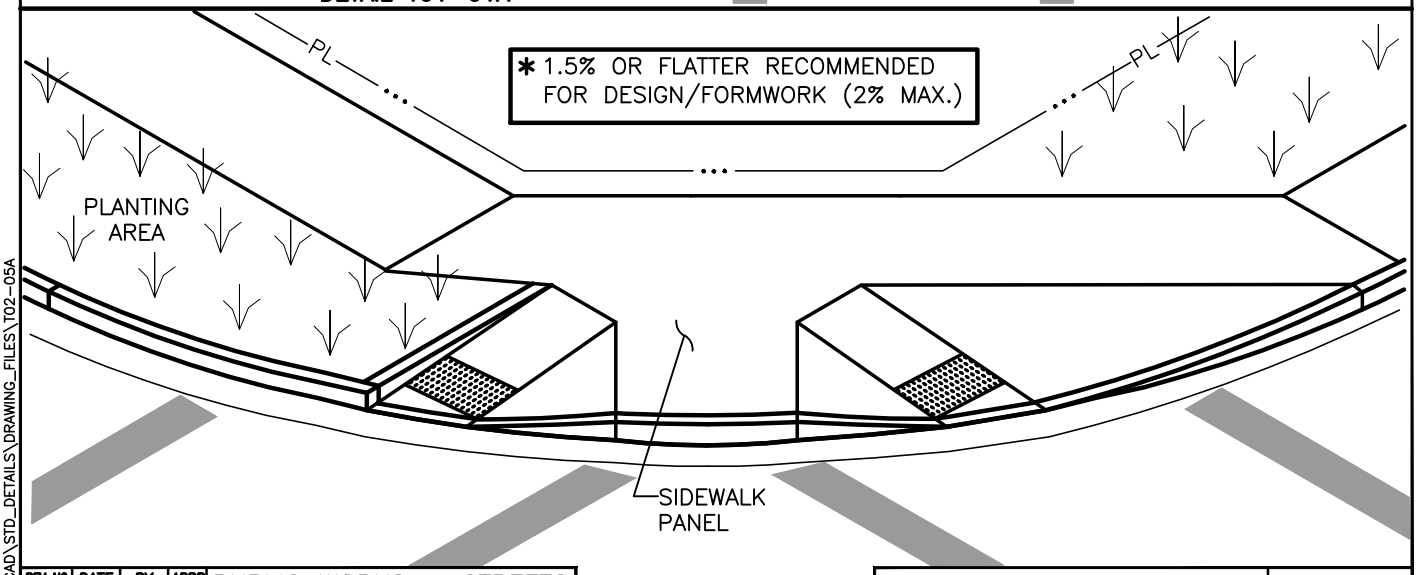

REV NO.	DATE	BY	APPR
1	8/08	RAW	MHA
2	7/14	RAW	MHA
3	3/16	RAW	MHA
4	3/17	RAW	MHA
5	4/18	RAW	MHA
6	9/21	RAW	MHA

PUBLIC WORKS – STREETS AND TRANSPORTATION

APPROVED BY: M H Abdalla
ENGINEER MANAGER
APPROVED DATE: 9/1/2021

CITY OF Vancouver WASHINGTON

DOUBLE DIRECTIONAL RAMP PLACEMENT

STANDARD PLAN NUMBER
T02–05A

P:\CITYAPPS\AUTOCAD\STD_DETAILS\DRAWING_FILES\T02–05A

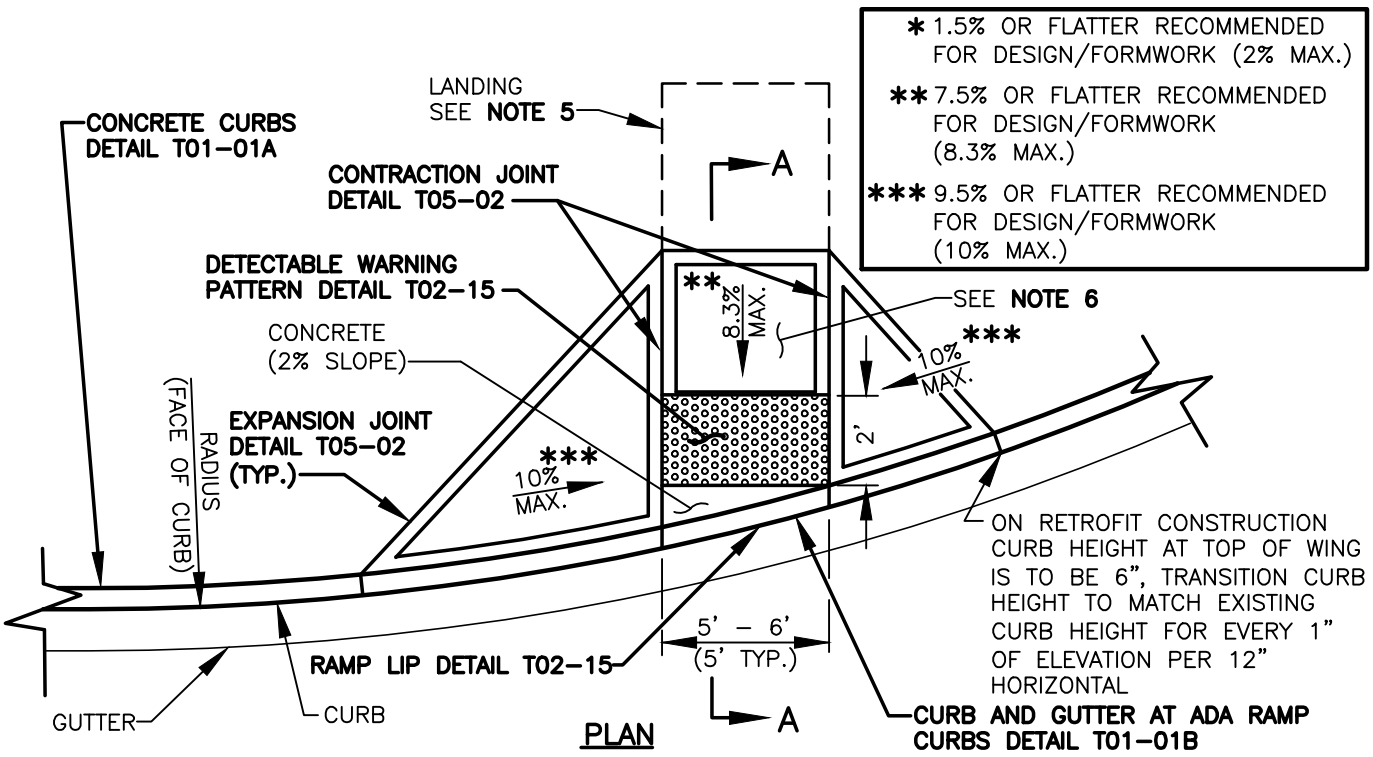

PLAN

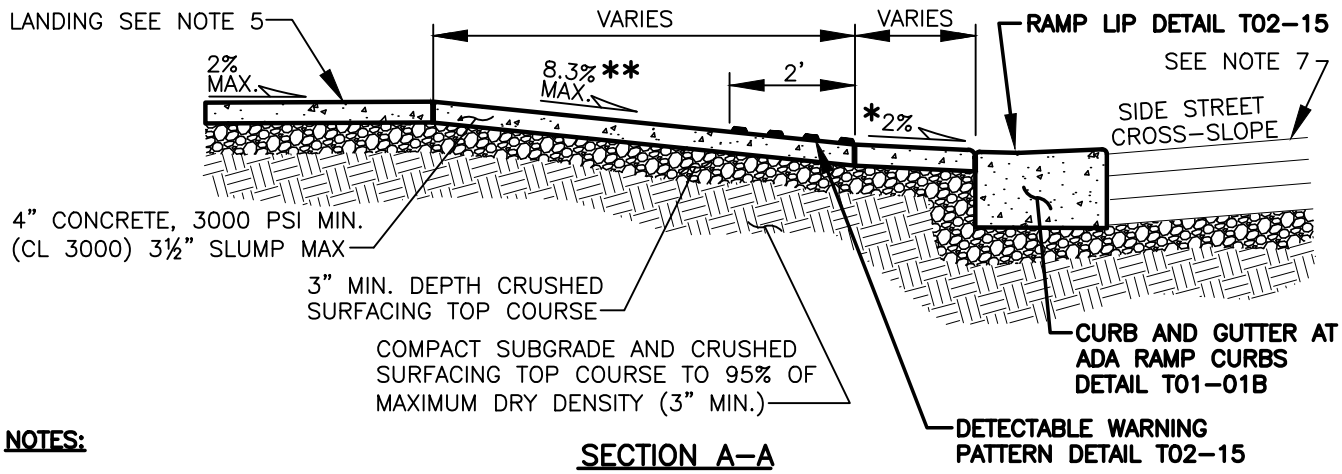

SECTION A–A

NOTES:

1. EXISTING CURB AND SIDEWALK TO BE SAWCUT AND REMOVED FOR INSTALLATION OF NEW RAMP.
2. RAMP TO BE CENTERED IN CROSSWALK.
3. RAMP TO BE CONSTRUCTED SEPARATELY FROM SIDEWALK AND ISOLATED BY EXPANSION JOINT MATERIAL.
4. RAMP WING MAY BE REPLACED WITH MONOLITHIC CURB SEE **ADA RAMP CURB DETAIL T01–01B** IF OBSTRUCTION OR PLANTER PREVENTS PEDESTRIAN TRAFFIC IN WING AREA.
5. AT THE TOP OF EACH RAMP A 5'X5' LANDING AREA SHALL BE CONSTRUCTED AND THE LONGITUDINAL CROSS SLOPE SHALL NOT EXCEED 2%* EACH DIRECTION.
6. IF THE MAXIMUM SLOPE OF 8.3%** CANNOT BE ACHIEVED DUE TO THE SLOPE OF THE EXISTING SIDEWALK, THE LENGTH OF THE CURB RAMP SHALL NOT BE REQUIRED TO BE LONGER THAN 15 FEET REGARDLESS OF THE RESULTING RAMP SLOPE.
7. SEE **PAVEMENT RESTORATION/WIDENING AT CURB DETAIL T05–01A** WHEN CUTTING EXISTING CURB.
8. RAMP CROSS SLOPE SHALL BE 2%* MAXIMUM.
9. TYPE A–1 AND E–1 CURB (SEE **CONCRETE CURBS DETAIL T01–01A**) POURED SEPARATELY FROM RAMPS.
10. ALL RAMPS IN AREAS ZONED CITY CENTER OR WHERE THE HERITAGE SIDEWALK IS CONSTRUCTED ARE REQUIRED TO BE CONSTRUCTED WITH BRICK UNIT PAVERS, SEE **BRICK UNIT PAVER PATTERN T02–16** FOR BRICK LAYOUTS.

REV NO.	DATE	BY	APPR
1	7/14	RAW	MHA
2	1/15	RAW	MHA
3	3/16	RAW	MHA
4	3/17	RAW	MHA
5	4/18	RAW	MHA
6	9/21	RAW	MHA

PUBLIC WORKS – STREETS AND TRANSPORTATION

APPROVED BY: M H Abdalla
ENGINEER MANAGER
APPROVED DATE: 9/1/2021

CITY OF Vancouver WASHINGTON

DIRECTIONAL RAMP CONSTRUCTION

STANDARD PLAN NUMBER T02–05B

I:\CITYAPPS\AUTOCAD\STD_DETAILS\DRAWING_FILES\T02–05B

NOTES:

1. EXISTING CURB AND SIDEWALK TO BE SAWCUT AND REMOVED FOR INSTALLATION OF NEW RAMPS.
2. RAMPS TO BE POURED SEPARATELY AND ISOLATED BY EXPANSION JOINT MATERIAL.
3. CURB AND RAMP DIMENSIONS MAY VARY TO MEET REQUIRED SLOPE.
4. DOUBLE RAMPS ALLOWED ONLY IF CURB RETURN RADIUS IS GREATER THAN OR EQUAL TO 25'.
5. IF THE AREA BEHIND THE SIDEWALK IS VEGETATED, THE BACK CURB MAY BE REPLACED WITH A SLOPE NO STEEPER THAN 4:1.
6. WHEN CONSTRUCTING ADA RAMP AT A SIGNALIZED INTERSECTION MAINTAIN 3'–6" HEIGHT FROM LANDING AREA TO CENTER OF PEDESTRIAN PUSHBUTTON.
7. TYPE A–1 AND E–1 CURB (SEE **CONCRETE CURBS DETAIL T01–01A**) POURED SEPARATELY FROM RAMPS.
8. **ADA RAMP** AND **GRADE CORRECTION CURBS** POURED MONOLITHICALLY.

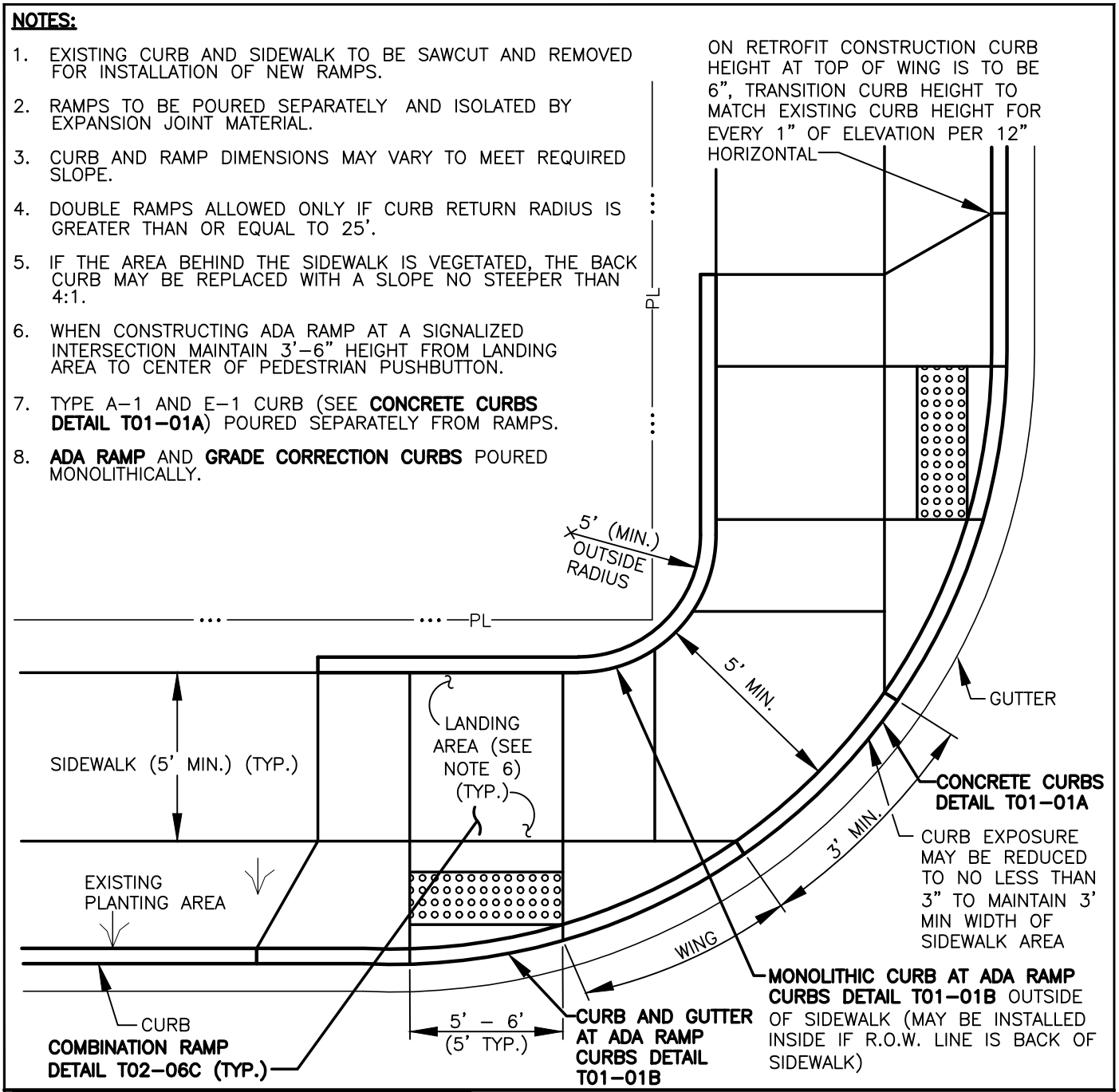

THIS TYPE OF RAMP IS ONLY TO BE USED IN EXISTING RESTRICTED RIGHT OF WAY AREAS. DOUBLE RAMP SHOWN. SINGLE RAMP MAY BE USED AT SOME INSTALLATIONS.

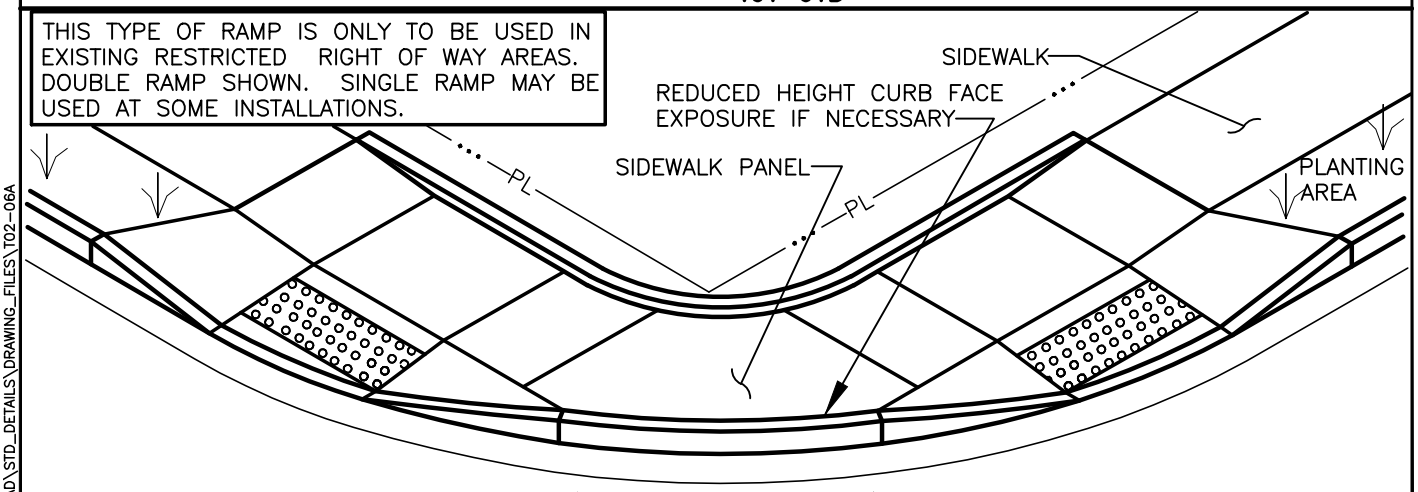

REV NO.	DATE	BY	APPR
1	8/04	RAW	MHA
2	7/14	RAW	MHA
3	3/16	RAW	MHA
4	3/17	RAW	MHA
5	4/18	RAW	MHA
6	9/21	RAW	MHA

PUBLIC WORKS – STREETS AND TRANSPORTATION

APPROVED BY: M H Abdalla
ENGINEER MANAGER
APPROVED DATE: 9/1/2021

CITY OF Vancouver WASHINGTON

DOUBLE COMBINATION RAMP PLACEMENT – A

STANDARD PLAN NUMBER T02–06A

P:\CITYAPPS\AUTOCAD\STD_DETAILS\DRAWING_FILES\T02–06A

NOTES:

1. RAMPS TO BE CENTERED IN CROSSWALKS.
2. RAMPS TO BE CONSTRUCTED SEPARATELY AND ISOLATED BY EXPANSION JOINT MATERIAL.
3. IF THE AREA BEHIND THE SIDEWALK IS VEGETATED, THE BACK CURB MAY BE REPLACED WITH A SLOPE NO STEEPER THAN 4:1.
4. WHEN CONSTRUCTING ADA RAMP AT A SIGNALIZED INTERSECTION MAINTAIN 3'–6" HEIGHT FROM LANDING AREA TO CENTER OF PEDESTRIAN PUSHBUTTON.
5. TYPE A–1 AND E–1 CURB (SEE **CONCRETE CURB DETAIL T01–01A**) POURED SEPARATELY FROM RAMPS.
6. **ADA RAMP** AND **GRADE CORRECTION CURBS** POURED MONOLITHICALLY.

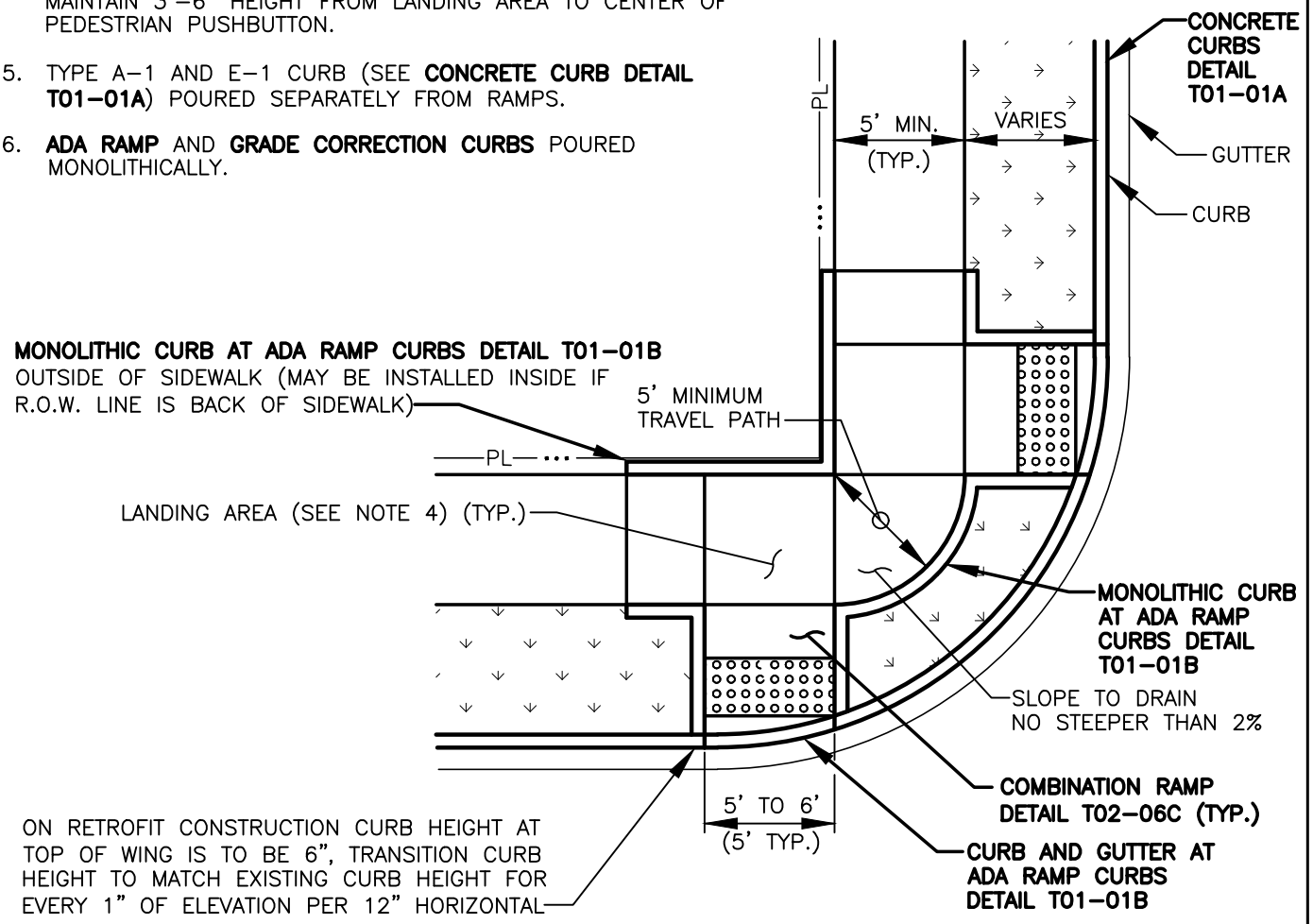

THIS TYPE OF RAMP IS ONLY TO BE USED IN EXISTING RESTRICTED RIGHT OF WAY AREAS. DOUBLE RAMP SHOWN.

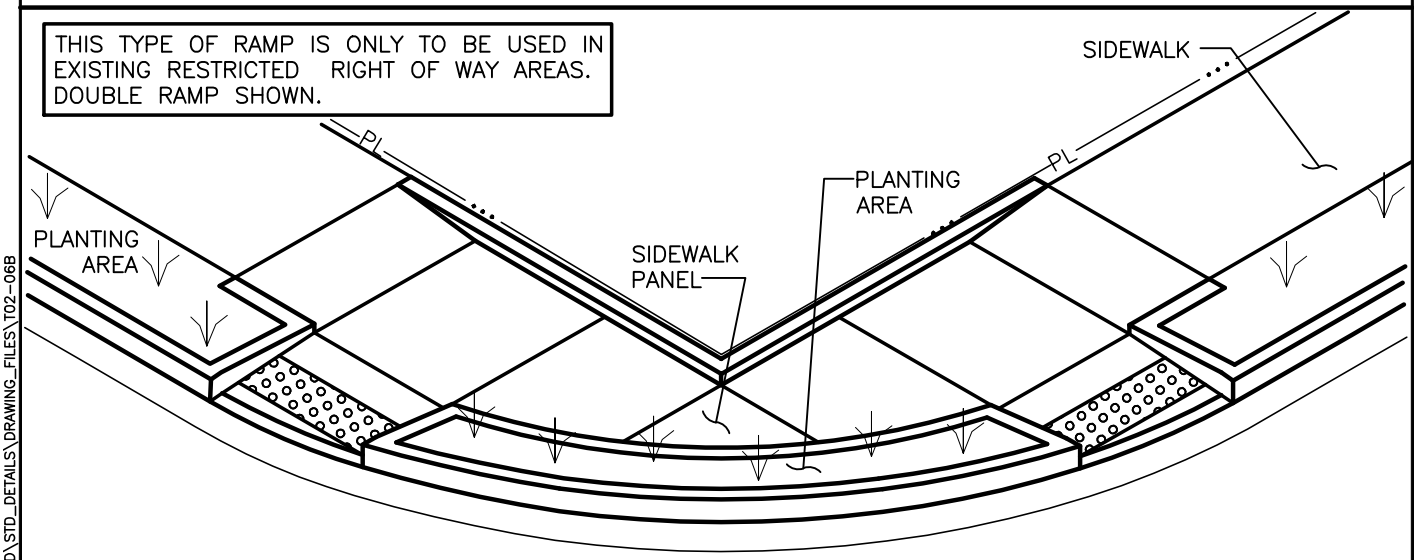

REV NO.	DATE	BY	APPR
1	8/08	RAW	MHA
2	7/14	RAW	MHA
3	3/16	RAW	MHA
4	3/17	RAW	MHA
5	4/18	RAW	MHA
6	9/21	RAW	MHA

PUBLIC WORKS – STREETS AND TRANSPORTATION

APPROVED BY: M H Abdalla
ENGINEER MANAGER
APPROVED DATE: 9/1/2021

CITY OF Vancouver WASHINGTON

DOUBLE COMBINATION RAMP PLACEMENT – B

STANDARD PLAN NUMBER T02–06B

I:\CITYAPPS\AUTOCAD\STD_DETAILS\DRAWING_FILES\T02–06B

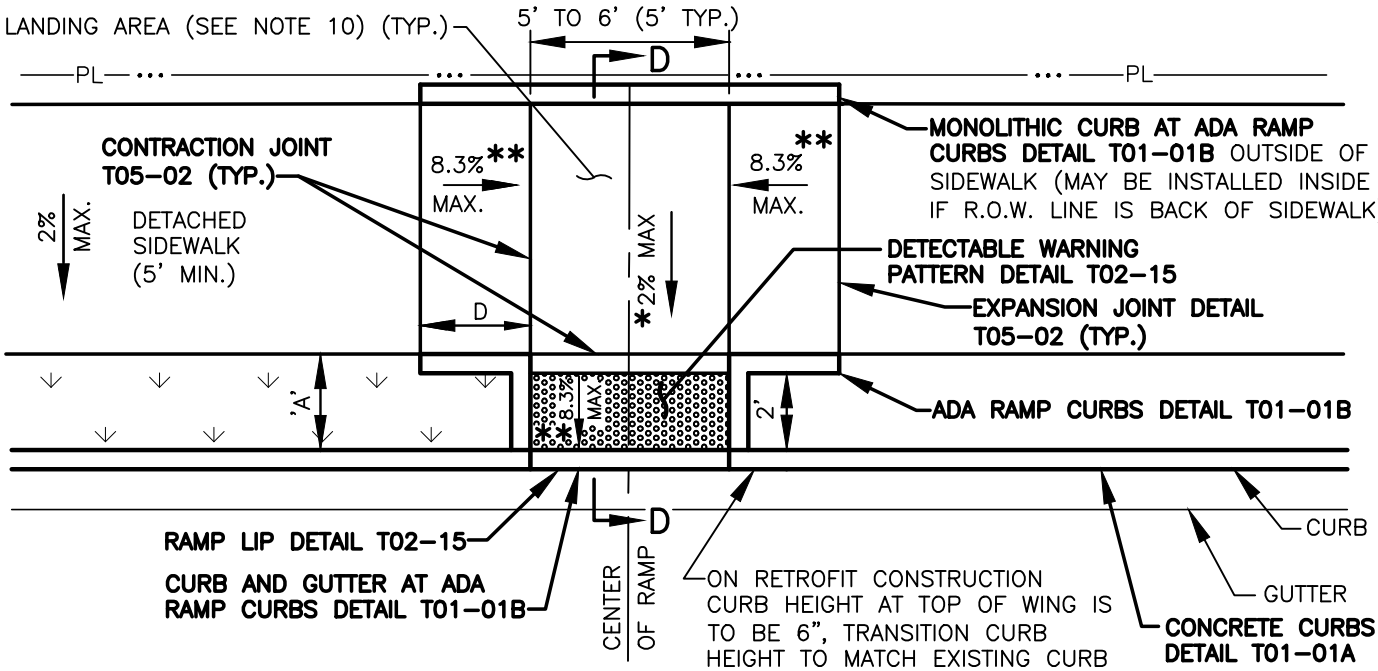

NOTES:

1. EXISTING CURB AND SIDEWALK TO BE SAWCUT AND REMOVED FOR INSTALLATION OF NEW RAMP.
2. RAMP MAY BE USED MID BLOCK OR ON INTERSECTION RADIUS.
3. RAMP TO BE CENTERED IN CROSSWALK.
4. RAMPS TO BE CONSTRUCTED SEPARATELY FROM SIDEWALK AND ISOLATED BY EXPANSION JOINT MATERIAL.
5. WING DIMENSIONS MAY VARY TO MEET REQUIRED SLOPE.
6. IF THE AREA BEHIND THE SIDEWALK IS VEGETATED, THE BACK CURB MAY BE REPLACED BY A SLOPE NO STEEPER THAN 4:1.
7. DIMENSION 'A' VARIES DEPENDING UPON THE WIDTH OF THE PLANTER STRIP D=6.00−C, 2' MIN.
8. SEE SECTION D−D ON **STANDARD LANDING CROSS SECTIONS − C−C AND D−D DETAIL T02−13.**
9. WHEN CONSTRUCTING ADA RAMP AT A SIGNALIZED INTERSECTION MAINTAIN 3'−6" HEIGHT FROM LANDING AREA TO CENTER OF PEDESTRIAN PUSHBUTTON.
10. ON RETROFIT CONSTRUCTION PROJECTS TRANSITION FROM RAMP 2%* CROSS SLOPE TO MATCH SLOPE OF EXISTING SIDEWALK OVER A 5' AREA.
11. TYPE A−1 AND E−1 CURB (SEE **CONCRETE CURBS DETAIL T01−01A**) POURED SEPARATELY FROM RAMPS.
12. **ADA RAMP** AND **GRADE CORRECTION CURBS** POURED MONOLITHICALLY.

* 1.5% OR FLATTER RECOMMENDED FOR DESIGN/FORMWORK (2% MAX.)

** 7.5% OR FLATTER RECOMMENDED FOR DESIGN/FORMWORK (8.3% MAX.)

FOR USE WHEN PLANTING AREA IS LESS THAN 6' WIDE.

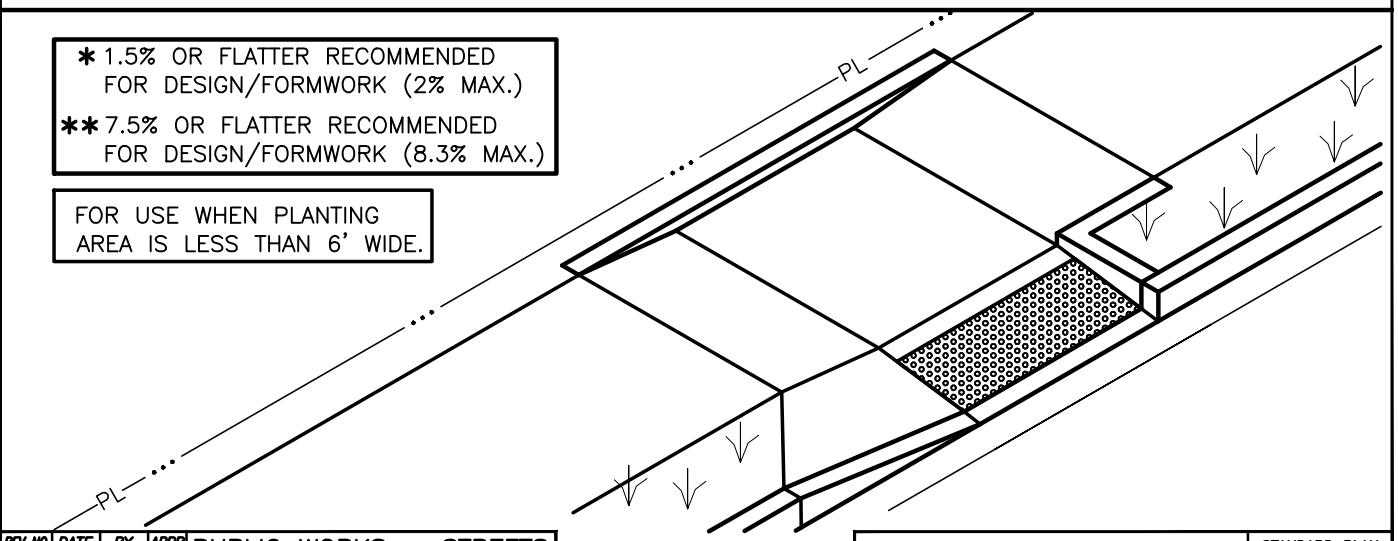

REV NO.	DATE	BY	APPR
1	7/14	RAW	MHA
2	1/15	RAW	MHA
3	3/16	RAW	MHA
4	3/17	RAW	MHA
5	4/18	RAW	MHA
6	9/21	RAW	MHA

PUBLIC WORKS − STREETS AND TRANSPORTATION

APPROVED BY: M H Abdalla
ENGINEER MANAGER

APPROVED DATE: 9/1/2021

CITY OF Vancouver WASHINGTON

COMBINATION RAMP CONSTRUCTION

STANDARD PLAN NUMBER

T02−06C

P:\CITYAPPS\AUTOCAD\STD_DETAILS\DRAWING_FILES\T02−06C

NOTES:

1. EXISTING CURB AND SIDEWALK TO BE SAWCUT AND REMOVED FOR INSTALLATION OF NEW RAMPS.
2. RAMPS TO BE POURED SEPARATELY FROM SIDEWALK AND ISOLATED BY EXPANSION JOINT MATERIAL.
3. WING DIMENSIONS MAY VARY TO MEET REQUIRED SLOPE.
4. DOUBLE RAMPS ALLOWED ONLY IF RADIUS IS GREATER THAN OR EQUAL TO 25'.
5. IF THE AREA BEHIND THE SIDEWALK IS VEGETATED, THE BACK CURB MAY BE REPLACED WITH A SLOPE NO STEEPER THAN 4:1.
6. WHEN CONSTRUCTING ADA RAMP AT A SIGNALIZED INTERSECTION MAINTAIN 3'–6" HEIGHT FROM LANDING AREA TO CENTER OF PEDESTRIAN PUSHBUTTON.
7. RIGHT OF WAY LINE SHALL BE 1' BEHIND SIDEWALK UNLESS TRAFFIC SIGNAL CONTROLLER CABINET IS IN AREA, THEN RIGHT OF WAY LINE SHALL BE 1' BEHIND CONTROLLER CABINET CONCRETE PAD. SEE **DETAIL T20–06C** FOR ADDITIONAL INFORMATION.
8. TYPE A–1 AND E–1 CURB (SEE **CONCRETE CURBS DETAIL T01–01A**) POURED SEPARATELY FROM RAMPS.
9. **ADA RAMP** AND **GRADE CORRECTION CURBS** POURED MONOLITHICALLY.

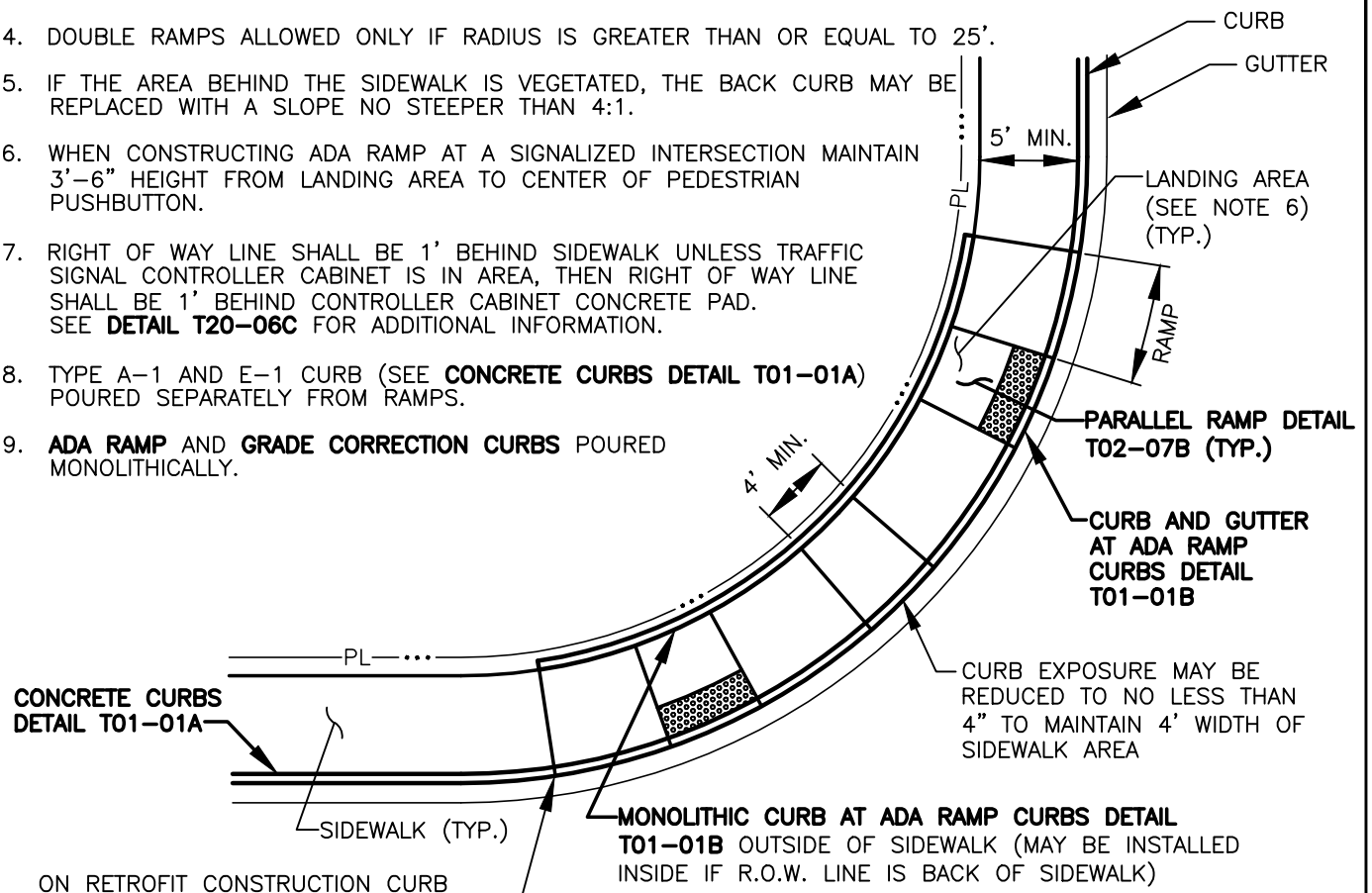

IF THE MAXIMUM SLOPE OF 8.3%** CANNOT BE ACHIEVED DUE TO THE SLOPE OF THE EXISTING SIDEWALK, THE LENGTH OF THE CURB RAMP SHALL NOT BE REQUIRED TO BE LONGER THAN 15 FEET REGARDLESS OF THE RESULTING RAMP SLOPE.

THIS TYPE OF RAMP IS ONLY TO BE USED IN EXISTING RESTRICTED RIGHT OF WAY AREAS, DOUBLE RAMP SHOWN. SINGLE RAMP MAY BE USED AT SOME INSTALLATIONS.

** 7.5% OR FLATTER RECOMMENDED FOR DESIGN/FORMWORK (8.3% MAX.)

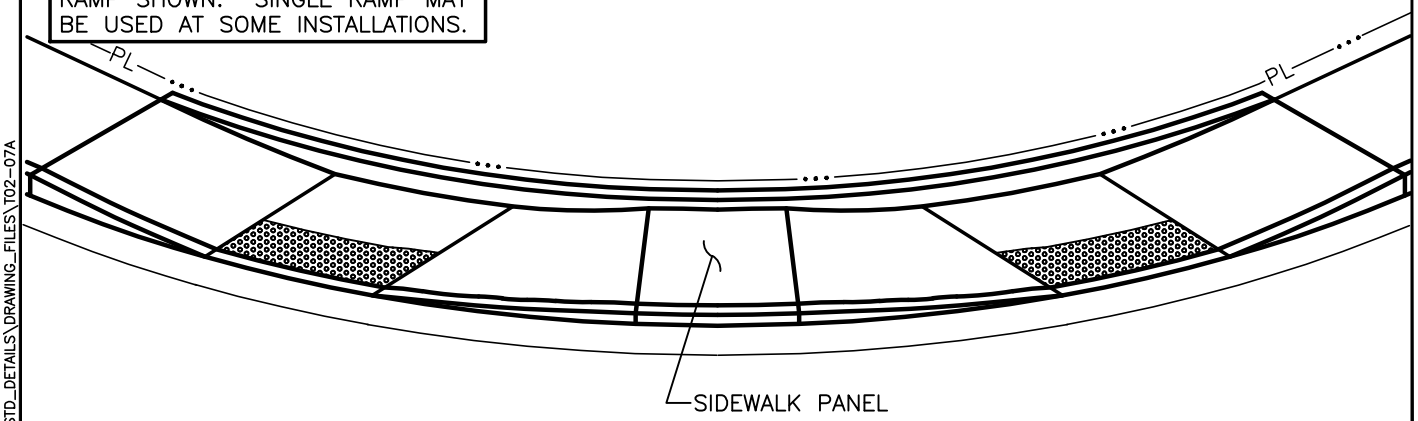

REV NO.	DATE	BY	APPR
1	8/08	RAW	MHA
2	7/14	RAW	MHA
3	3/16	RAW	MHA
4	3/17	RAW	MHA
5	4/18	RAW	MHA
6	9/21	RAW	MHA

PUBLIC WORKS – STREETS AND TRANSPORTATION

APPROVED BY: ENGINEER MANAGER

APPROVED DATE: 9/1/2021

CITY OF Vancouver WASHINGTON

DOUBLE PARALLEL RAMP PLACEMENT

STANDARD PLAN NUMBER T02–07A

I:\CITYAPPS\AUTOCAD\STD_DETAILS\DRAWING_FILES\T02–07A

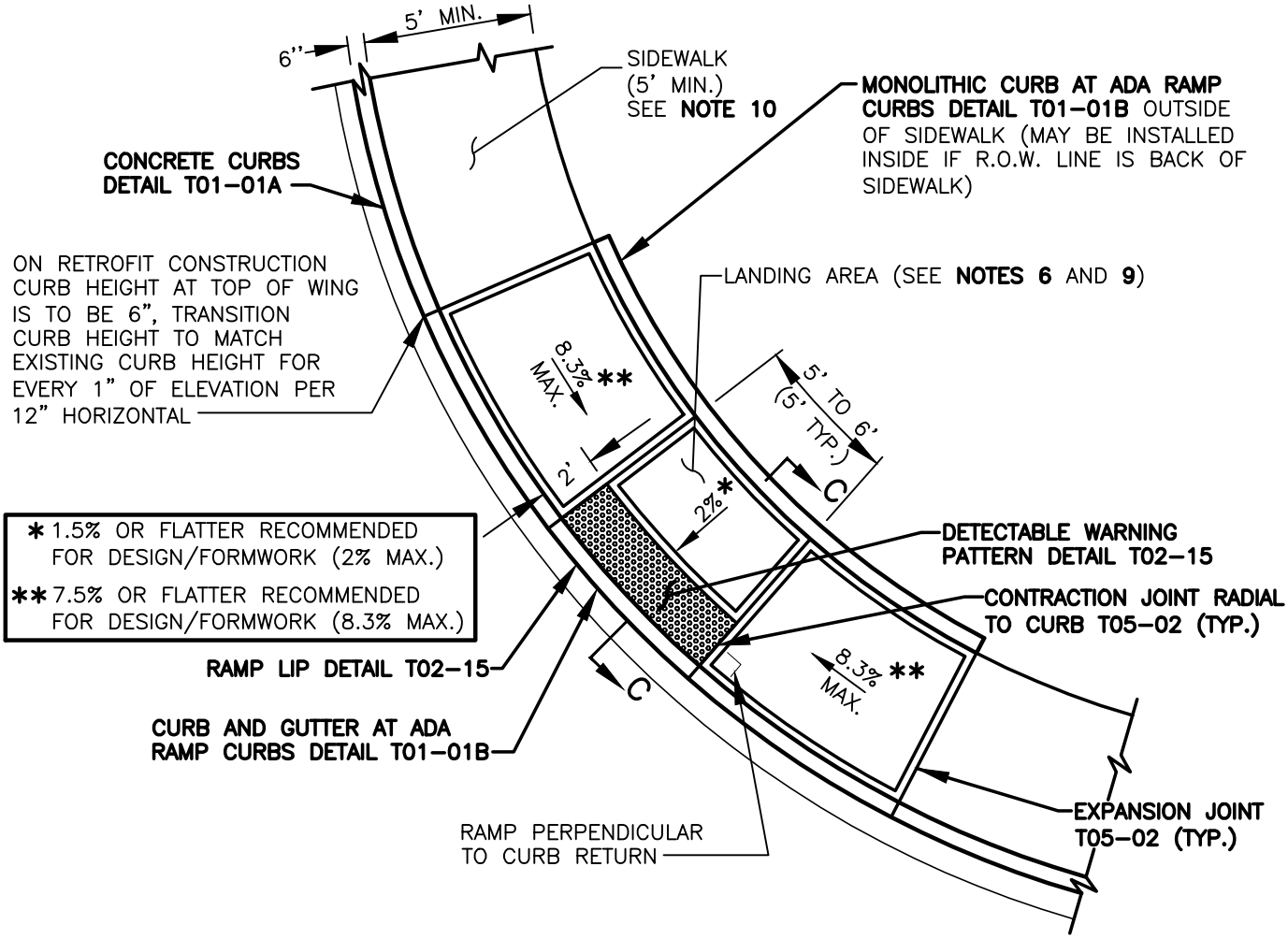

NOTES:

1. RAMPS SHALL HAVE A MAXIMUM 1:12 SLOPE.
2. EXISTING CURB AND SIDEWALK TO BE SAWCUT AND REMOVED FOR INSTALLATION OF NEW RAMP.
3. RAMP MAY BE USED MID–BLOCK OR ON INTERSECTION RADIUS.
4. RAMP TO BE CENTERED IN CROSSWALK.
5. RAMPS TO BE CONSTRUCTED SEPARATELY FROM SIDEWALK AND ISOLATED BY EXPANSION JOINT MATERIAL.
6. SEE SECTION C–C ON **STANDARD LANDING CROSS SECTIONS – C–C AND D–D DETAIL T02–13**.
7. IF THE AREA BEHIND THE SIDEWALK IS VEGETATED, THE BACK CURB MAY BE REPLACED WITH A SLOPE NO STEEPER THAN 4:1.
8. IF THE MAXIMUM SLOPE OF 8.3%** CANNOT BE ACHIEVED DUE TO THE SLOPE OF THE EXISTING SIDEWALK, THE LENGTH OF THE CURB RAMP SHALL NOT BE REQUIRED TO BE LONGER THAN 15 FEET REGARDLESS OF THE RESULTING RAMP SLOPE.
9. WHEN CONSTRUCTING ADA RAMP AT A SIGNALIZED INTERSECTION MAINTAIN 3'–6" HEIGHT FROM LANDING AREA TO CENTER OF PEDESTRIAN PUSHBUTTON.
10. ON RETROFIT CONSTRUCTION PROJECTS TRANSITION FROM RAMP 2%* CROSS SLOPE TO MATCH SLOPE OF EXISTING SIDEWALK OVER A 5' AREA.
11. TYPE A–1 AND E–1 CURB (SEE **CONCRETE CURBS DETAIL T01–01A**) POURED SEPARATELY FROM RAMPS.
12. **ADA RAMP** AND **GRADE CORRECTION CURBS** POURED MONOLITHICALLY.

REV NO.	DATE	BY	APPR
1	7/14	RAW	MHA
2	1/15	RAW	MHA
3	3/16	RAW	MHA
4	3/17	RAW	MHA
5	4/18	RAW	MHA
6	9/21	RAW	MHA

PUBLIC WORKS – STREETS AND TRANSPORTATION

APPROVED BY: M H Abdalla
ENGINEER MANAGER

APPROVED DATE: 9/1/2021

CITY OF Vancouver WASHINGTON

PARALLEL RAMP CONSTRUCTION

STANDARD PLAN NUMBER

T02–07B

I:\CITYAPPS\AUTOCAD\STD_DETAILS\DRAWING_FILES\T02–07B

NOTES:

1. EXISTING CURB AND SIDEWALK TO BE SAWCUT AND REMOVED FOR INSTALLATION OF NEW RAMP.
2. RAMP MAY BE USED MID BLOCK OR ON INTERSECTION RADIUS.
3. RAMP TO BE CENTERED IN CROSSWALK.
4. RAMPS TO BE CONSTRUCTED SEPARATELY FROM SIDEWALK, AND ISOLATED BY EXPANSION JOINT MATERIAL.
5. FOR SECTIONS A–A AND B–B, SEE **STANDARD LANDING CROSS SECTIONS – A–A AND B–B DETAIL T02–11**.
6. AT THE TOP OF EACH RAMP A 5'X5' LANDING AREA SHALL BE CONSTRUCTED AND THE LONGITUDINAL CROSS SLOPE SHALL NOT EXCEED 2%* EACH DIRECTION.
7. IF THE MAXIMUM SLOPE OF 8.3%** CANNOT BE ACHIEVED DUE TO THE SLOPE OF THE EXISTING SIDEWALK, THE LENGTH OF THE CURB RAMP SHALL NOT BE REQUIRED TO BE LONGER THAN 15 FEET REGARDLESS OF THE RESULTING RAMP SLOPE.
8. RAMP CROSS SLOPE SHALL BE 2%* MAXIMUM.
9. TYPE A–1 AND E–1 CURB (SEE **CONCRETE CURBS DETAIL T01–0A1**) POURED SEPARATELY FROM RAMPS.
10. **ADA RAMP** AND **GRADE CORRECTION CURBS** POURED MONOLITHICALLY.
11. ALL RAMPS IN AREAS ZONED CITY CENTER OR WHERE THE HERITAGE SIDEWALK IS CONSTRUCTED ARE REQUIRED TO BE CONSTRUCTED WITH BRICK UNIT PAVERS, SEE **BRICK UNIT PAVER PATTERN T02–16** FOR BRICK LAYOUTS.

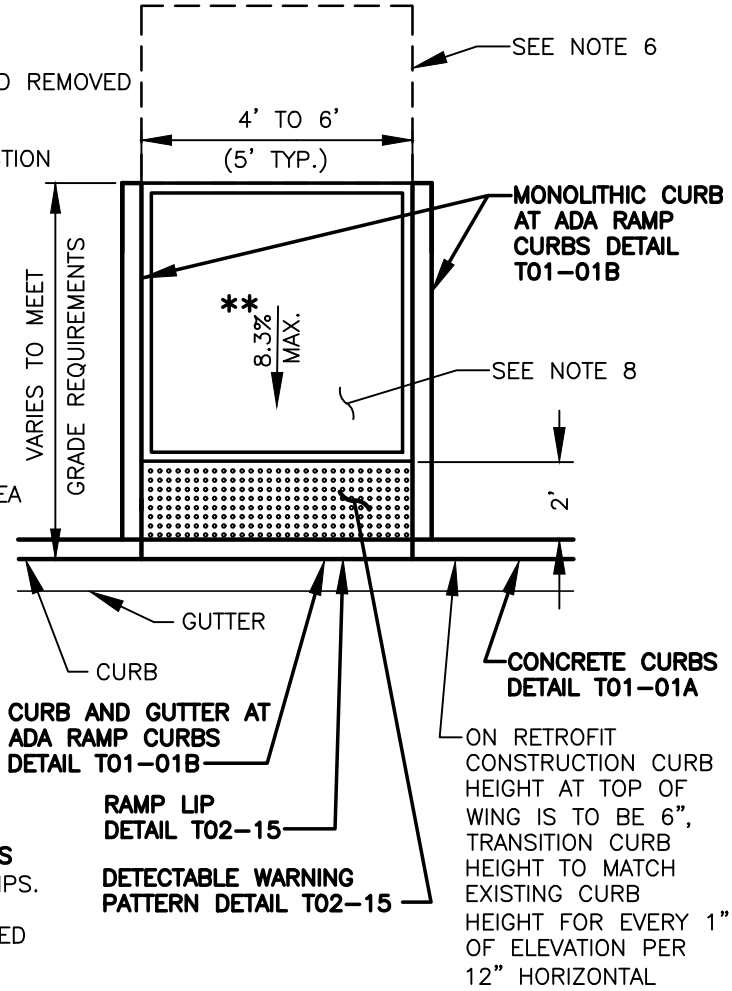

* 1.5% OR FLATTER RECOMMENDED FOR DESIGN/FORMWORK (2% MAX.)

** 7.5% OR FLATTER RECOMMENDED FOR DESIGN/FORMWORK (8.3% MAX.)

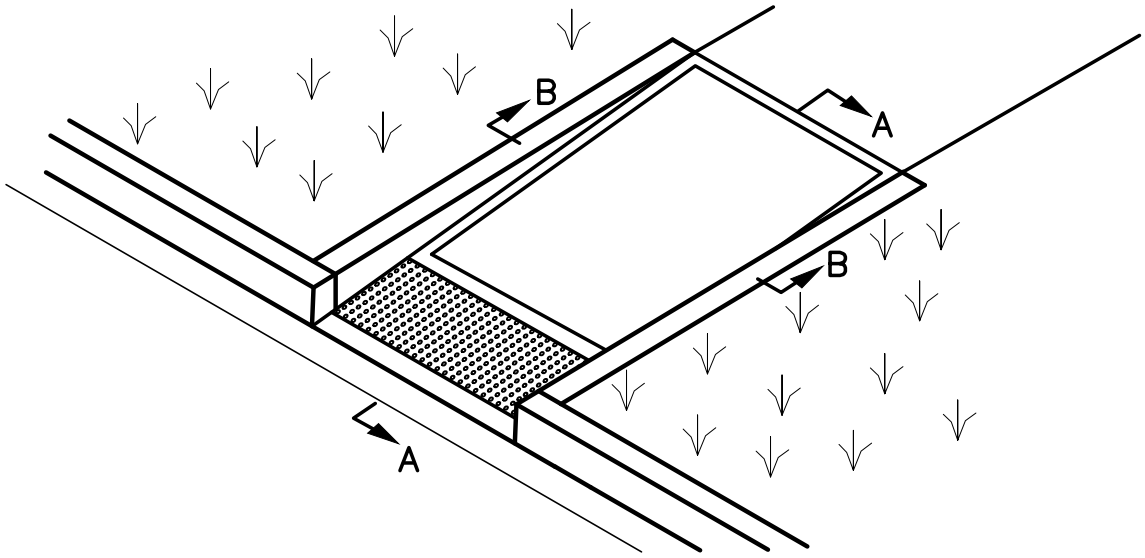

REV NO.	DATE	BY	APPR
1	8/08	RAW	MHA
2	7/14	RAW	MHA
3	3/16	RAW	MHA
4	3/17	RAW	MHA
5	4/18	RAW	MHA
6	9/21	RAW	MHA

PUBLIC WORKS – STREETS AND TRANSPORTATION

APPROVED BY: M H Ledalla
ENGINEER MANAGER

APPROVED DATE: 9/1/2021

CITY OF Vancouver WASHINGTON

PERPENDICULAR RAMP CONSTRUCTION

STANDARD PLAN NUMBER

T02–08

I:\CITYAPPS\AUTOCAD\STD_DETAILS\DRAWING_FILES\T02–08

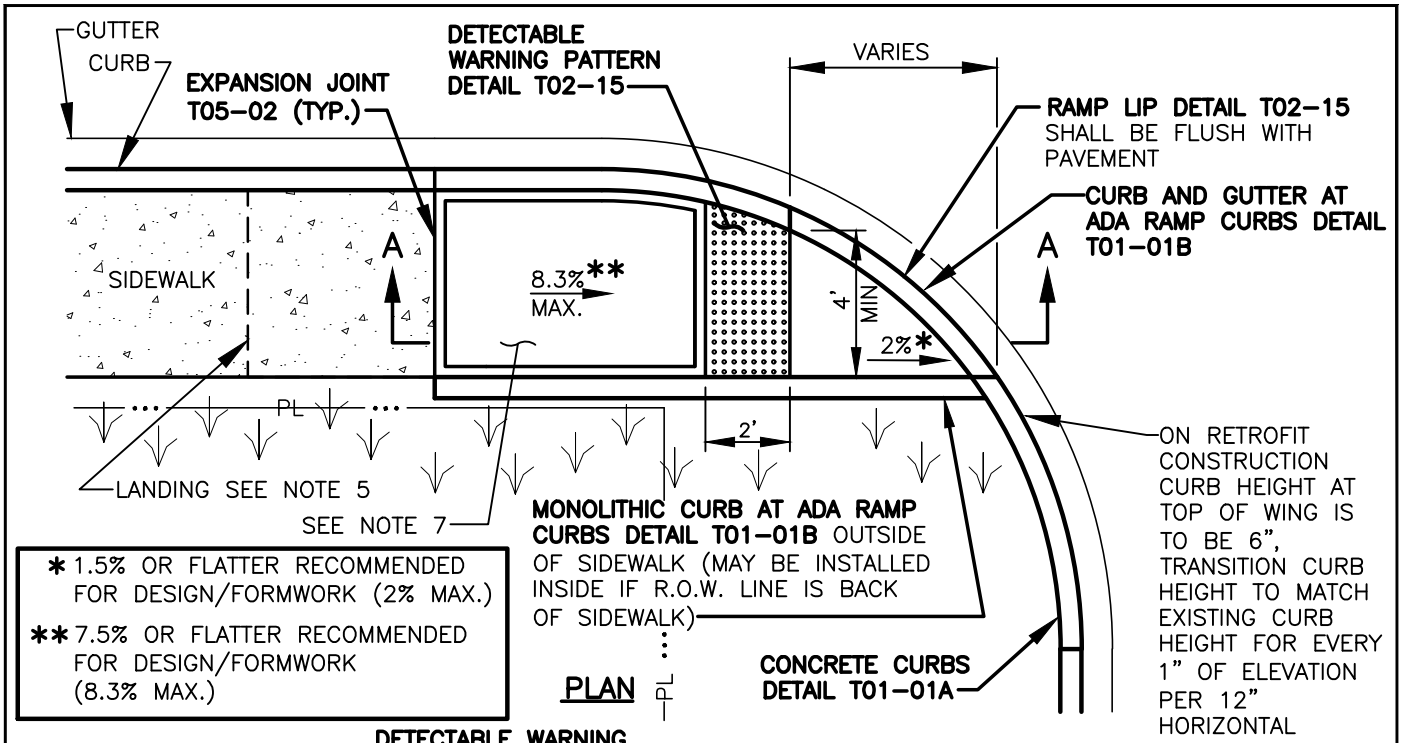

* 1.5% OR FLATTER RECOMMENDED FOR DESIGN/FORMWORK (2% MAX.)

** 7.5% OR FLATTER RECOMMENDED FOR DESIGN/FORMWORK (8.3% MAX.)

PLAN

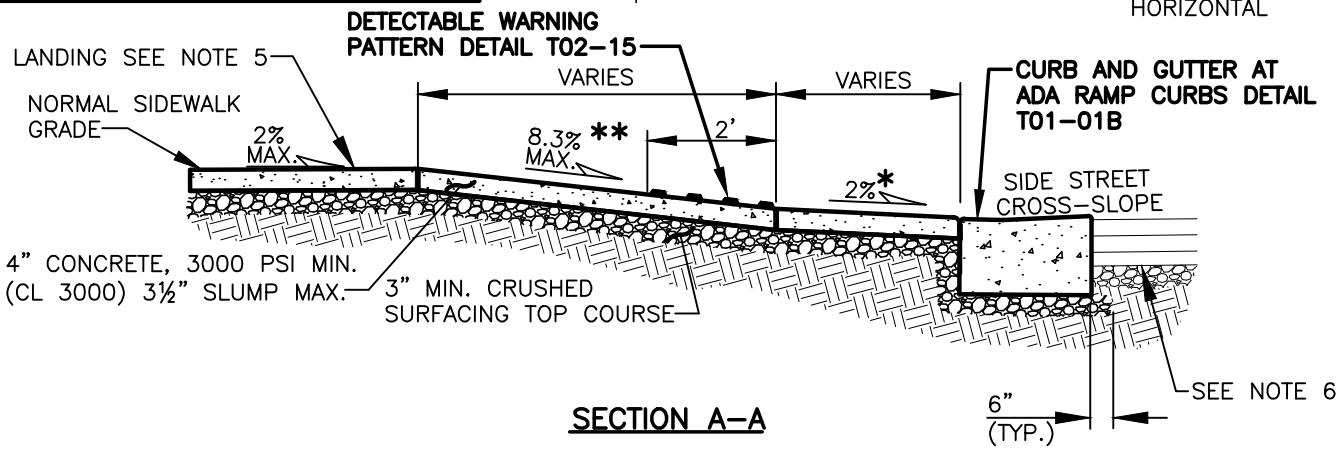

SECTION A–A

NOTES:

1. AN UNOBSTRUCTED PATH OF TRAVEL WITH A MINIMUM WIDTH OF 4' SHALL BE MAINTAINED.
2. COMPACT SUBGRADE AND CRUSHED SURFACING TOP COURSE TO 95% OF MAXIMUM DRY DENSITY (3" MIN. DEPTH).
3. IF THE AREA BEHIND THE SIDEWALK IS VEGETATED THE BACK CURB MAY BE REPLACED WITH A SLOPE NO STEEPER THAN 4:1.
4. IF THE MAXIMUM SLOPE OF 8.3%** CANNOT BE ACHIEVED DUE TO THE SLOPE OF THE EXISTING SIDEWALK, THE LENGTH OF THE CURB RAMP SHALL NOT BE REQUIRED TO BE LONGER THAN 15 FEET REGARDLESS OF THE RESULTING RAMP SLOPE.
6. AT THE TOP OF EACH RAMP A 5'X5' LANDING AREA SHALL BE CONSTRUCTED AND THE LONGITUDINAL CROSS SLOPE SHALL NOT EXCEED 2%* EACH DIRECTION.
7. SEE **PAVEMENT RESTORATION/WIDENING AT CURB DETAIL T05–01A** WHEN CUTTING EXISTING CURB.
8. RAMP CROSS SLOPE SHALL BE 2%* MAXIMUM.
9. TYPE A–1 AND E–1 CURB (SEE **CONCRETE CURB DETAIL T01–01A**) POURED SEPARATELY FROM RAMPS.
10. **ADA RAMP** AND **GRADE CORRECTION CURBS** POURED MONOLITHICALLY.

REV NO.	DATE	BY	APPR
1	3/17	RAW	MHA
2	4/18	RAW	MHA
3	9/21	RAW	MHA

PUBLIC WORKS – STREETS AND TRANSPORTATION

APPROVED BY: M H Abdalla
ENGINEER MANAGER
APPROVED DATE: 9/1/2021

CITY OF Vancouver WASHINGTON

SINGLE DIRECTIONAL CURB RAMP ATTACHED SIDEWALK

STANDARD PLAN NUMBER T02–09A

I:\CITYAPPS\AUTOCAD\STD_DETAILS\DRAWING_FILES\T02–09A

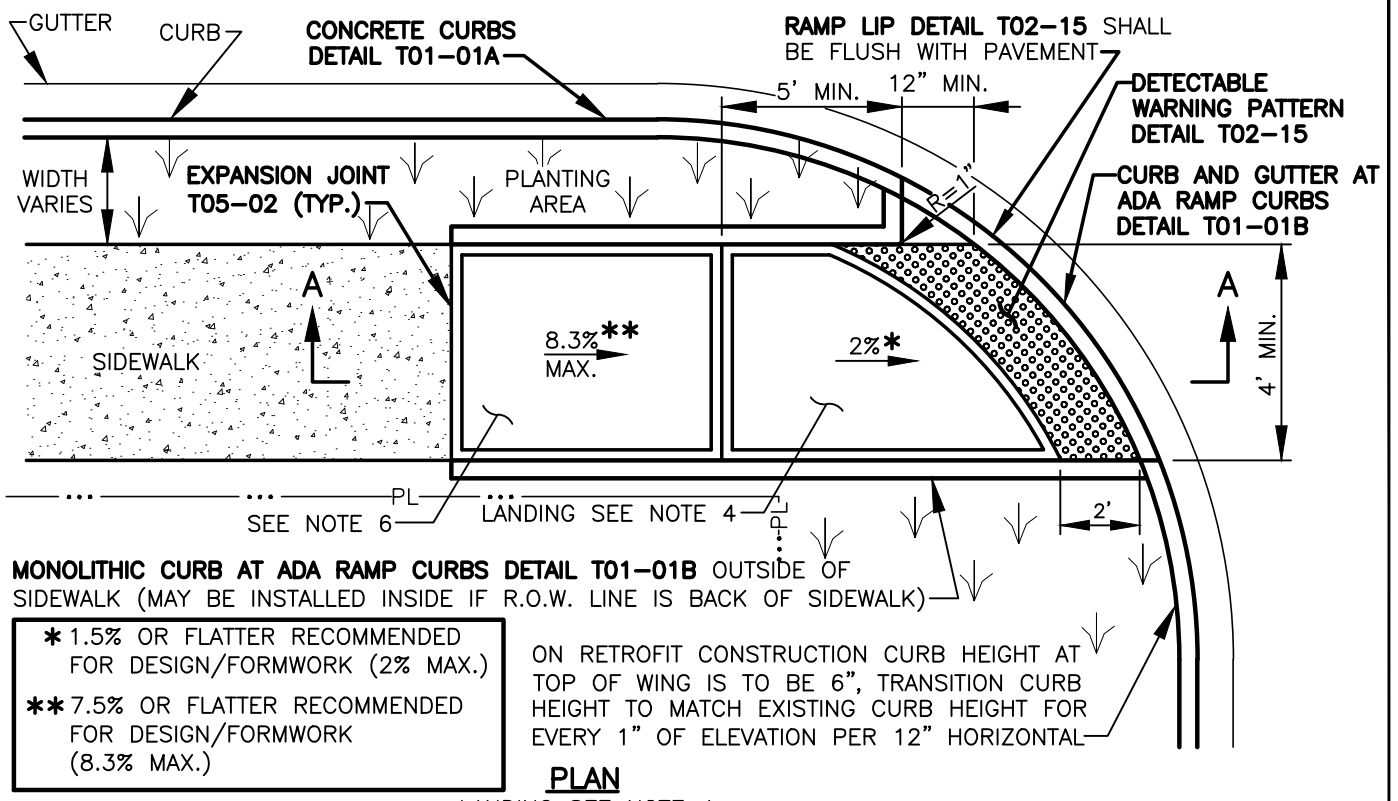

PLAN

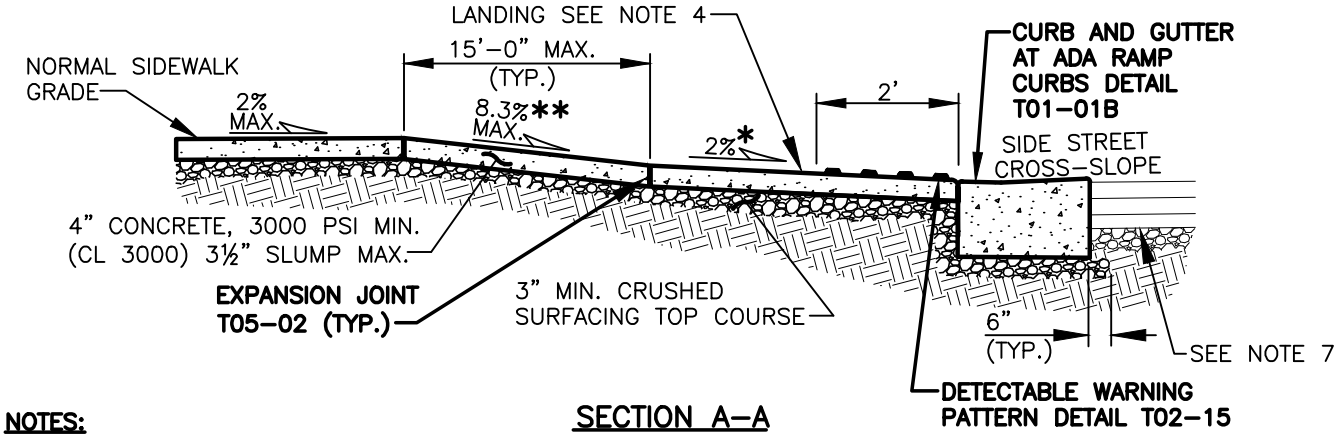

SECTION A–A

NOTES:

1. AN UNOBSTRUCTED PATH OF TRAVEL WITH A MINIMUM WIDTH OF 4' SHALL BE MAINTAINED.
2. COMPACT SUBGRADE AND CRUSHED SURFACING TOP COURSE TO 95% OF MAXIMUM DRY DENSITY (3" MIN. DEPTH).
3. IF THE AREA BEHIND THE SIDEWALK IS VEGETATED THE BACK CURB MAY BE REPLACED WITH A SLOPE NO STEEPER THAN 4:1.
4. IF THE MAXIMUM SLOPE OF 8.3%** CANNOT BE ACHIEVED DUE TO THE SLOPE OF THE EXISTING SIDEWALK, THE LENGTH OF THE CURB RAMP SHALL NOT BE REQUIRED TO BE LONGER THAN 15 FEET REGARDLESS OF THE RESULTING RAMP SLOPE.
5. AT THE TOP OF EACH RAMP A 5'X5' LANDING AREA SHALL BE CONSTRUCTED AND THE LONGITUDINAL CROSS SLOPE SHALL NOT EXCEED 2%* EACH DIRECTION.
6. SEE **PAVEMENT RESTORATION/WIDENING AT CURB DETAIL T05–01A** WHEN CUTTING EXISTING CURB.
7. RAMP CROSS SLOPE SHALL BE 2%* MAXIMUM.
8. TYPE A–1 AND E–1 CURB (SEE **CONCRETE CURB DETAIL T01–01A**) POURED SEPARATELY FROM RAMPS.
9. **ADA RAMP** AND **GRADE CORRECTION CURBS** POURED MONOLITHICALLY.

REV NO.	DATE	BY	APPR
1	3/17	RAW	MHA
2	4/18	RAW	MHA
3	9/21	RAW	MHA

PUBLIC WORKS – STREETS AND TRANSPORTATION

APPROVED BY: M H Abdalla
ENGINEER MANAGER
APPROVED DATE: 9/1/2021

CITY OF Vancouver WASHINGTON

SINGLE DIRECTIONAL CURB RAMP DETTACHED SIDEWALK

STANDARD PLAN NUMBER T02–09B

I:\CITYAPPS\AUTOCAD\STD_DETAILS\DRAWING_FILES\T02–09B

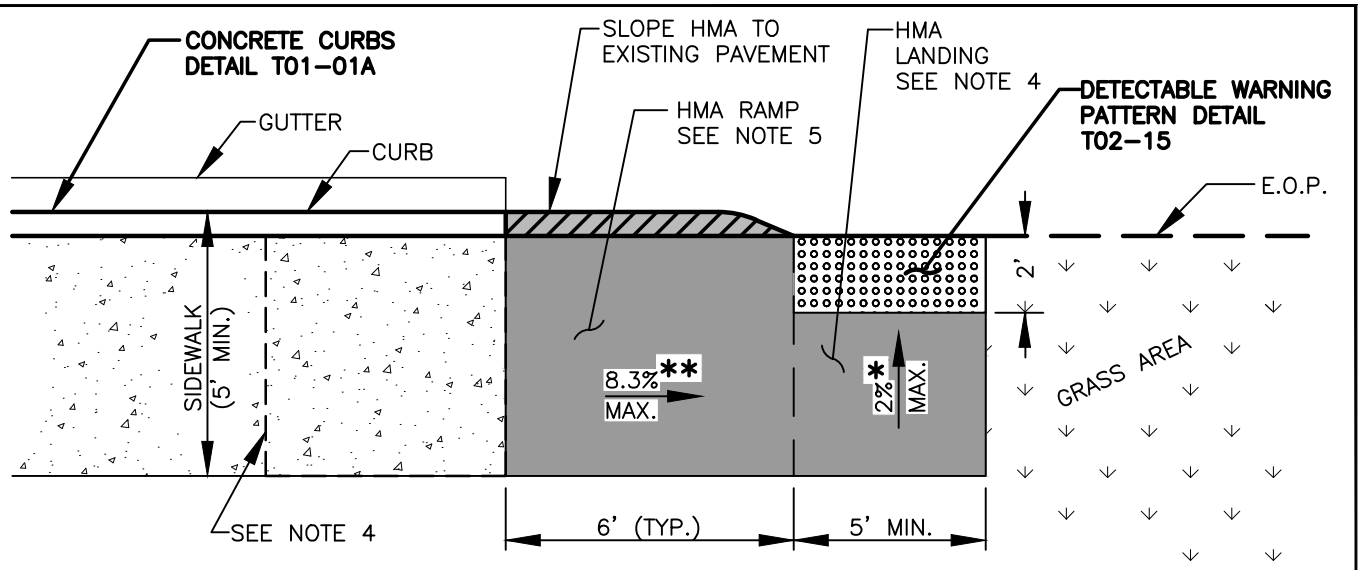

ATTACHED SIDEWALK

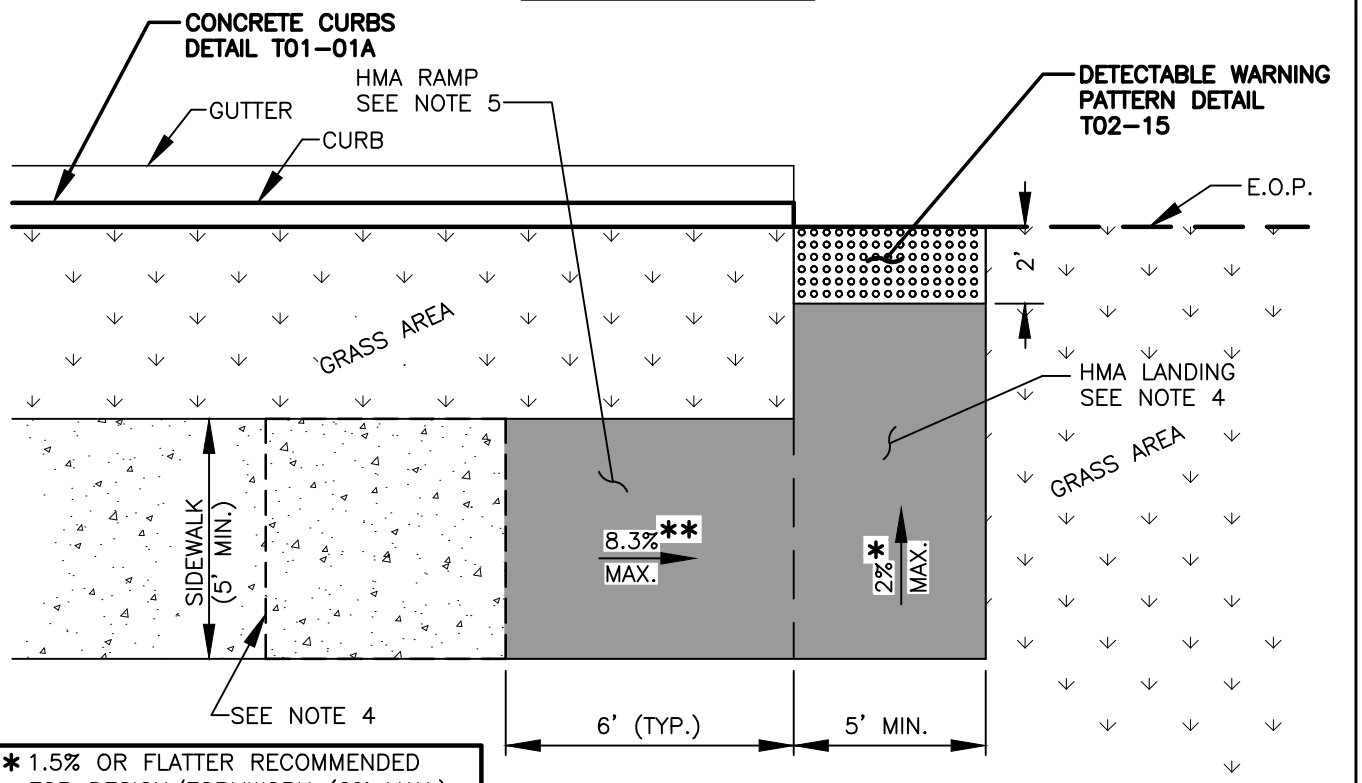

DETACHED SIDEWALK

* 1.5% OR FLATTER RECOMMENDED FOR DESIGN/FORMWORK (2% MAX.)

** 7.5% OR FLATTER RECOMMENDED FOR DESIGN/FORMWORK (8.3% MAX.)

NOTES:

1. CLASS "G" HOT MIX ASPHALT (HMA) SHALL BE A MINIMUM OF 0.20' DEEP, OVER 3" MIN. DEPTH OF CRUSHED SURFACING TOP COURSE.
2. HMA LANDINGS SHALL BE AT A SLOPE NO GREATER THAN 2%*.
3. BEGIN HMA RAMP AT NEAREST SIDEWALK JOINT.
4. 5'x5' LANDING AREA SHALL BE CONSTRUCTED AND THE LONGITUDINAL AND THE CROSS SLOPE SHALL NOT EXCEED 2%* EACH DIRECTION.
5. RAMP CROSS SLOPE SHALL BE 2%* MAXIMUM.

REV NO.	DATE	BY	APPR
1	2/07	RAW	MHA
2	8/08	RAW	MHA
3	7/17	RAW	MHA
4	3/17	RAW	MHA
5	4/18	RAW	MHA
6	9/21	RAW	MHA

PUBLIC WORKS – STREETS AND TRANSPORTATION

APPROVED BY: M H Ledalla
ENGINEER MANAGER

APPROVED DATE: 9/1/2021

CITY OF Vancouver WASHINGTON

TEMPORARY HMA RAMP

STANDARD PLAN NUMBER

T02–10

I:\CITYAPPS\AUTOCAD\STD_DETAILS\DRAWING_FILES\T02-10

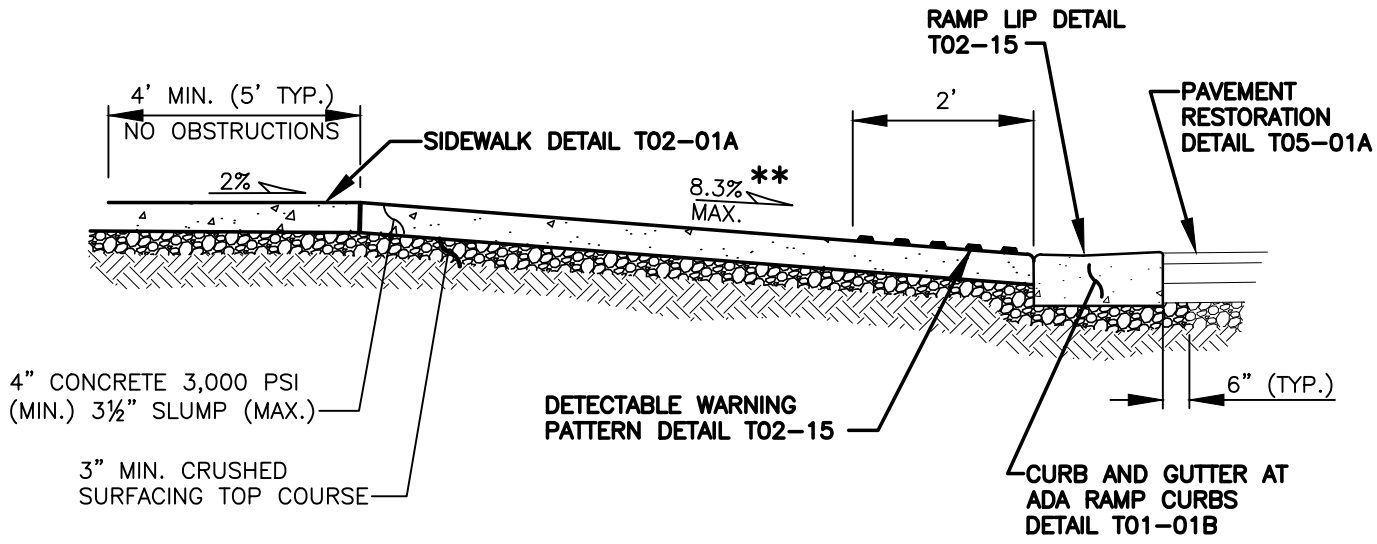

SECTION A–A

FOR DETAILS T02–04B AND T02–08

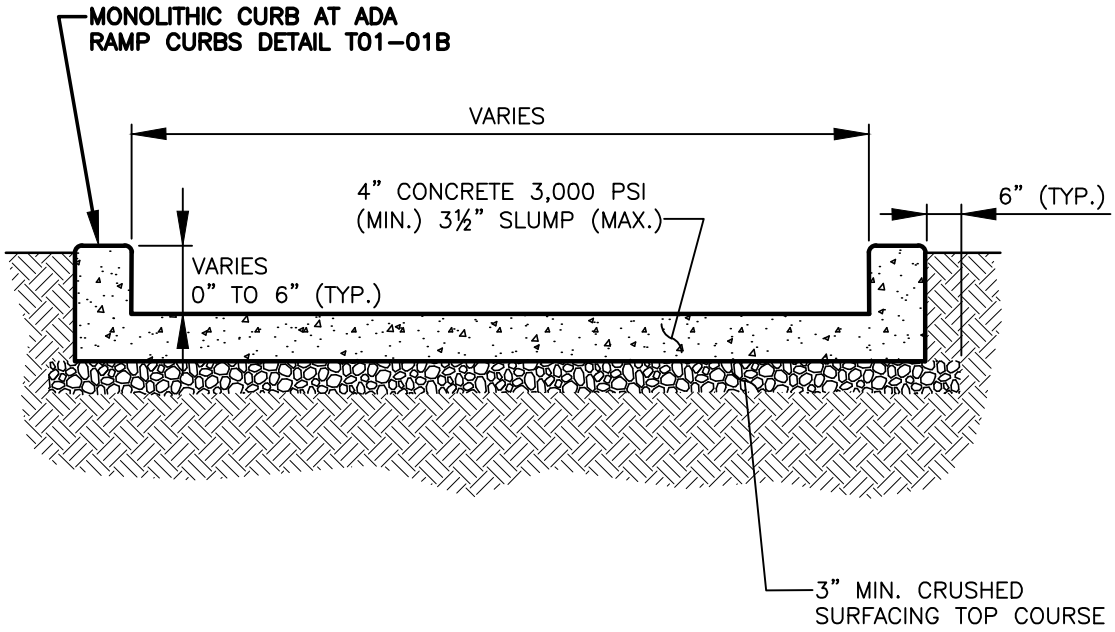

SECTION B–B

FOR DETAIL T02–08

NOTES:

1. TYPE A–1 AND E–1 CURB (SEE **CONCRETE CURBS DETAIL T01–01A**) POURED SEPARATELY FROM RAMPS.
2. **ADA RAMP** AND **GRADE CORRECTION CURBS** POURED MONOLITHICALLY.
3. COMPACT SUBGRADE AND CRUSHED SURFACING TOP COURSE TO 95% OF MAXIMUM DRY DENSITY (3" MIN. DEPTH).

** 7.5% OR FLATTER RECOMMENDED FOR DESIGN/FORMWORK (8.3% MAX.)

REV NO.	DATE	BY	APPR
1	2/07	RAW	MHA
2	8/08	RAW	MHA
3	7/14	RAW	MHA
4	3/17	RAW	MHA
5	4/18	RAW	MHA
6	9/21	RAW	MHA

PUBLIC WORKS – STREETS AND TRANSPORTATION

APPROVED BY: M H Abdalla
ENGINEER MANAGER

APPROVED DATE: 9/1/2021

CITY OF Vancouver WASHINGTON

STANDARD LANDING CROSS SECTIONS A–A AND B–B

STANDARD PLAN NUMBER

T02–11

I:\CITYAPPS\AUTOCAD\STD_DETAILS\DRAWING_FILES\T02–11

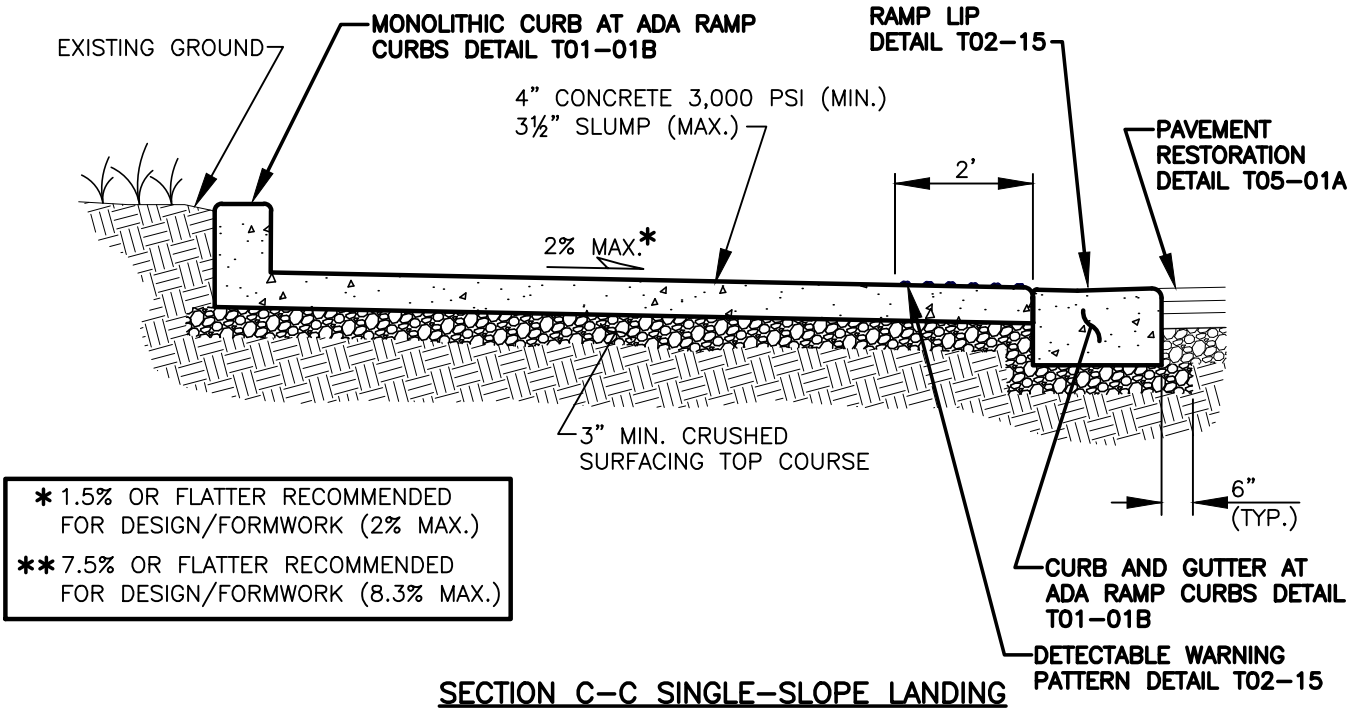

* 1.5% OR FLATTER RECOMMENDED FOR DESIGN/FORMWORK (2% MAX.)

** 7.5% OR FLATTER RECOMMENDED FOR DESIGN/FORMWORK (8.3% MAX.)

SECTION C–C SINGLE–SLOPE LANDING

FOR DETAIL T02–07B

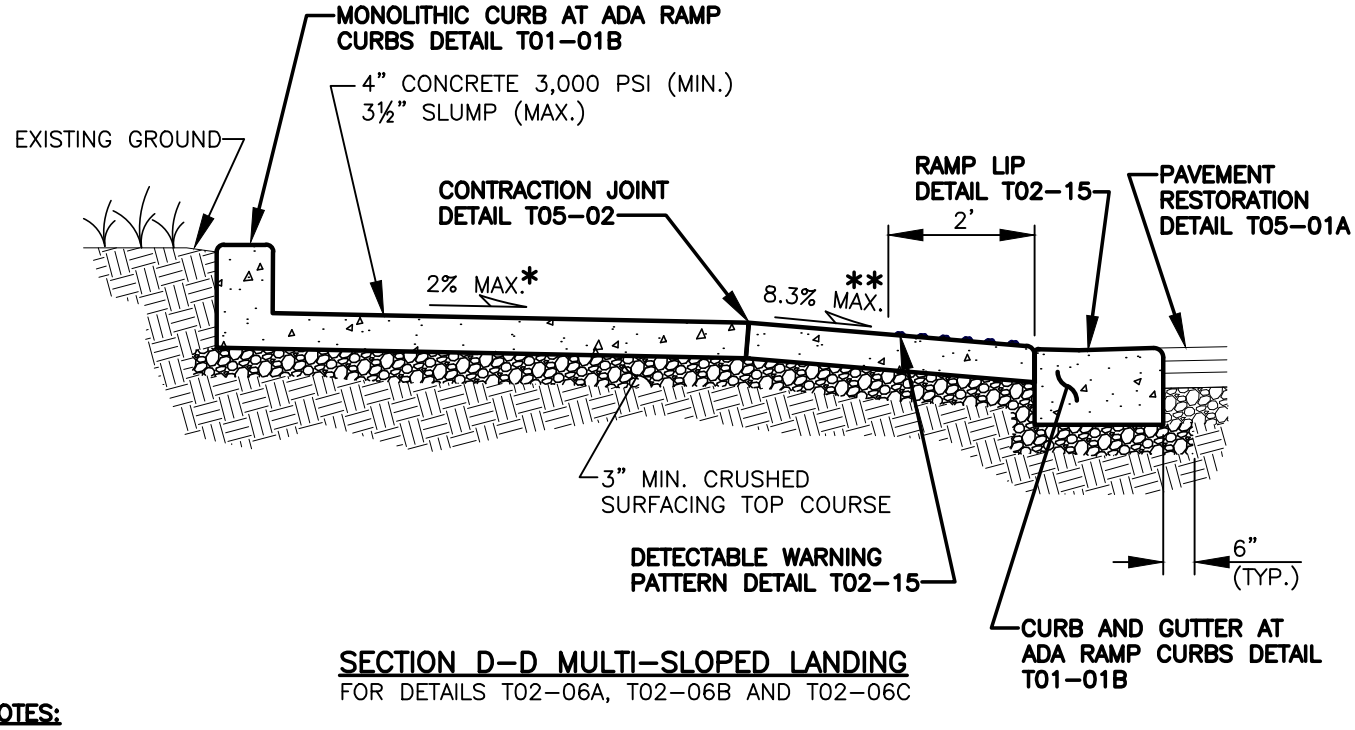

SECTION D–D MULTI–SLOPED LANDING

FOR DETAILS T02–06A, T02–06B AND T02–06C

NOTES:

1. IF THE AREA BEHIND THE SIDEWALK IS VEGETATED, THE BACK CURB MAY BE REPLACED WITH A SLOPE NO STEEPER THAN 4:1.
2. COMPACT SUBGRADE AND CRUSHED SURFACING TOP COURSE TO 95% OF MAXIMUM DRY DENSITY (3" MIN. DEPTH).
3. A WALL MAY BE USED IN LIEU OF CURB TO MAINTAIN 2%* MAX. SLOPE.
4. CURB OR WALL MAY BE INSTALLED INSIDE OF SIDEWALK IF R.O.W. LINE IS AT BACK OF SIDEWALK.
5. TYPE A–1 AND E–1 CURB (SEE **CONCRETE CURBS DETAIL T01–01A**) POURED SEPARATELY FROM RAMPS.
6. **ADA RAMP** AND **GRADE CORRECTION CURBS** POURED MONOLITHICALLY.

REV NO.	DATE	BY	APPR
1	2/07	RAW	MHA
2	8/08	RAW	MHA
3	7/14	RAW	MHA
4	3/17	RAW	MHA
5	4/18	RAW	MHA
6	9/21	RAW	MHA

PUBLIC WORKS – STREETS AND TRANSPORTATION

APPROVED BY: M H Abdalla
ENGINEER MANAGER

APPROVED DATE: 9/1/2021

CITY OF Vancouver WASHINGTON

STANDARD LANDING CROSS SECTIONS C–C AND D–D

STANDARD PLAN NUMBER T02–13

I:\CITYAPPS\AUTOCAD\STD_DETAILS\DRAWING_FILES\T02–13

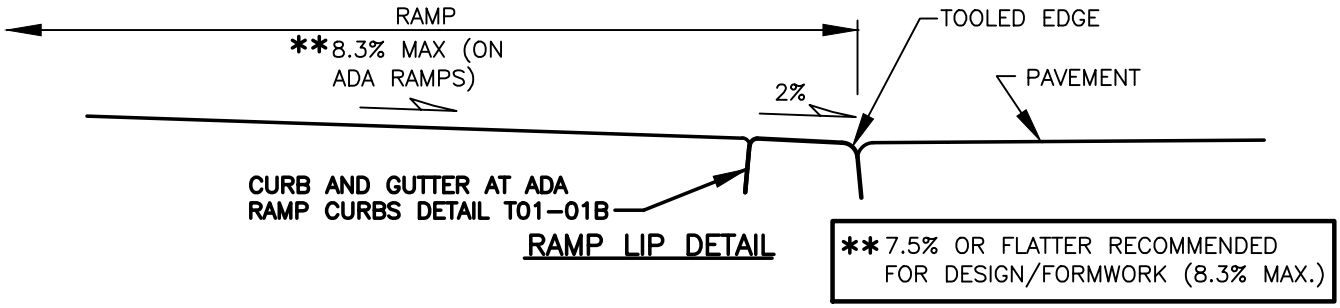

RAMP LIP DETAIL

**7.5% OR FLATTER RECOMMENDED FOR DESIGN/FORMWORK (8.3% MAX.)

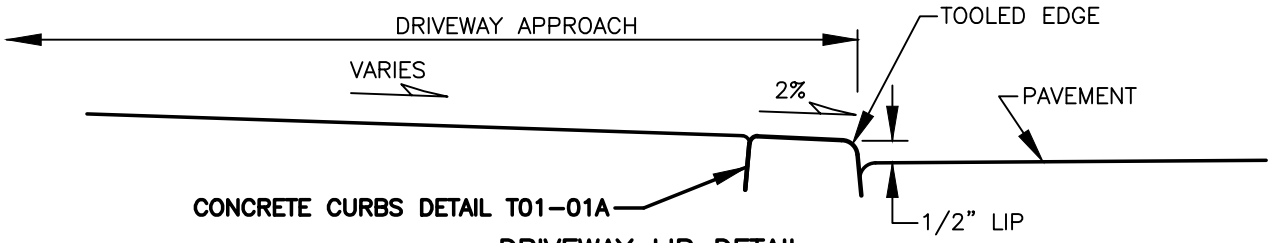

DRIVEWAY LIP DETAIL

TRUNCATED DOMES COLOR SCHEME

LOCATION	COLORS
ALL BRICK RAMPS	WHITE
STREETS WITH A MAJORITY OF RESIDENTIAL FRONTAGE	BRICK RED
NON-RESIDENTIAL ARTERIAL STREETS	SAFETY YELLOW

	MIN.	MAX.
A	1 5/8"	2 3/8"
B	2/3"	1 1/2"
C	7/16"	3/4"
D	7/8"	1 7/16"

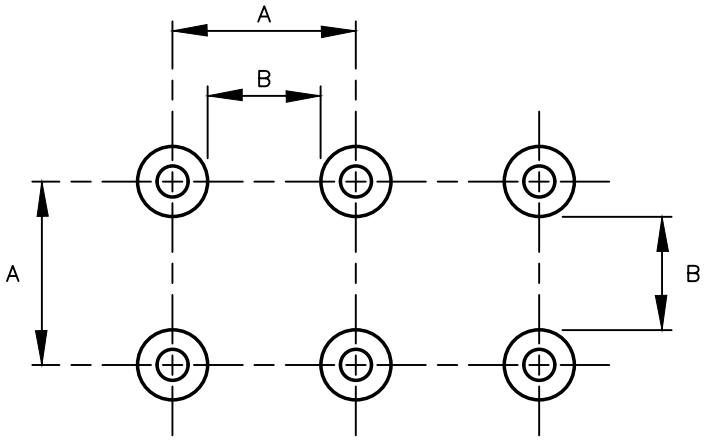

PLAN

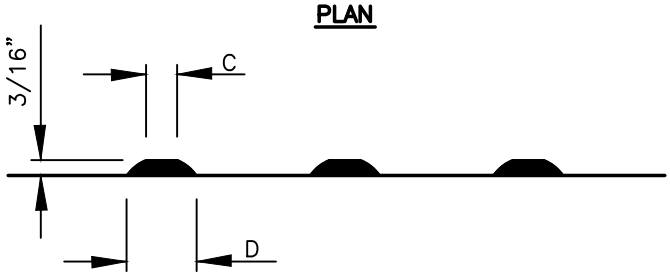

ELEVATION

NOTES:

1. MANUFACTURERS SHALL MEET THE REQUIREMENTS LISTED UNDER THE CONTRACT SPECIAL PROVISIONS AND MUST BE ON THE CITY OF VANCOUVER'S APPROVED PRODUCT LIST. THE PRODUCT LIST IS TAKEN FROM WSDOT PRODUCT LIST, THAT IS UPDATED PERIODICALLY.
2. DETECTABLE WARNINGS SHALL BE MANUFACTURED USING THE MATERIALS SPECIFIED ON THE PLAN SHEETS WITH THE DOME DIMENSIONS AND SPACING SHOWN AND INSTALLED PER THE MANUFACTURER'S RECOMMENDED PROCEDURES.
3. DETECTABLE WARNINGS SHALL BE INSET INTO NEW CONCRETE. GLUED ON OR NAILED DOWN PRODUCTS ARE NOT ACCEPTABLE FOR NEW CONSTRUCTION.
4. ANY VARIATION FROM THE CITY DETECTABLE WARNING POLICY REQUIRES APPROVAL FROM THE DIRECTOR.
5. SAFETY YELLOW TRUNCATED DOMES ARE RECOMMENDED IN SCHOOL ZONES AND ALONG SCHOOL ROUTES.

DETECTABLE WARNING PATTERN DETAIL

REV NO.	DATE	BY	APPR
1	2/07	RAW	MHA
2	8/08	RAW	MHA
3	7/14	RAW	MHA
4	3/16	RAW	MHA
5	3/17	RAW	MHA
6	9/21	RAW	MHA

PUBLIC WORKS – STREETS AND TRANSPORTATION

APPROVED BY: M H Abdalla
ENGINEER MANAGER
APPROVED DATE: 9/1/2021

CITY OF Vancouver WASHINGTON

RAMP LIP, DRIVEWAY LIP AND DETECTABLE WARNING PATTERN

STANDARD PLAN NUMBER
T02-15

I:\CITYAPPS\AUTOCAD\STD_DETAILS\DRAWING_FILES\T02-15

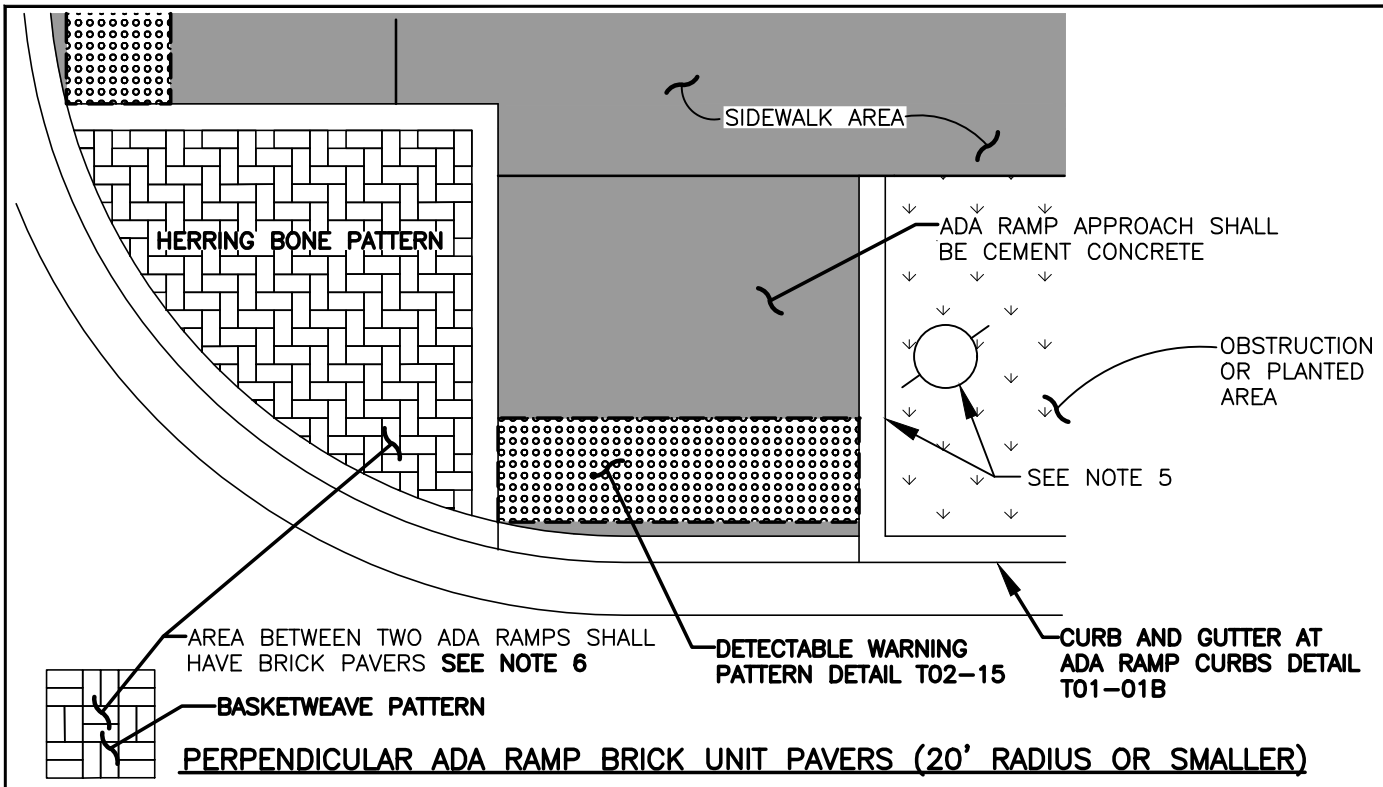

PERPENDICULAR ADA RAMP BRICK UNIT PAVERS (20' RADIUS OR SMALLER)

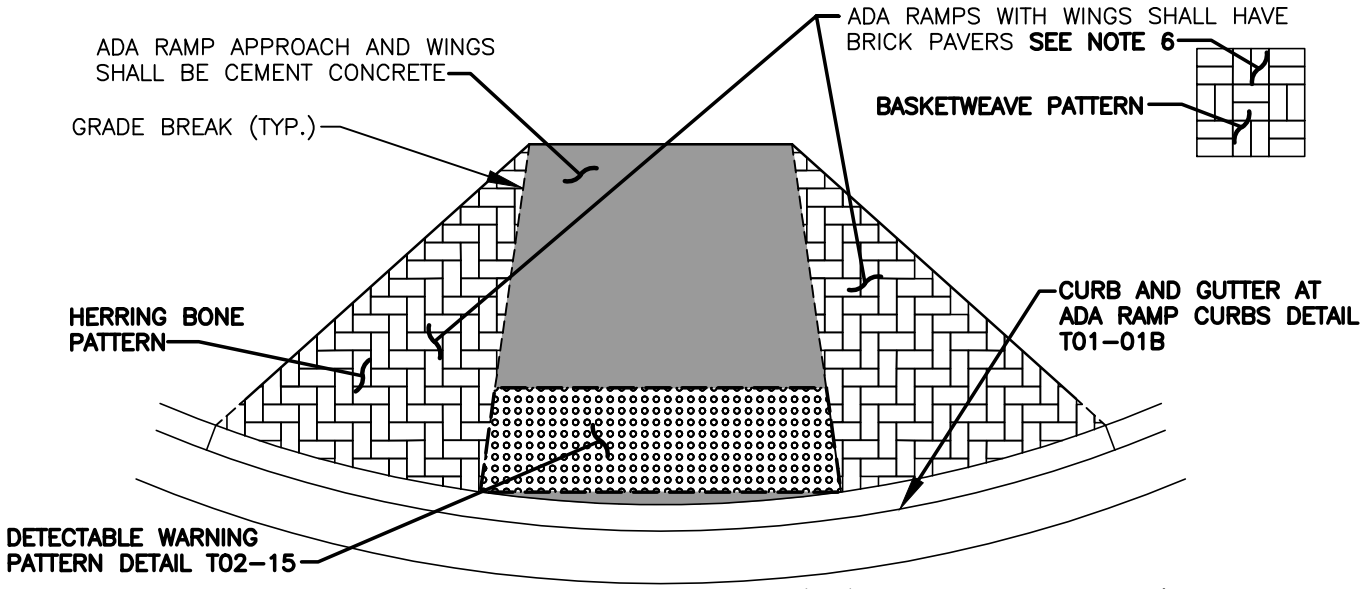

WINGED ADA RAMP BRICK UNIT PAVERS (25' RADIUS OR LARGER)

NOTES:

1. SAMPLE OF BRICK AND MORTAR COLOR SHALL BE APPROVED BY THE CITY ENGINEER PRIOR TO CONSTRUCTION. BRICK MANUFACTURED BY MUTUAL MATERIALS, "BURGUNDY–MICA TILE" OR ENDICOTT "MEDIUM IRONSPOT #46", PREMIXED MORTAR ASTM C270, TYPE S, 1800 PSI 28 DAY STRENGTH OR APPROVED EQUAL.
2. THE BRICK PATTERN IS REQUIRED FOR ALL RAMPS IN AREAS ZONED CITY CENTER OR WHERE THE HERITAGE SIDEWALK IS CONSTRUCTED.
3. SURFACE JOINT NOT REQUIRED WHEN USING BRICK PAVERS. TRANSITION TO FIT BETWEEN GRADES.
4. THE DETECTABLE WARNING PATTERN (TRUNCATED DOMES) SHALL BE WHITE ON THE BRICK UNIT PAVER PATTERN.
5. RAMP WINGS MAY BE REPLACED WITH A MONOLITHIC CURB **ADA CURB RAMPS DETAIL T01–01B** IF OBSTRUCTION OR PLANTER PREVENTS PEDESTRIAN TRAFFIC IN WING AREA.
6. RAMP WING BRICK PATTERN OPTIONS ARE EITHER HERRING BONE OR BASKET WEAVE PATTERNS.

REV NO.	DATE	BY	APPR
1	8/08	RAW	MHA
2	7/14	RAW	MHA
3	3/16	RAW	MHA
4	3/17	RAW	MHA
5	4/18	RAW	MHA
6	9/21	RAW	MHA

PUBLIC WORKS – STREETS AND TRANSPORTATION

APPROVED BY: M H Abdalla
ENGINEER MANAGER

APPROVED DATE: 9/1/2021

CITY OF Vancouver WASHINGTON

BRICK UNIT PAVER PATTERN

STANDARD PLAN NUMBER T02–16

I:\CITYAPPS\AUTOCAD\STD_DETAILS\DRAWING_FILES\T02–16

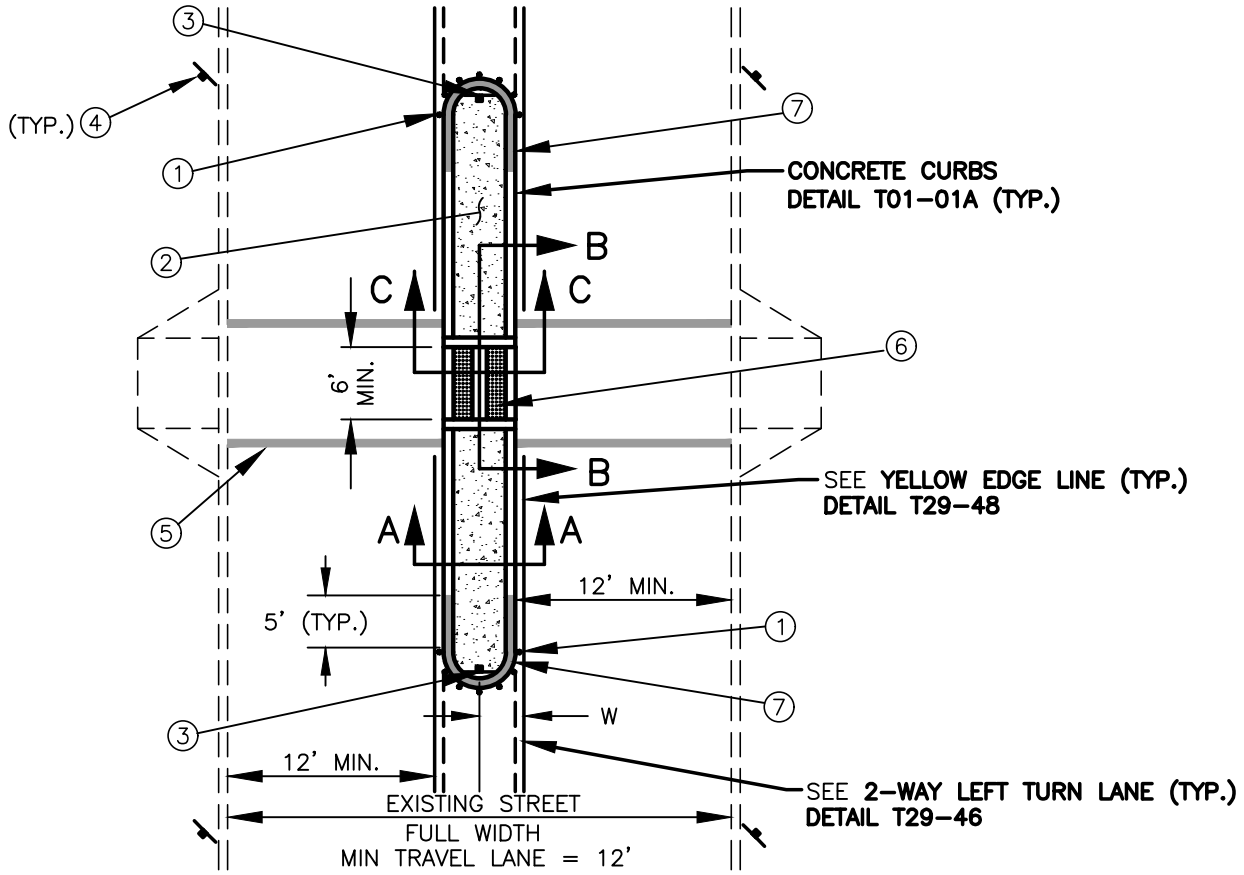

TYPE 1 PEDESTRIAN REFUGE – MID-BLOCK

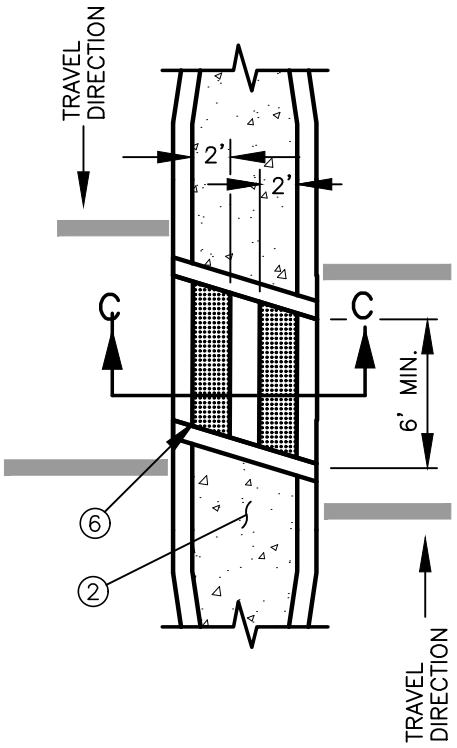

ANGLED CUT OUT MEDIAN ALTERNATIVE

SEE TYPICAL PEDESTRIAN REFUGE ISLAND SECTIONS ON COV STD. PLAN T02-17C.
SEE TYPICAL PEDESTRIAN REFUGE ISLAND NOTES ON COV STD. PLAN T02-17D.

REV NO.	DATE	BY	APPR
1	3/06	RAW	MHA
2	2/07	RAW	MHA
3	8/08	RAW	MHA
4	7/14	RAW	MHA
5	3/17	RAW	MHA
6	9/21	RAW	MHA

PUBLIC WORKS – STREETS AND TRANSPORTATION

APPROVED BY: M H Abdalla
ENGINEER MANAGER

APPROVED DATE: 9/1/2021

CITY OF Vancouver WASHINGTON

TYPE 1 PEDESTRIAN REFUGE ISLAND MID-BLOCK

STANDARD PLAN NUMBER

T02-17A

I:\CITYAPPS\AUTOCAD\STD_DETAILS\DRAWING_FILES\T02-17A

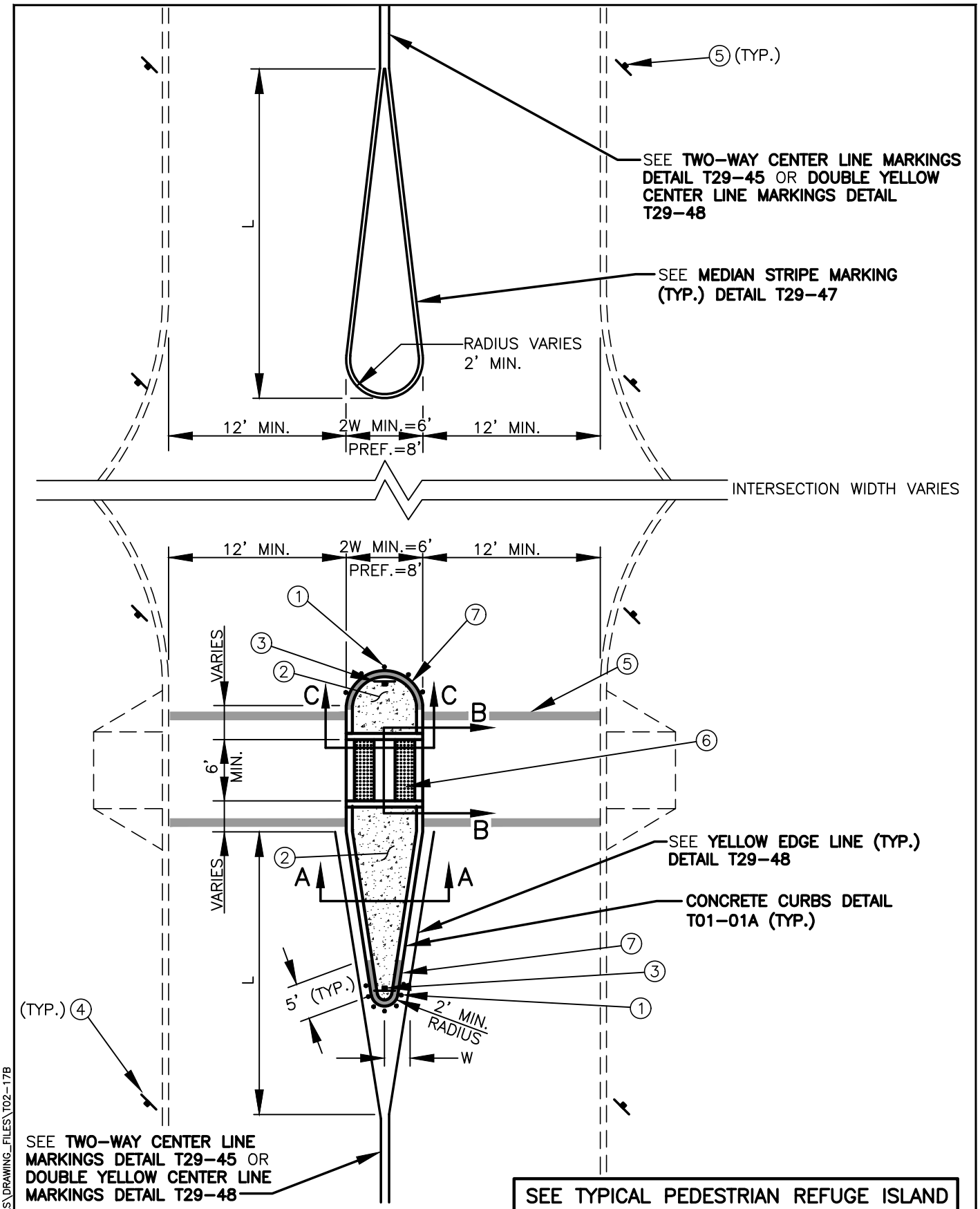

SEE TYPICAL PEDESTRIAN REFUGE ISLAND SECTIONS ON COV STD. PLAN T02-17C.
SEE TYPICAL PEDESTRIAN REFUGE ISLAND NOTES ON COV STD. PLAN T02-17D.

REV NO.	DATE	BY	APPR
1	3/06	RAW	MHA
2	2/07	RAW	MHA
3	8/08	RAW	MHA
4	7/14	RAW	MHA
5	3/17	RAW	MHA
6	9/21	RAW	MHA

PUBLIC WORKS – STREETS AND TRANSPORTATION

APPROVED BY: M H Abdalla
ENGINEER MANAGER

APPROVED DATE: 9/1/2021

CITY OF Vancouver WASHINGTON

TYPE 2 INTERSECTION PEDESTRIAN REFUGE ISLAND WITH NOSE

STANDARD PLAN NUMBER

T02-17B

I:\CITYAPPS\AUTOCAD\STD_DETAILS\DRAWING_FILES\T02-17B

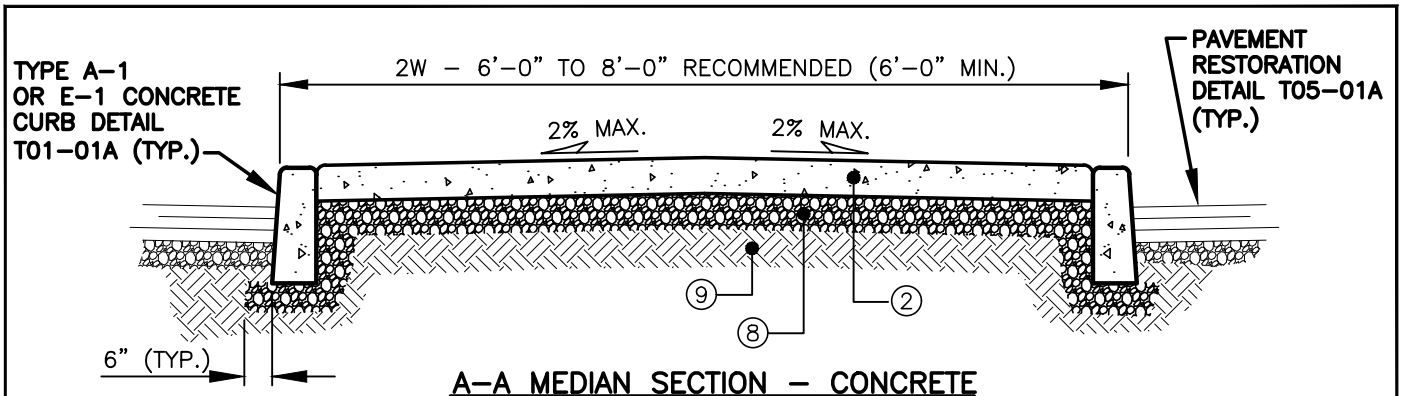

A–A MEDIAN SECTION – CONCRETE

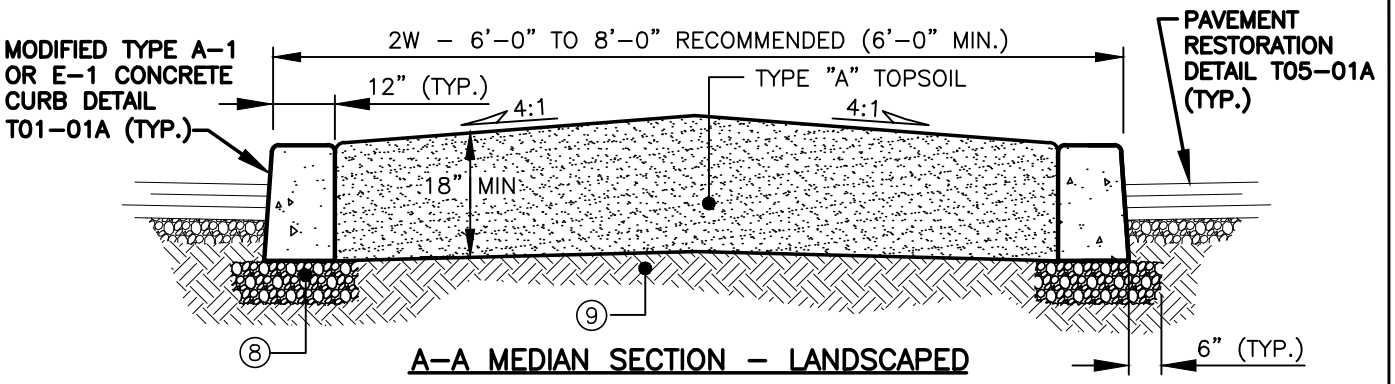

A–A MEDIAN SECTION – LANDSCAPED

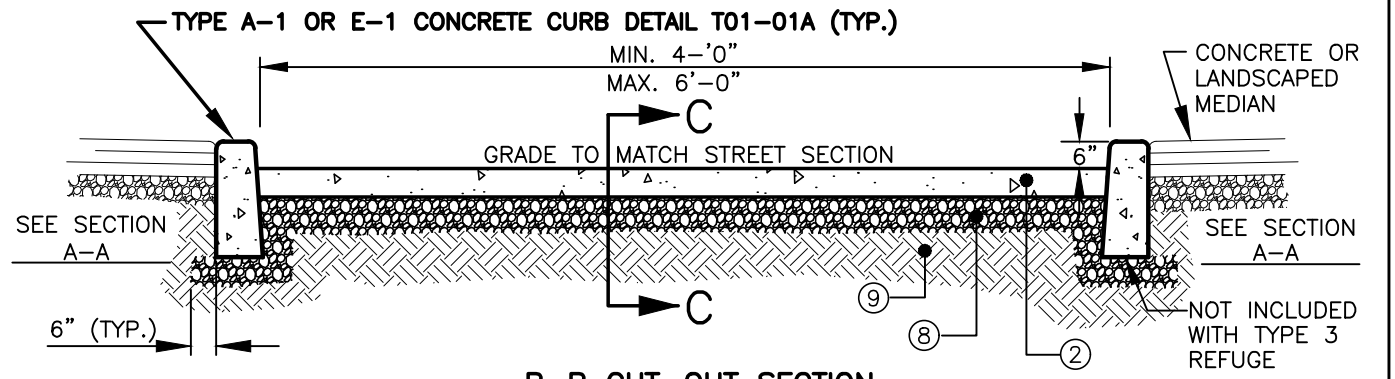

B–B CUT–OUT SECTION

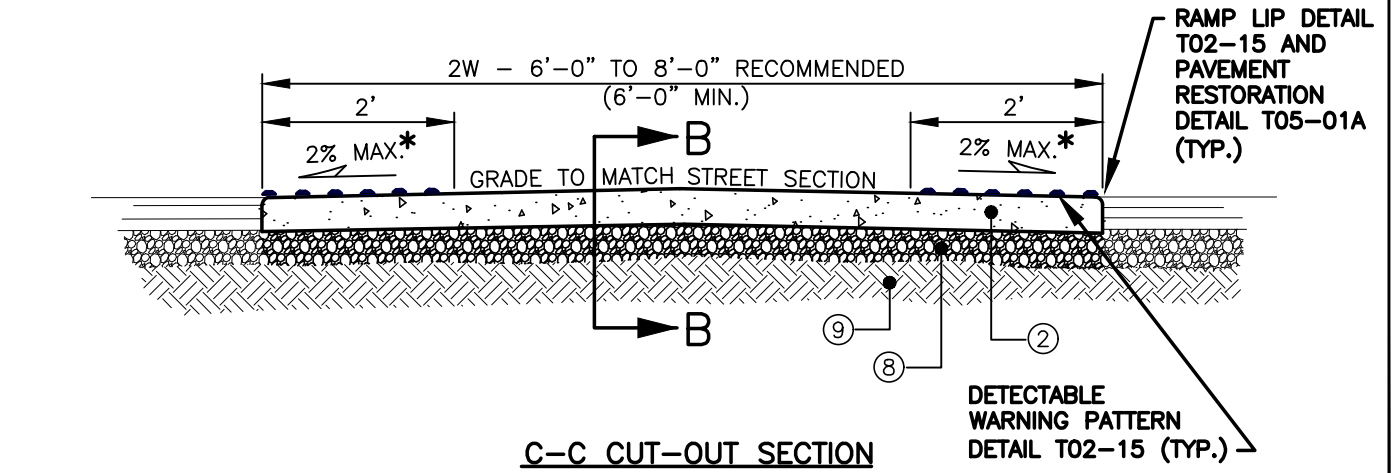

C–C CUT–OUT SECTION

SEE TYPICAL PEDESTRIAN REFUGE ISLAND NOTES ON COV STD. PLAN T02–17D.

REV NO.	DATE	BY	APPR
1	3/06	RAW	MHA
2	2/07	RAW	MHA
3	8/08	RAW	MHA
4	7/14	RAW	MHA
5	3/17	RAW	MHA
6	9/21	RAW	MHA

PUBLIC WORKS – STREETS AND TRANSPORTATION

APPROVED BY: M H Abdalla
ENGINEER MANAGER

APPROVED DATE: 9/1/2021

CITY OF Vancouver WASHINGTON

TYPICAL PEDESTRIAN REFUGE ISLAND SECTIONS

STANDARD PLAN NUMBER

T02–17C

I:\CITYAPPS\AUTOCAD\STD_DETAILS\DRAWING_FILES\T02-17C

GENERAL NOTES:

1. **FOR SPEEDS ≤ 40 MPH $L=WS^2/60$**
   L = TAPER LENGTH
   W = SHIFT DISTANCE
   S = SPEED (POSTED OR 85TH PERCENTILE WHICHEVER IS GREATER)

2. MIN SIZE OF RAISED REFUGE ISLAND = 150 S.F..

3. YELLOW PAINT STRIPING SHALL HAVE A TAPER LENGTH EQUIVALENT TO THE ABOVE FORMULA OR WSDOT REQUIREMENTS, WHICHEVER IS GREATER. PAINT STRIPE 8" AWAY FROM CURB (TYP.).

4. SEE CITY OF VANCOUVER **SIGN MOUNTING DETAIL T29–02 AND SIGN POST/ANCHOR INSTALLATION DETAIL T29–03**.

5. REFUGE ISLANDS SHALL BE ILLUMINATED.

CONSTRUCTION NOTES:

1. PLACE RAISED PAVEMENT MARKERS (TYPE 2) ON 1'–0" CENTERS AROUND LEADING RADIUS. SEE **DETAIL T29–20**.

2. MEDIAN SHALL BE CONCRETE (CL 3000) PAVEMENT. OTHER OPTIONS WITHIN THE MEDIAN ARE CONCRETE PAVEMENT WITH COLORING OR TEXTURE, PAVERS, OR LANDSCAPING WITH APPROVAL THE DIRECTOR. CONCRETE SCORING SHALL MATCH TEXTURE PATTERN. NO SIGHT OBSTRUCTIONS TALLER THAN 2' WITHOUT APPROVAL FROM THE DIRECTOR.

3. "STOP FOR PEDESTRIANS" (R1–6A) AND "KEEP RIGHT" (R4–7b) SIGNS AND SHALL BE PLACED PER MUTCD STANDARDS. BOTTOM OF SIGN AT 2'–0" FROM GROUND. SEE **DETAILS T29–03 AND T29–04** FOR PLACEMENT.

4. POST "NO PARKING ANYTIME" (R7–1a) SIGN FOR TRAVEL LANES LESS THAN 20' (TYP.). SEE **DETAILS T29–03 AND T29–04** FOR PLACEMENT.

5. USE 2–12" WIDE STRIPES UNLESS SCHOOL CROSSING; THEN USE LADDER STYLE CROSSWALK STRIPING. SEE **DETAILS ON T29–41.**

6. DETECTABLE WARNING AREA SHALL BE 2' IN WIDTH FROM THE TRAVELED EDGE OF ROADWAY (TYP.) SEE **DETECTABLE WARNING PATTERN DETAIL T02–15**.

7. PAINT CURB YELLOW AROUND LEADING RADIUS.

8. 3" MIN. DEPTH OF CRUSHED SURFACING TOP COURSE.

9. COMPACT SUBGRADE AND CRUSHED SURFACING TOP COURSE TO 95% OF MAXIMUM DRY DENSITY (3" MIN.).

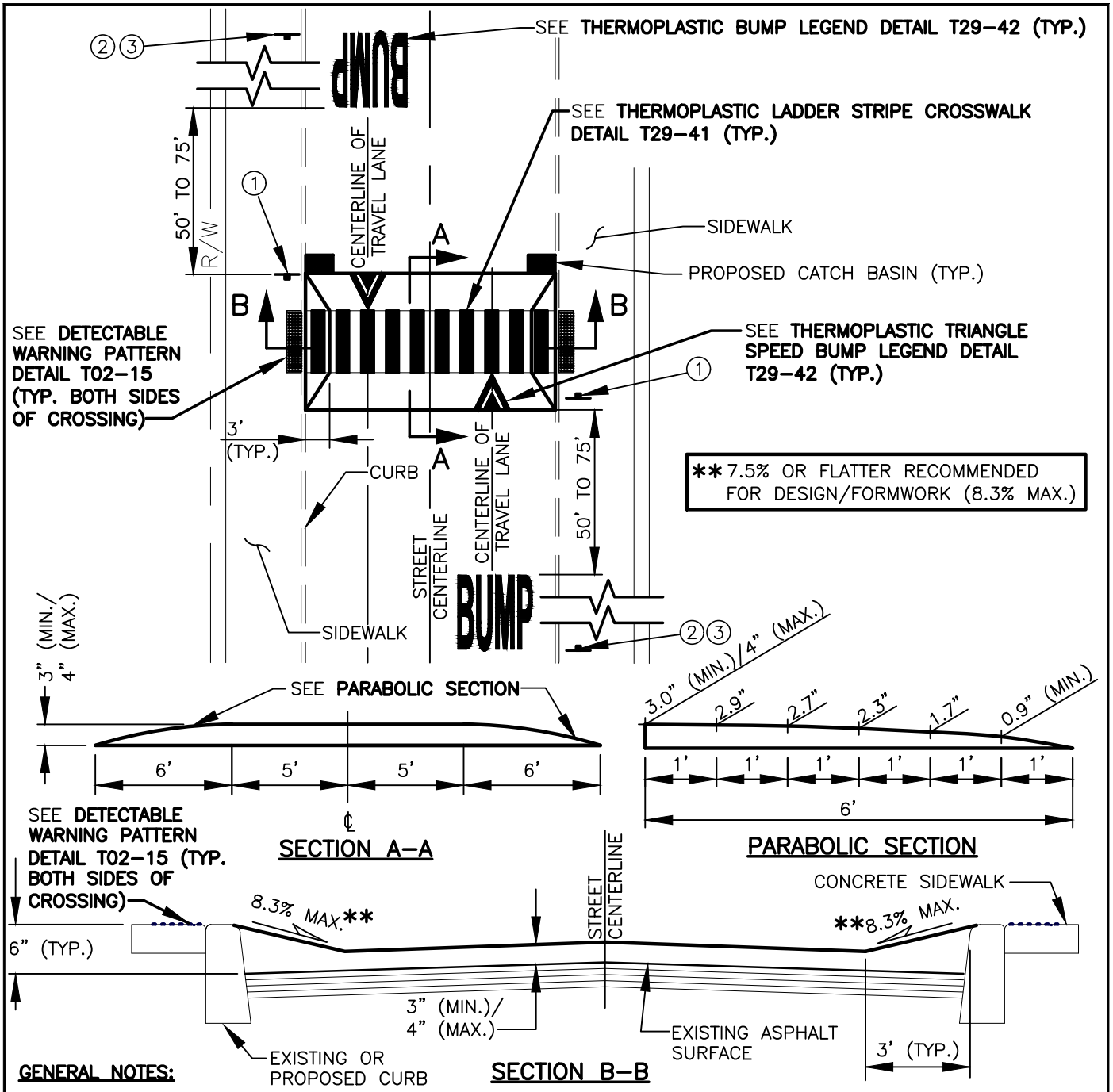

GENERAL NOTES:

1. RAISED CROSSWALK REQUIRES STORM WATER TO BE COLLECTED AND CONVEYED TO AN APPROPRIATE LOCATION.

2. RAISED CROSSWALK SHALL BE CONSTRUCTED OF HOT MIX ASPHALT CLASS 3/8" PG 58H-22 0.3 TO 3.0 ESAL MIX DESIGN UNLESS OTHERWISE SPECIFIED.

SIGNS:

(1) INSTALL MUTCD STANDARD SIGNS W11-2 AND W16-7 UNLESS IN SCHOOL WALK ROUTE THEN USE S1-1 AND W16-7. SEE **SIGN MOUNTING DETAILS T29-02 AND T29-03.**

(2) INSTALL MUTCD STANDARD W17-1 ("SPEED BUMP") SIGN 150' (POSTED SPEED=25MPH) OR 175' (POSTED SPEED=30MPH) AHEAD OF RAISED CROSSWALK AT BEGINNING OF A SERIES OF HUMPS OR AS NECESSARY. SEE **SIGN MOUNTING DETAILS T29-02 AND T29-03.**

(3) IN PLACING SIGNS AT MULTIPLE RAISED CROSSWALKS ALONG A ROADWAY, HAVE THE SIGNS AT THE BEGINNING OF THE INSTALLATION WITH SUPPLEMENTAL SIGN "W16-4" DESIGNATING HOW MANY BLOCK, NOT AT EACH RAISED CROSSWALK.

REV NO.	DATE	BY	APPR
1	7/14	RAW	MHA
2	1/15	RAW	MHA
3	3/17	RAW	MHA
4	4/18	RAW	MHA
5	7/19	RAW	MHA
6	9/21	RAW	MHA

PUBLIC WORKS – STREETS AND TRANSPORTATION

APPROVED BY: M H Abdalla
ENGINEER MANAGER
APPROVED DATE: 9/1/2021

CITY OF Vancouver WASHINGTON

RAISED CROSSWALK PREFERRED OPTION

STANDARD PLAN NUMBER T02-20

I:\CITYAPPS\AUTOCAD\STD_DETAILS\DRAWING_FILES\T02-20

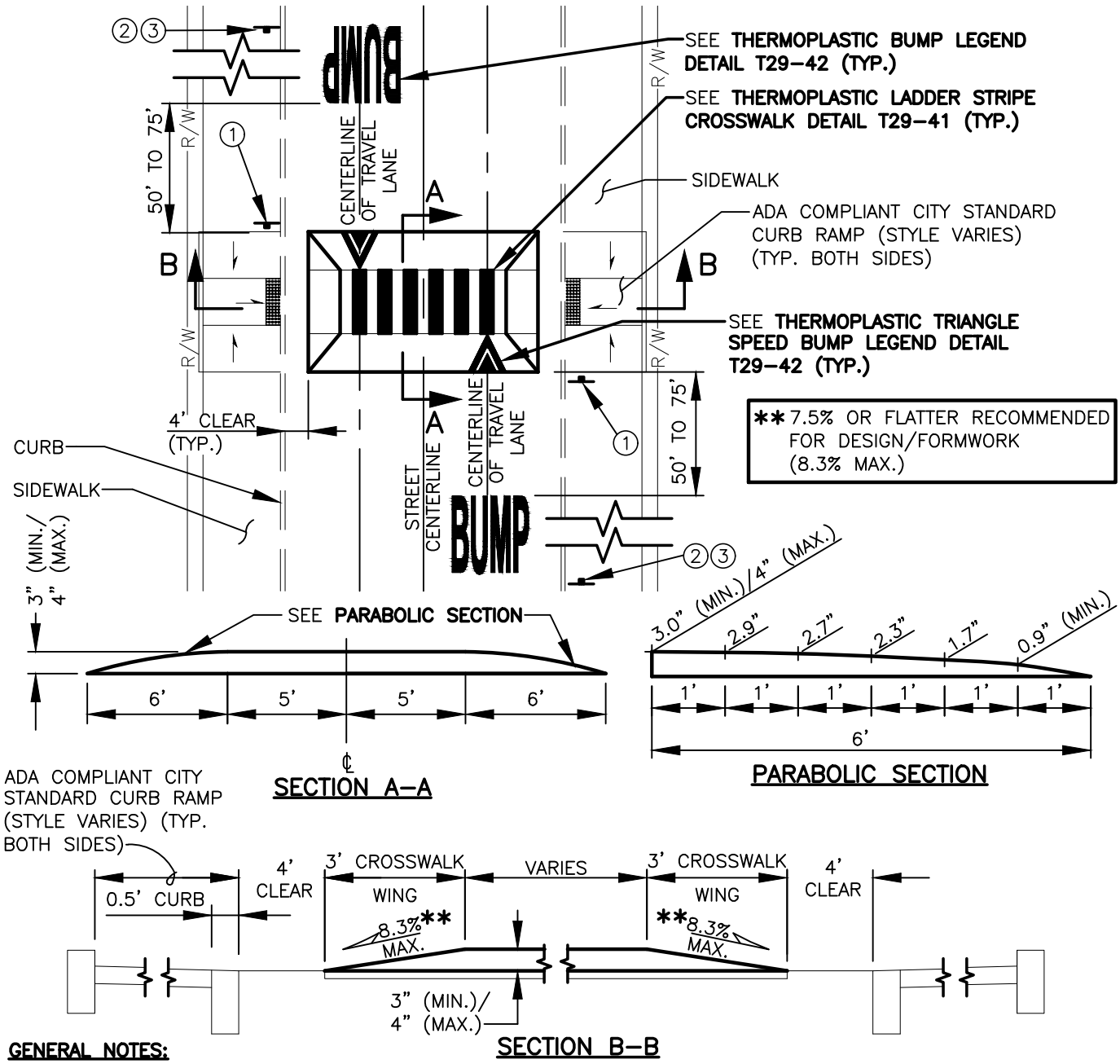

GENERAL NOTES:

1. RAISED CROSSWALK REQUIRES STORM WATER TO BE COLLECTED AND CONVEYED TO AN APPROPRIATE LOCATION.
2. USE THIS OPTION ONLY WITH APPROVAL FROM CITY DIRECTOR.
3. RAISED CROSSWALK SHALL BE CONSTRUCTED OF HOT MIX ASPHALT CLASS 3/8" PG 58H-22 0.3 TO 3.0 ESAL MIX DESIGN UNLESS OTHERWISE SPECIFIED.

SIGNS:

(1) INSTALL MUTCD STANDARD SIGNS W11-2 AND W16-7 UNLESS IN SCHOOL WALK ROUTE THEN USE S1-1 AND W16-7. SEE **SIGN MOUNTING DETAILS T29-02 AND T29-03.**

(2) INSTALL MUTCD STANDARD W17-1 ("SPEED BUMP") SIGN 150' (POSTED SPEED=25MPH) OR 175' (POSTED SPEED=30MPH) AHEAD OF RAISED CROSSWALK AT BEGINNING OF A SERIES OF HUMPS OR AS NECESSARY. SEE **SIGN MOUNTING DETAILS T29-02 AND T29-03.**

(3) IN PLACING SIGNS AT MULTIPLE RAISED CROSSWALKS ALONG A ROADWAY, HAVE THE SIGNS AT THE BEGINNING OF THE INSTALLATION WITH SUPPLEMENTAL SIGN "W16-4" DESIGNATING HOW MANY BLOCK, NOT AT EACH RAISED CROSSWALK.

REV NO.	DATE	BY	APPR
1	8/08	RAW	MHA
2	7/14	RAW	MHA
3	1/15	RAW	MHA
4	3/17	RAW	MHA
5	7/19	RAW	MHA
6	9/21	RAW	MHA

PUBLIC WORKS – STREETS AND TRANSPORTATION

APPROVED BY: M H Abdalla
ENGINEER MANAGER

APPROVED DATE: 9/1/2021

CITY OF Vancouver WASHINGTON

RAISED CROSSWALK OPTION B

STANDARD PLAN NUMBER T02-21

I:\CITYAPPS\AUTOCAD\STD_DETAILS\DRAWING_FILES\T02-21

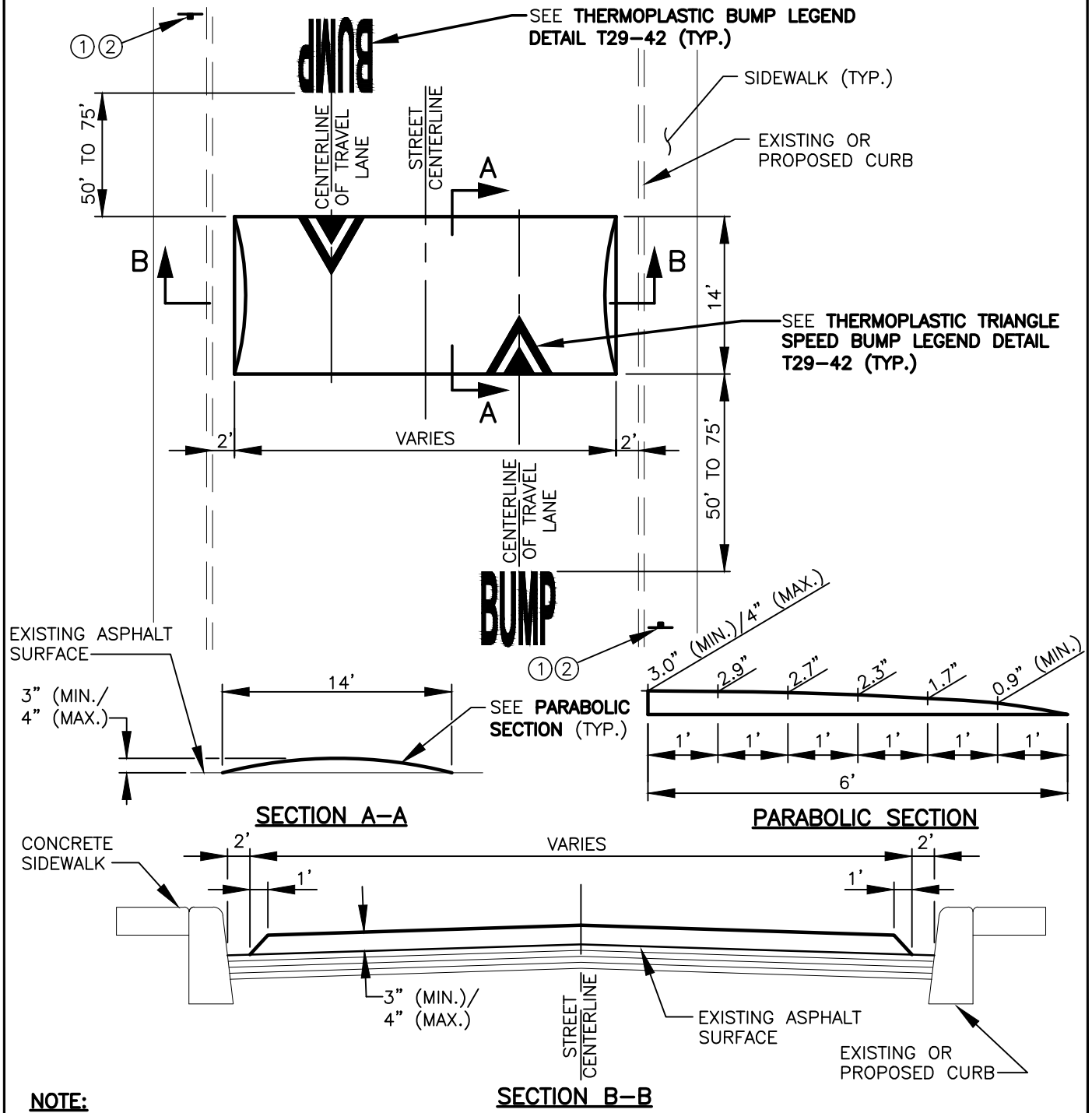

NOTE:

1. SPEED BUMP SHALL BE CONSTRUCTED OF HOT MIX ASPHALT CLASS 3/8" PG 58H-22 0.3 TO 3.0 ESAL MIX DESIGN UNLESS OTHERWISE SPECIFIED.

SIGNS:

① INSTALL MUTCD STANDARD W17-1 ("SPEED BUMP") SIGN 150' (POSTED SPEED=25MPH) OR 175' (POSTED SPEED=30MPH) AHEAD OF RAISED CROSSWALK AT BEGINNING OF A SERIES OF HUMPS OR AS NECESSARY. SEE **SIGN MOUNTING DETAILS T29-02 AND T29-03.**

② IN PLACING SIGNS AT MULTIPLE SPEED BUMPS ALONG A ROADWAY, HAVE THE SIGNS AT THE BEGINNING OF THE INSTALLATION WITH SUPPLEMENTAL SIGN "W16-4" DESIGNATING HOW MANY BLOCK, NOT AT EACH RAISED CROSSWALK.

REV NO.	DATE	BY	APPR
1	2/07	RAW	MHA
2	8/08	RAW	MHA
3	7/14	RAW	MHA
4	1/15	RAW	MHA
5	7/19	RAW	MHA
6	9/21	RAW	MHA

PUBLIC WORKS – STREETS AND TRANSPORTATION

APPROVED BY: M H Abdalla
ENGINEER MANAGER
APPROVED DATE: 9/1/2021

CITY OF Vancouver WASHINGTON

SPEED BUMP

STANDARD PLAN NUMBER T02-22

I:\CITYAPPS\AUTOCAD\STD_DETAILS\DRAWING_FILES\T02-22

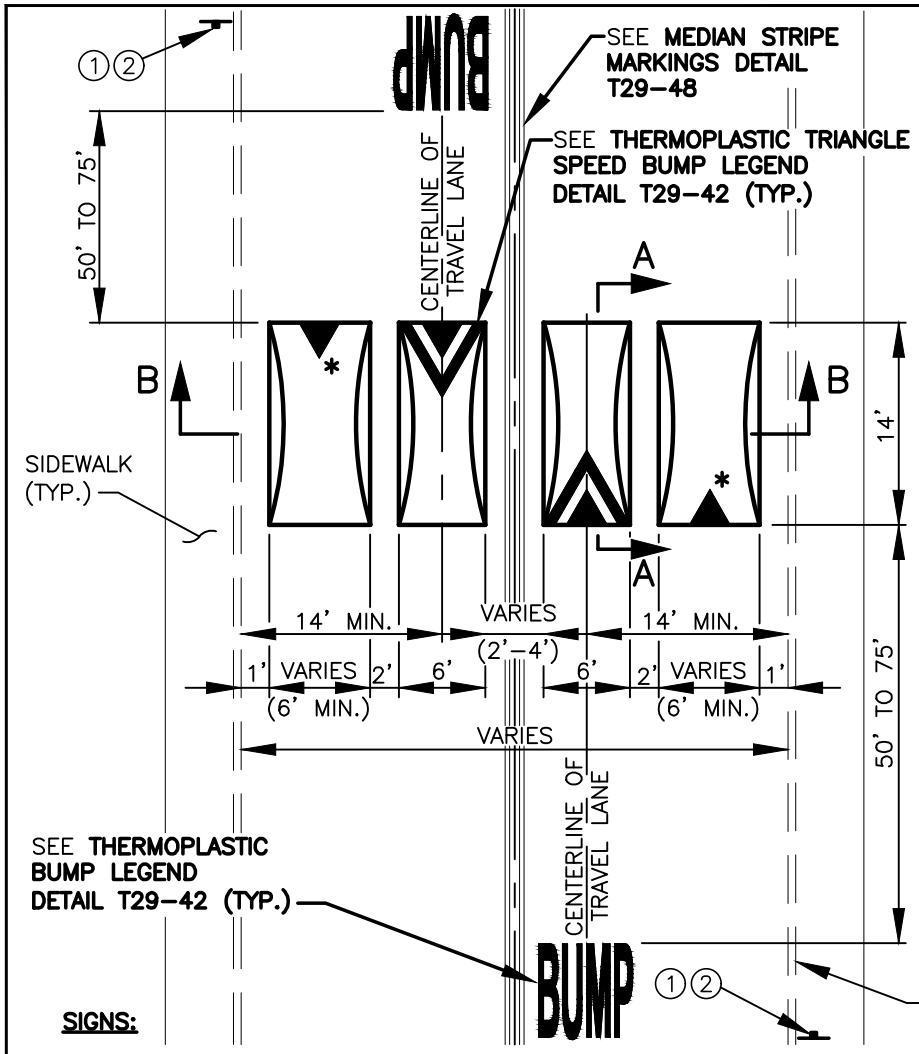

NOTES:

1. POSITION SPEED CUSHIONS ON STRAIGHT SECTIONS OF ROADWAY.
2. USE OF TYPE I ON STREETS LESS THAN 38' WIDE REQUIRES PARKING RESTRICTIONS 50' ON EACH SIDE.
3. TYPE I NOT APPROPRIATE FOR STREETS LESS THAN 36' WIDE.
4. CENTERLINE STRIPE MAY NOT BE IN THE CENTER OF ROADWAY, BUT IF NOT STRIPED, POSITION CUSHIONS SYMMETRICAL TO CENTER OF ROADWAY.
5. SPEED CUSHION SHALL BE CONSTRUCTED OF HOT MIX ASPHALT CLASS 3/8" PG 58H-22 0.3 TO 3.0 ESAL MIX DESIGN UNLESS OTHERWISE SPECIFIED.
6. * USE ADDITIONAL PAVEMENT MARKING ON STREETS WITH BIKE LANES (CENTER IN BIKE LANE). SEE **BIKE LANE TRIANGLE SPEED BUMP LEGEND DETAIL T29-42 (TYP.)**
7. 0.9" (MIN.) AT FIRST 1', AT TOP 3" (MIN.)/4" (MAX.).

SIGNS:

1 INSTALL MUTCD STANDARD W17-1 ("SPEED BUMP") SIGN 150' (POSTED SPEED=25MPH) OR 175' (POSTED SPEED=30MPH) AHEAD OF RAISED CROSSWALK AT BEGINNING OF A SERIES OF HUMPS OR AS NECESSARY. SEE **SIGN MOUNTING DETAILS T29-02 AND T29-03.**

2 IN PLACING SIGNS AT MULTIPLE SPEED CUSHIONS ALONG A ROADWAY, HAVE THE SIGNS AT THE BEGINNING OF THE INSTALLATION WITH SUPPLEMENTAL SIGN "W16-4" DESIGNATING HOW MANY BLOCK, NOT AT EACH RAISED CROSSWALK.

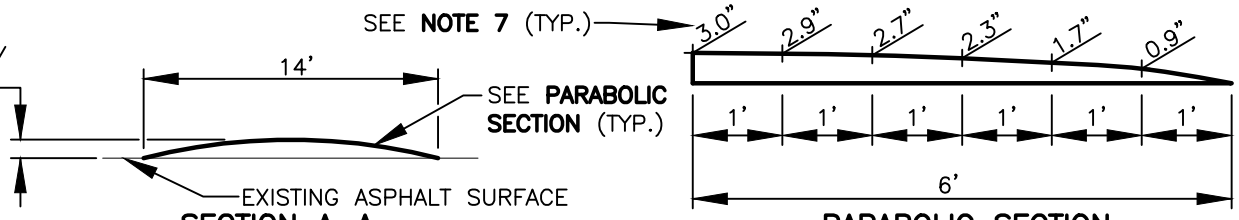

SECTION A-A

PARABOLIC SECTION

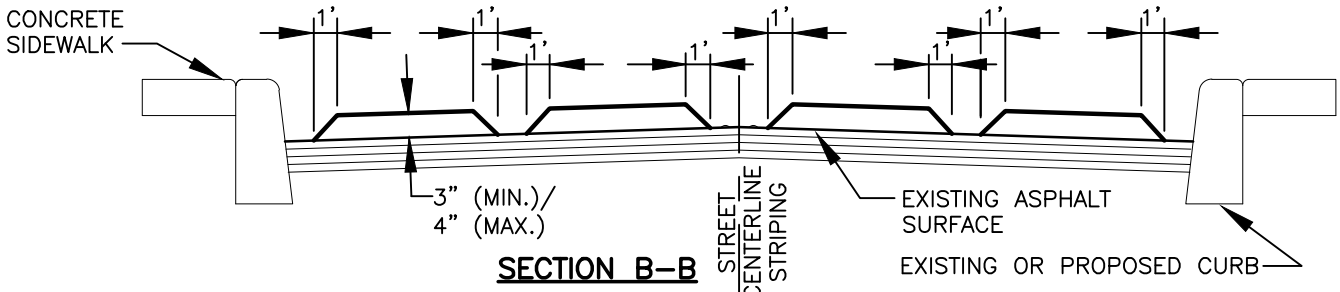

SECTION B-B

REV NO.	DATE	BY	APPR
1	2/07	RAW	MHA
2	8/08	RAW	MHA
3	7/14	RAW	MHA
4	1/15	RAW	MHA
5	7/19	RAW	MHA
6	9/21	RAW	MHA

PUBLIC WORKS – STREETS AND TRANSPORTATION

APPROVED BY: M H Abdalla
ENGINEER MANAGER

APPROVED DATE: 9/1/2021

CITY OF Vancouver WASHINGTON

SPEED CUSHION TYPE I

STANDARD PLAN NUMBER T02-23

I:\CITYAPPS\AUTOCAD\STD_DETAILS\DRAWING_FILES\T0-23

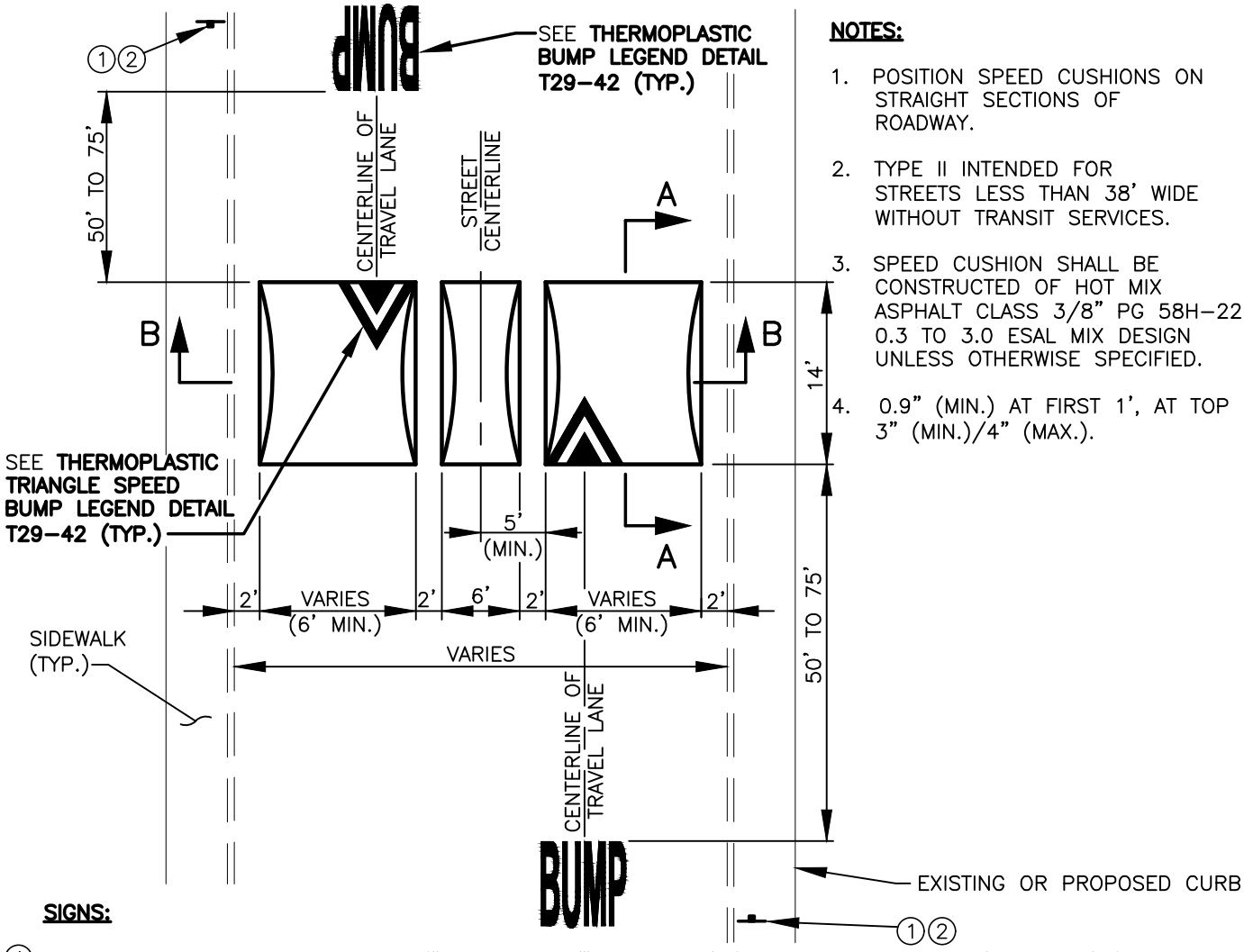

NOTES:

1. POSITION SPEED CUSHIONS ON STRAIGHT SECTIONS OF ROADWAY.
2. TYPE II INTENDED FOR STREETS LESS THAN 38' WIDE WITHOUT TRANSIT SERVICES.
3. SPEED CUSHION SHALL BE CONSTRUCTED OF HOT MIX ASPHALT CLASS 3/8" PG 58H–22 0.3 TO 3.0 ESAL MIX DESIGN UNLESS OTHERWISE SPECIFIED.
4. 0.9" (MIN.) AT FIRST 1', AT TOP 3" (MIN.)/4" (MAX.).

SIGNS:

① INSTALL MUTCD STANDARD W17–1 ("SPEED BUMP") SIGN 150' (POSTED SPEED=25MPH) OR 175' (POSTED SPEED=30MPH) AHEAD OF RAISED CROSSWALK AT BEGINNING OF A SERIES OF HUMPS OR AS NECESSARY. SEE **SIGN MOUNTING DETAILS T29–02 AND T29–03.**

② IN PLACING SIGNS AT MULTIPLE SPEED CUSHIONS ALONG A ROADWAY, HAVE THE SIGNS AT THE BEGINNING OF THE INSTALLATION WITH SUPPLEMENTAL SIGN "W16–4" DESIGNATING HOW MANY BLOCK, NOT AT EACH RAISED CROSSWALK.

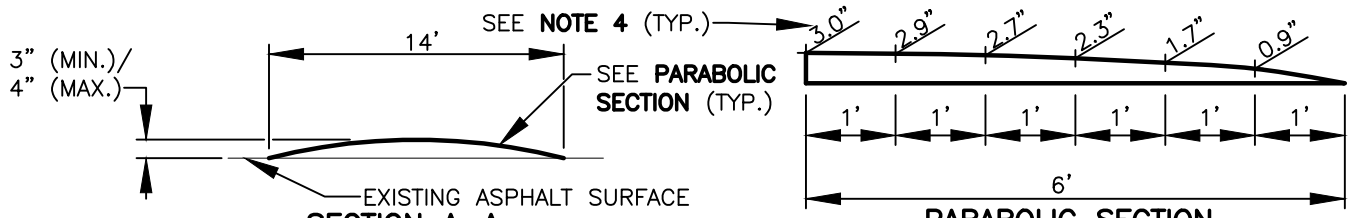

SECTION A–A

PARABOLIC SECTION

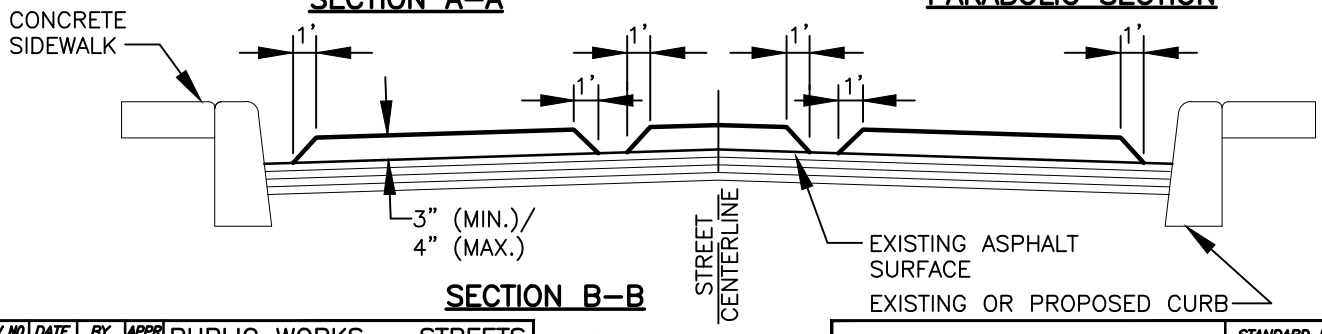

SECTION B–B

REV NO.	DATE	BY	APPR
1	2/07	RAW	MHA
2	8/08	RAW	MHA
3	7/14	RAW	MHA
4	1/15	RAW	MHA
5	7/19	RAW	MHA
6	9/21	RAW	MHA

PUBLIC WORKS – STREETS AND TRANSPORTATION

APPROVED BY: M H Abdalla
ENGINEER MANAGER

APPROVED DATE: 9/1/2021

CITY OF Vancouver WASHINGTON

SPEED CUSHION TYPE II

STANDARD PLAN NUMBER T02–24

I:\CITYAPPS\AUTOCAD\STD_DETAILS\DRAWING_FILES\T0-24

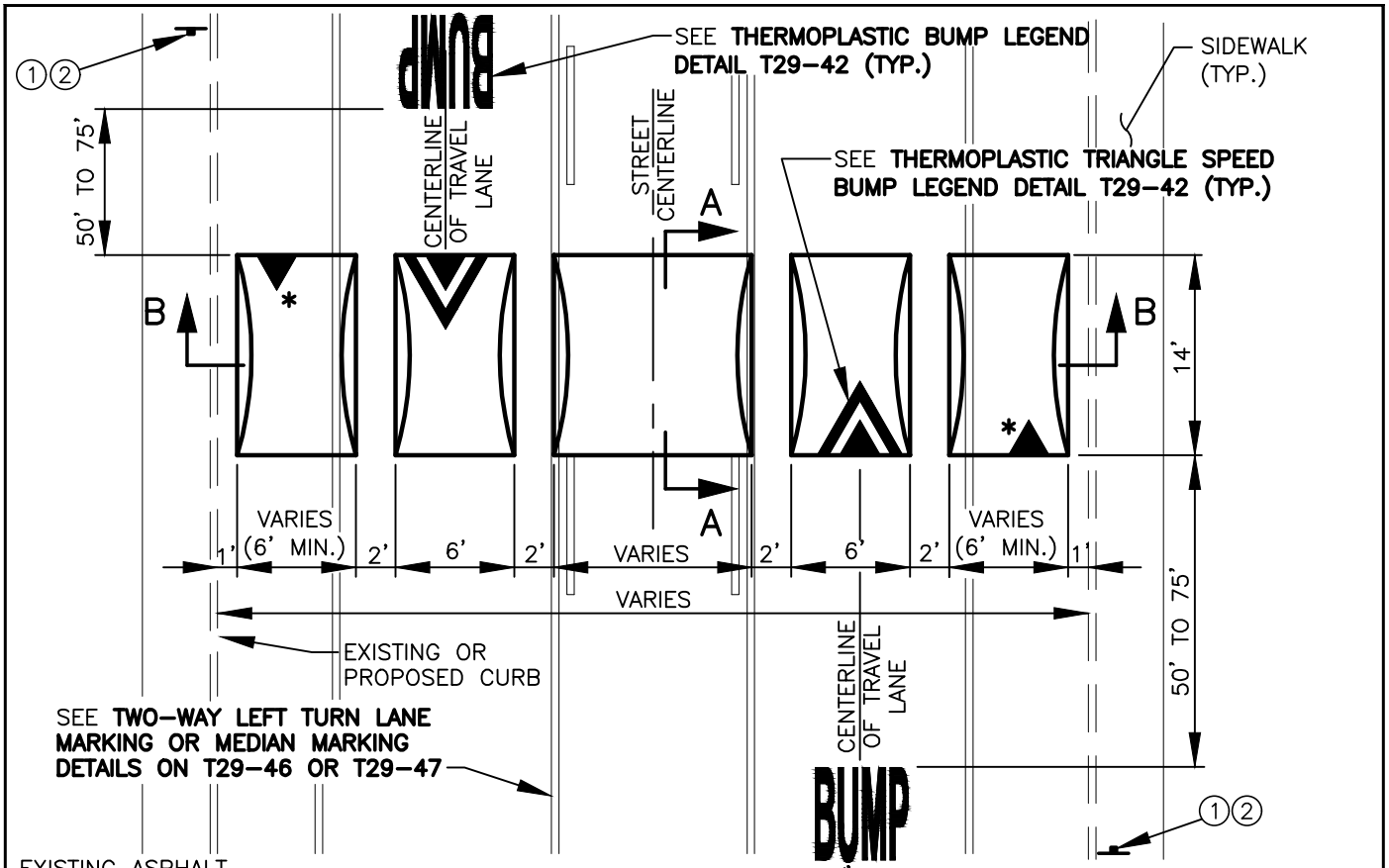

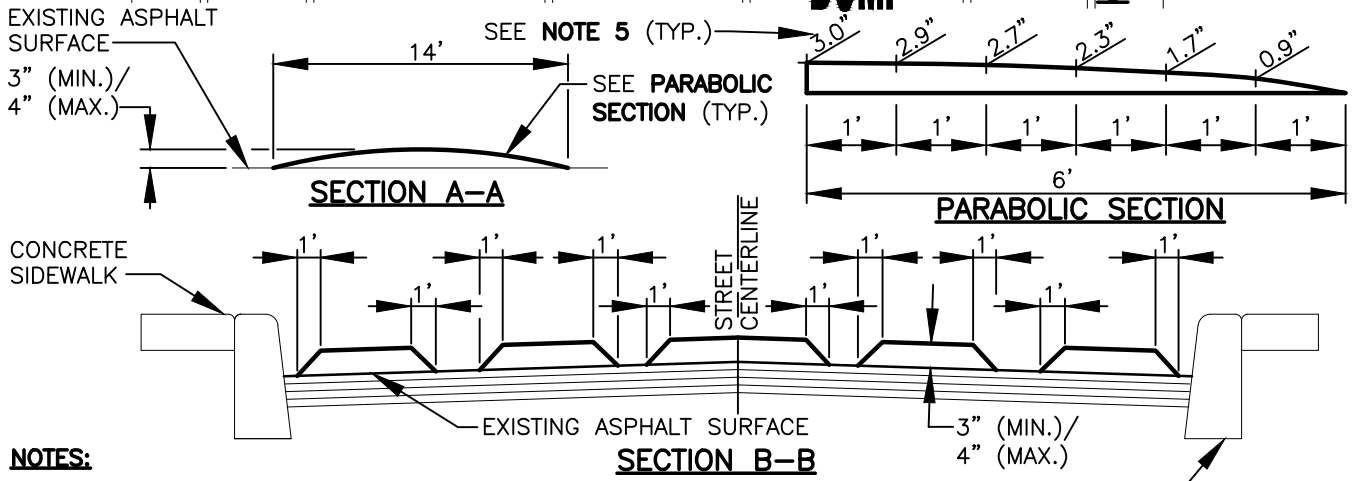

NOTES:

1. POSITION SPEED CUSHIONS ON STRAIGHT SECTIONS OF ROADWAY.
2. HOLD EDGE OF SPEED CUSHION A MINIMUM OF 3' FROM MEDIAN CURB.
3. SPEED CUSHION SHALL BE CONSTRUCTED OF HOT MIX ASPHALT CLASS 3/8" PG 58H-22 0.3 TO 3.0 ESAL MIX DESIGN UNLESS OTHERWISE SPECIFIED.
4. *USE ADDITIONAL PAVEMENT MARKING ON STREETS WITH BIKE LANES (CENTER IN BIKE LANE. SEE **BIKE LANE TRIANGLE SPEED BUMP LEGEND DETAIL T29-42 (TYP.).**
5. 0.9" (MIN.) AT FIRST 1', AT TOP 3" (MIN.)/4" (MAX.).

SIGNS:

(1) INSTALL MUTCD STANDARD W17-1 ("SPEED BUMP") SIGN 150' (POSTED SPEED=25MPH) OR 175' (POSTED SPEED=30MPH) AHEAD OF RAISED CROSSWALK AT BEGINNING OF A SERIES OF HUMPS OR AS NECESSARY. SEE **SIGN MOUNTING DETAILS T29-02 AND T29-03.**

(2) IN PLACING SIGNS AT MULTIPLE SPEED CUSHIONS ALONG A ROADWAY, HAVE THE SIGNS AT THE BEGINNING OF THE INSTALLATION WITH SUPPLEMENTAL SIGN "W16-4" DESIGNATING HOW MANY BLOCK, NOT AT EACH RAISED CROSSWALK.

REV NO.	DATE	BY	APPR
1	2/07	RAW	MHA
2	8/08	RAW	MHA
3	7/14	RAW	MHA
4	1/15	RAW	MHA
5	7/19	RAW	MHA
6	9/21	RAW	MHA

PUBLIC WORKS - STREETS AND TRANSPORTATION

APPROVED BY: M H Abdalla
ENGINEER MANAGER
APPROVED DATE: 9/1/2021

CITY OF Vancouver WASHINGTON

SPEED CUSHION TYPE III

STANDARD PLAN NUMBER T02-25

I:\CITYAPPS\AUTOCAD\STD_DETAILS\DRAWING_FILES\T0-25

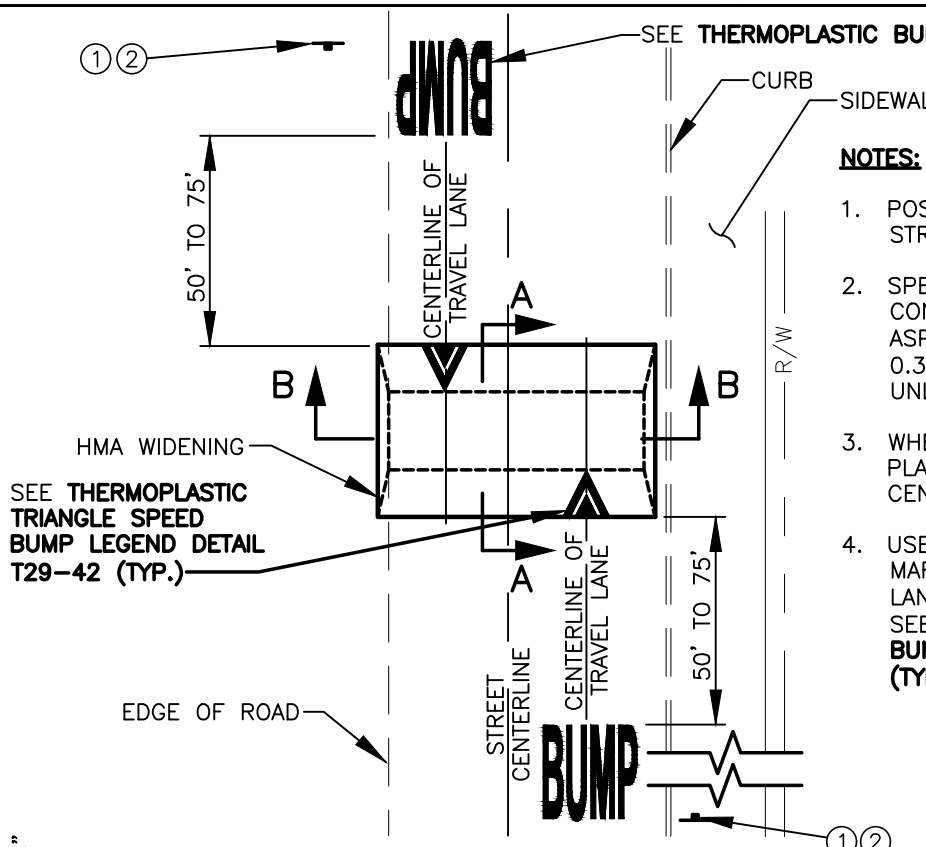

NOTES:

1. POSITION SPEED TABLES ON STRAIGHT SECTIONS OF ROADWAY.
2. SPEED TABLE SHALL BE CONSTRUCTED OF HOT MIX ASPHALT CLASS 3/8" PG 58H-22 0.3 TO 3.0 ESAL MIX DESIGN UNLESS OTHERWISE SPECIFIED.
3. WHERE BIKE LANES ARE PRESENT, PLACE END OF SPEED TABLE AT CENTER OF BIKE LANE.
4. USE ADDITIONAL PAVEMENT MARKING ON STREETS WITH BIKE LANES (CENTER IN BIKE LANE). SEE **BIKE LANE TRIANGLE SPEED BUMP LEGEND DETAIL T29-42 (TYP.)**

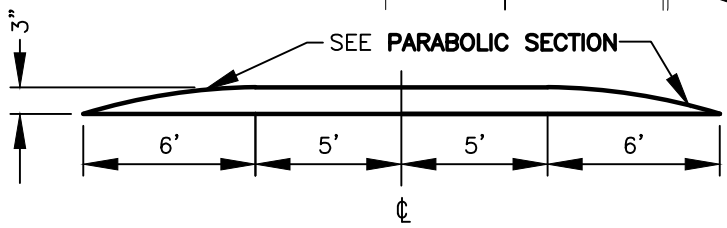

SECTION A-A

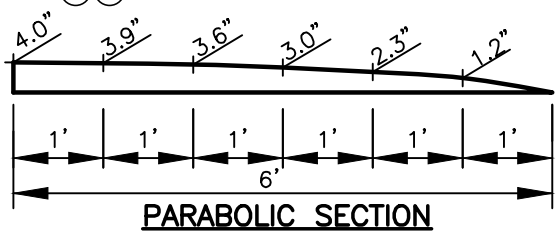

PARABOLIC SECTION

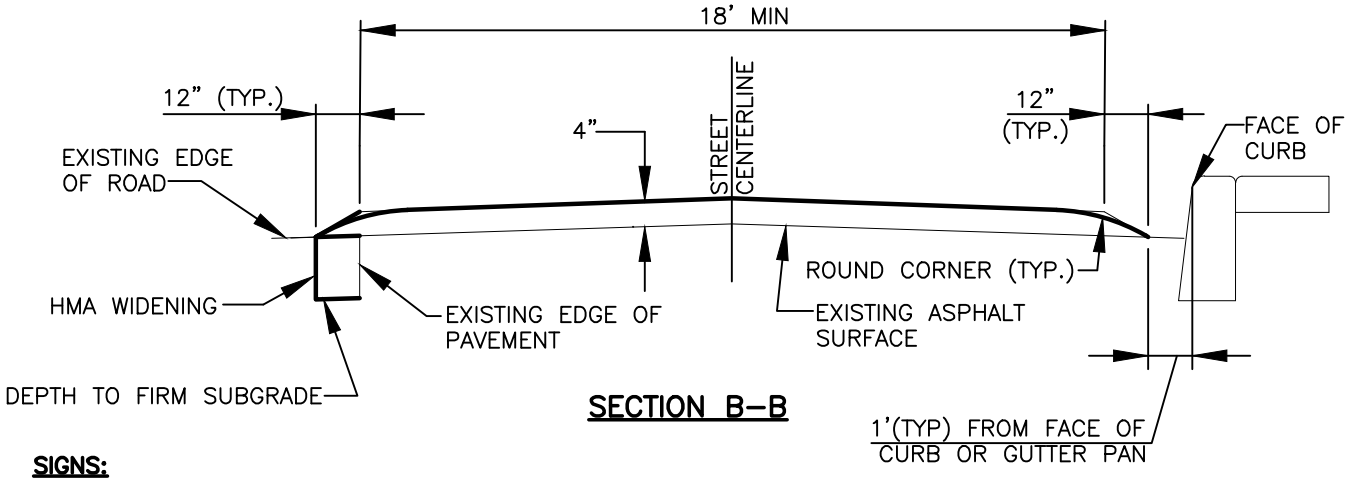

SECTION B-B

SIGNS:

1. INSTALL MUTCD STANDARD W17-1 ("SPEED BUMP") SIGN 150' AHEAD OF SPEED TABLE AT THE BEGINING OF A SERIES OF SPEED TABLES OR AS NECESSARY SEE **SIGN MOUNTING DETAILS T29-02 AND T29-03**
2. IN PLACING SIGNS AT MULTIPLE SPEED TABLES ALONG A ROADWAY, PLACE SIGNS AT THE BEGINNING OF THE INSTALLATION WITH SUPPLEMENTAL SIGN "W16-4" DESIGNATING HOW MANY BLOCKS, NOT AT EACH SPEED TABLE.

REV NO.	DATE	BY	APPR
1	7/19	RAW	MHA
2	9/21	RAW	MHA

PUBLIC WORKS – STREETS AND TRANSPORTATION

APPROVED BY: M H Abdalla
ENGINEER MANAGER
APPROVED DATE: 9/1/2021

CITY OF Vancouver WASHINGTON

SPEED TABLE (25 MPH POSTED)

STANDARD PLAN NUMBER T02-26A

I:\CITYAPPS\AUTOCAD\STD_DETAILS\DRAWING_FILES\T02-26A

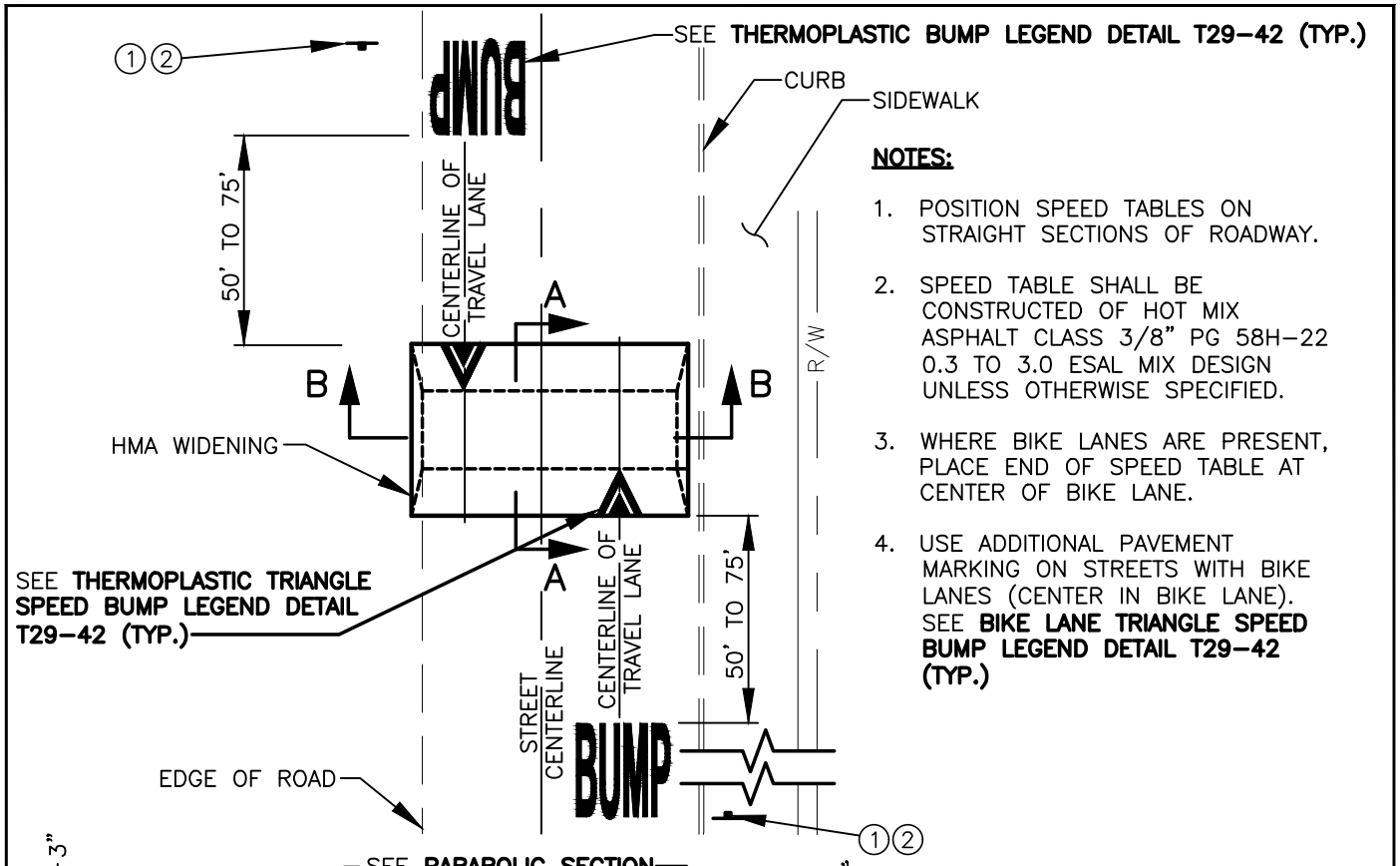

NOTES:

1. POSITION SPEED TABLES ON STRAIGHT SECTIONS OF ROADWAY.
2. SPEED TABLE SHALL BE CONSTRUCTED OF HOT MIX ASPHALT CLASS 3/8" PG 58H-22 0.3 TO 3.0 ESAL MIX DESIGN UNLESS OTHERWISE SPECIFIED.
3. WHERE BIKE LANES ARE PRESENT, PLACE END OF SPEED TABLE AT CENTER OF BIKE LANE.
4. USE ADDITIONAL PAVEMENT MARKING ON STREETS WITH BIKE LANES (CENTER IN BIKE LANE). SEE **BIKE LANE TRIANGLE SPEED BUMP LEGEND DETAIL T29-42 (TYP.)**

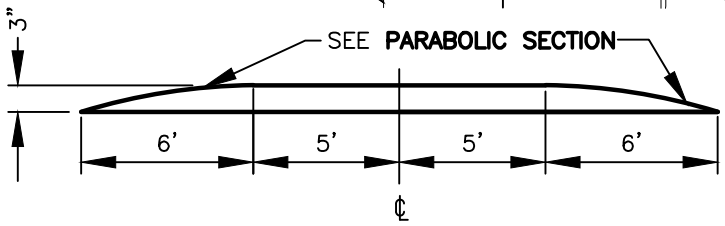

SECTION A-A

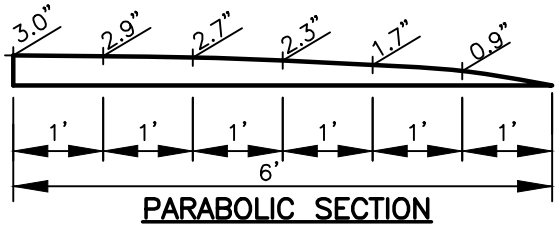

PARABOLIC SECTION

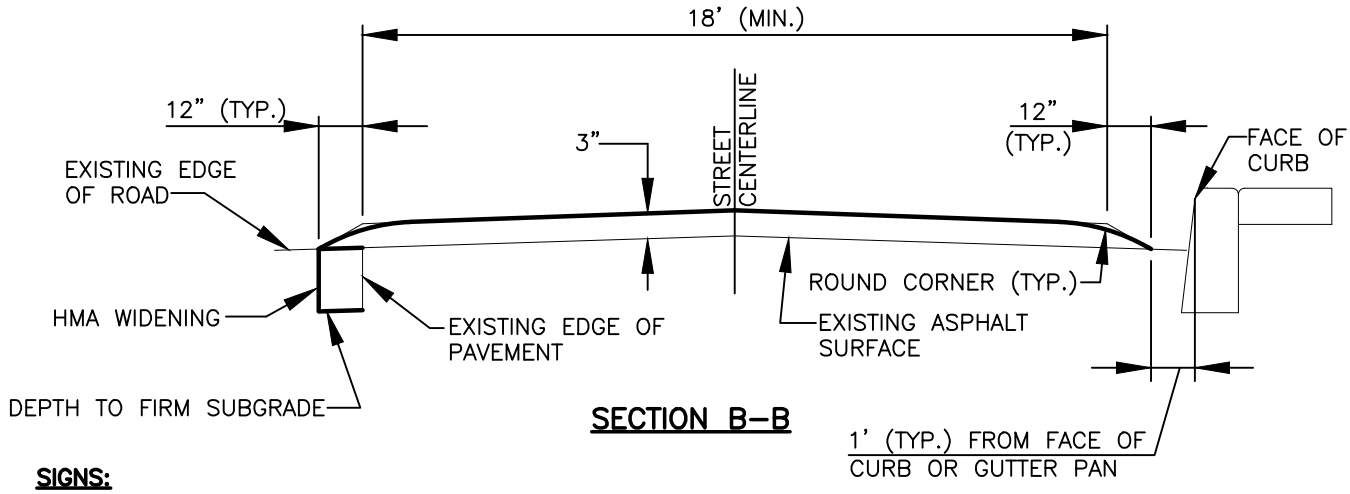

SECTION B-B

SIGNS:

① INSTALL MUTCD STANDARD W17-1 ("SPEED BUMP") SIGN 175' AHEAD OF SPEED TABLE AT THE BEGINING OF A SERIES OF SPEED TABLES OR AS NECESSARY SEE **SIGN MOUNTING DETAILS T29-02 AND T29-03**

② IN PLACING SIGNS AT MULTIPLE SPEED TABLES ALONG A ROADWAY, PLACE SIGNS AT THE BEGINNING OF THE INSTALLATION WITH SUPPLEMENTAL SIGN "W16-4" DESIGNATING HOW MANY BLOCKS, NOT AT EACH SPEED TABLE.

REV NO.	DATE	BY	APPR
1	7/19	RAW	MHA
2	9/21	RAW	MHA

PUBLIC WORKS – STREETS AND TRANSPORTATION

APPROVED BY: M H Abdalla
ENGINEER MANAGER
APPROVED DATE: 9/1/2021

CITY OF Vancouver WASHINGTON

SPEED TABLE (30 MPH POSTED)

STANDARD PLAN NUMBER T02-26B

I:\CITYAPPS\AUTOCAD\STD_DETAILS\DRAWING_FILES\T02-26B

IRRIGATION NOTES

1. THE CONTRACTOR SHALL INSPECT THE SITE AND VERIFY CONDITIONS AND DIMENSIONS PRIOR TO CONSTRUCTION.

2. IRRIGATION PLANS ARE SCHEMATIC REPRESENTATIONS ONLY. PLACE LINES IN A COMMON TRENCH WHENEVER POSSIBLE. FIELD ADJUST LINES TO AVOID CONFLICT WITH UTILITIES.

3. IRRIGATION IS COORDINATED WITH THE PLANTING PLAN AND SITE IMPROVEMENTS AND IS DESIGNED WITH TRIANGULAR SPACING GIVING HEAD TO HEAD COVERAGE. COORDINATE IRRIGATION HEAD LAYOUT WITH NEW PLANT MATERIALS, LOCATE SPRAY HEADS 30" FROM BASE OF TREE. DO NOT ALTER HEAD LOCATION, PIPE LAYOUT, OR VALVE LOCATION WITHOUT WRITTEN APPROVAL FROM THE CONSTRUCTION MANAGER. NOTIFY CONSTRUCTION MANAGER IF DISCREPANCIES OCCUR BETWEEN THE PLANS AND FIELD CONDITIONS.

4. ALL COMPONENTS OF IRRIGATION SYSTEM SHALL BE INSTALLED AND PROPERLY ADJUSTED TO PROVIDE ADEQUATE COVERAGE AND MINIMIZATION OF OVER SPRAY ONTO WALKS, BUILDINGS, PARKING AREAS, ETC.

5. ALL PIPE SIZES INDICATED ARE MINIMUMS. CONTRACTOR MAY NOT DECREASE PIPE SIZE. LARGER PIPE SIZES MAY BE USED AT NO ADDITIONAL COST TO OWNER. IRRIGATION LATERALS ARE SIZED BEGINNING AT THE AUTOMATIC VALVE AND CONTINUING IN DIRECTION OF FLOW. REDUCTIONS IN PIPE SIZE ARE LABELED BEGINNING DOWNSTREAM OF NEAREST FITTING. ALL LATERALS NOT SIZED ARE MINIMUM 3/4".

6. INSTALL ALL IRRIGATION PIPE AND CONTROL WIRES IN MINIMUM 4" PVC SLEEVE BELOW ALL PAVED SURFACES UNLESS OTHERWISE INDICATED ON THE PLANS. INSTALL SLEEVES PRIOR TO PLACEMENT OF PAVEMENTS AND PAVEMENT SUB-BASE. SEE **PIPE SLEEVING** DETAIL FOR FURTHER REQUIREMENTS.

7. COORDINATE IRRIGATION POINTS OF CONNECTION AND LOCATION OF AUTOMATIC CONTROL VALVES WITH PROJECT MANAGER. COORDINATE ALL WORK WITH OTHER TRADES, I.E. ELECTRICAL, MASONRY, ETC.

8. CONTRACTOR TO PROGRAM AUTOMATIC CONTROLLER TO ALLOW FOR THE EQUIVALENT OF 1" OF WATER PER WEEK.

9. ALL PIPES SHALL BE TRENCHED. PROVIDE POSITIVE DRAINAGE OF MAINLINE. PLACE MANUAL DRAIN AT LOW POINTS IN MAINLINE. IDENTIFY LOCATIONS ON AS-BUILTS.

10. USE 45° ELBOWS INSTEAD OF 90° ELBOWS ON ALL MAINLINES 2-1/2" AND LARGER. INSTALL CONCRETE THRUST BLOCKS AT ALL MAINLINE CHANGES IN DIRECTION. POUR MINIMUM OF 1 CUBIC FOOT OF CONCRETE ON UNDISTURBED SOIL. WRAP PIPE IN PLASTIC WRAP PRIOR TO COVERING WITH CONCRETE.

11. OWNER (OR CONTRACTOR) TO INSTALL CONTROLLER, CCU ELECTRICAL, PHONE AND ACCESSORIES AS REQUIRED. CONTRACTOR TO FURNISH CONTROL WIRES FROM VALVES TO CONTROLLER. THE OWNER WILL WIRE ALL INTERNAL COMPONENTS. CONTRACTOR SHALL BE RESPONSIBLE FOR COORDINATING 110 VOLT SERVICE FROM BUILDING TO EXISTING JUNCTION BOX IN CONTROLLER HOUSING AND CONNECT CONTROLLER SERVICE.

12. SEE SPECIFICATIONS FOR FURTHER REQUIREMENTS.

13. WATER METER SHALL BE INSTALLED BY OWNER. CONTRACTOR RESPONSIBLE FOR CONNECTIONS DOWNSTREAM OF WATER METER.

14. IRRIGATION SYSTEM IS DESIGNED BASED ON CITY WATER PRESSURE OF 70 PSI PRIOR TO POINT OF CONNECTION. VERIFY CONDITION AND NOTIFY CONSTRUCTION MANAGER IF DIFFERENCES ARISE BETWEEN ACTUAL PRESSURE AND DESIGN PRESSURE.

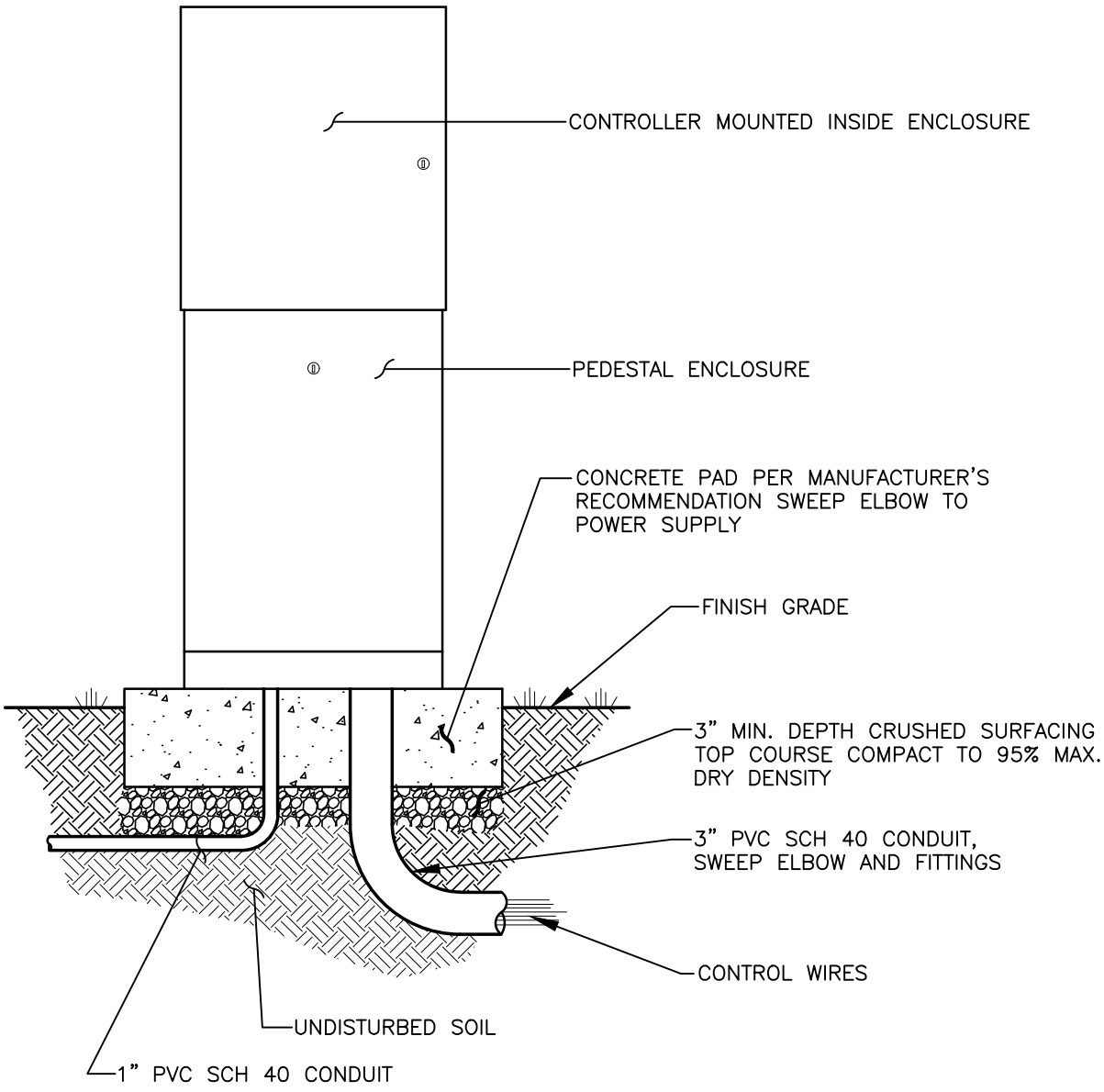

REV NO.	DATE	BY	APPR
1	2/07	RAW	MHA
2	8/08	RAW	MHA
3	7/14	RAW	MHA
4	4/18	RAW	MHA
5	9/21	RAW	MHA

PUBLIC WORKS – STREETS AND TRANSPORTATION

APPROVED BY: M H Ledalla
ENGINEER MANAGER

APPROVED DATE: 9/1/2021

CITY OF Vancouver WASHINGTON

IRRIGATION CONTROLLER ENCLOSURE

STANDARD PLAN NUMBER

T03–02

I:\CITYAPPS\AUTOCAD\STD_DETAILS\DRAWING_FILES\T03-02

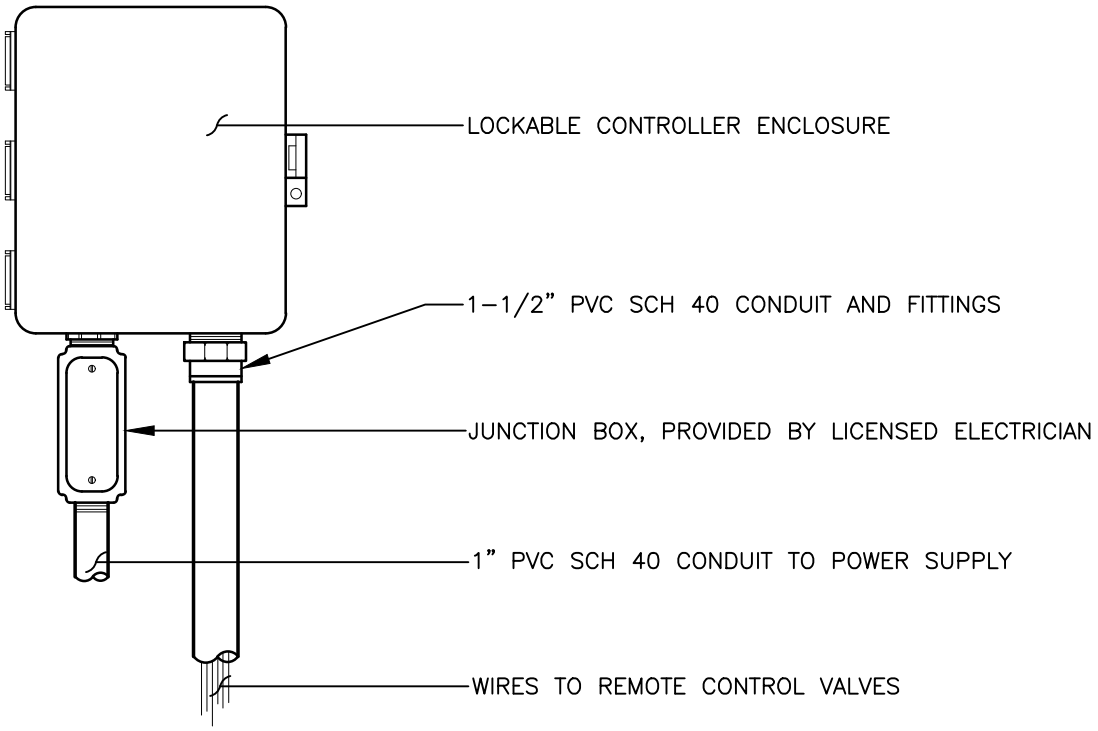

REV NO.	DATE	BY	APPR
1	2/07	RAW	MHA
2	8/08	RAW	MHA
3	7/14	RAW	MHA
4	9/21	RAW	MHA

PUBLIC WORKS – STREETS AND TRANSPORTATION

APPROVED BY: M H Abdalla
ENGINEER MANAGER

APPROVED DATE: 9/1/2021

CITY OF Vancouver WASHINGTON

IRRIGATION CONTROLLER WALL MOUNT

STANDARD PLAN NUMBER

T03–03

I:\CITYAPPS\AUTOCAD\STD_DETAILS\DRAWING_FILES\T03-03

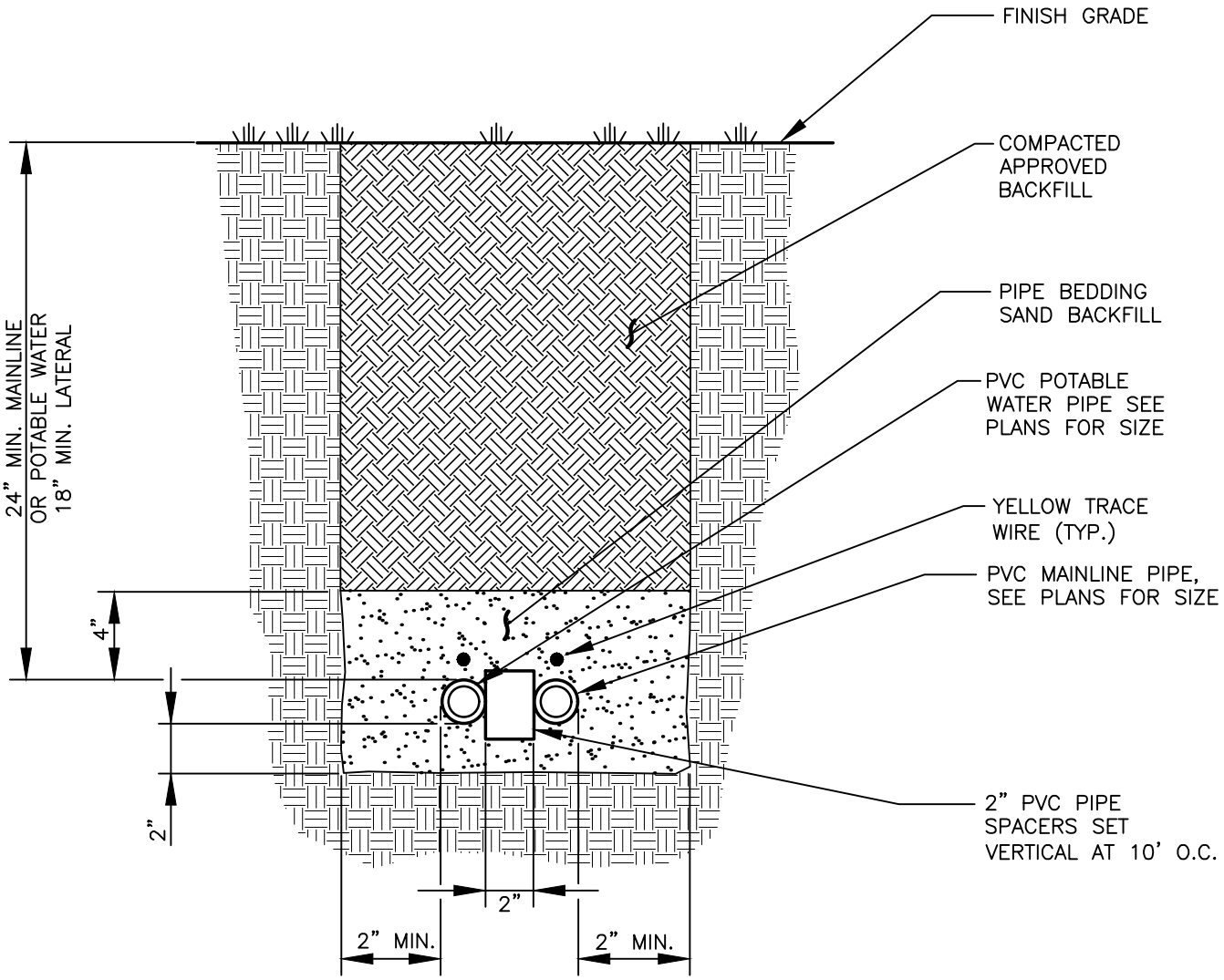

NOTE:

1. PROVIDE A 48" COIL OF TRACE WIRE IN EACH VALVE BOX.

REV NO.	DATE	BY	APPR
1	2/07	RAW	MHA
2	8/08	RAW	MHA
3	7/14	RAW	MHA
4	9/21	RAW	MHA

PUBLIC WORKS – STREETS AND TRANSPORTATION

APPROVED BY: M H Abdalla
ENGINEER MANAGER

APPROVED DATE: 9/1/2021

CITY OF Vancouver WASHINGTON

IRRIGATION TRENCHING DETAIL

STANDARD PLAN NUMBER

T03–04

I:\CITYAPPS\AUTOCAD\STD_DETAILS\DRAWING_FILES\T03-04

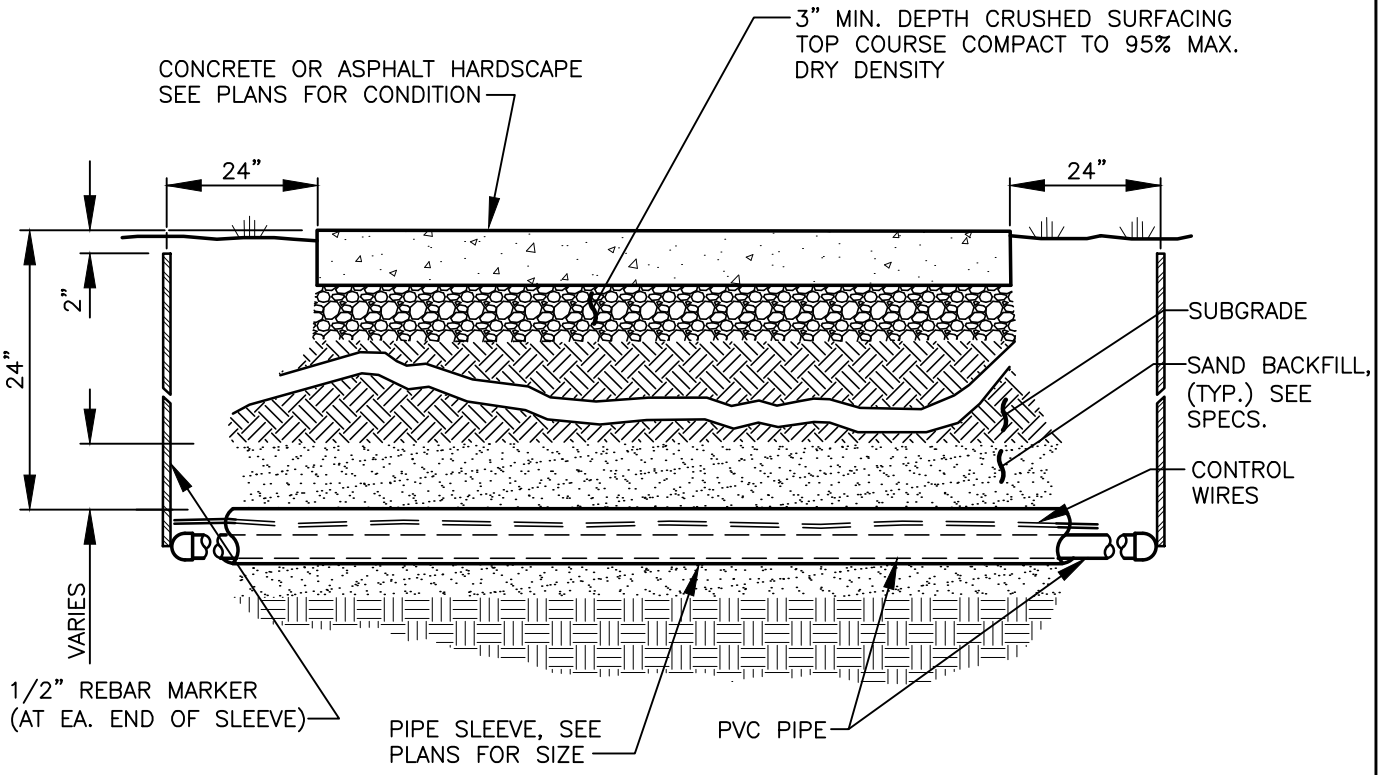

NOTE:

1. PROVIDE TRACER WIRE AT ALL PIPE SLEEVING.

REV NO.	DATE	BY	APPR
1	2/07	RAW	MHA
2	8/08	RAW	MHA
3	7/14	RAW	MHA
4	4/18	RAW	MHA
5	9/21	RAW	MHA

PUBLIC WORKS – STREETS AND TRANSPORTATION

APPROVED BY: M H Abdalla
ENGINEER MANAGER

APPROVED DATE: 9/1/2021

CITY OF Vancouver WASHINGTON

IRRIGATION PIPE SLEEVE DETAIL

STANDARD PLAN NUMBER

T03–05

I:\CITYAPPS\AUTOCAD\STD_DETAILS\DRAWING_FILES\T03-05

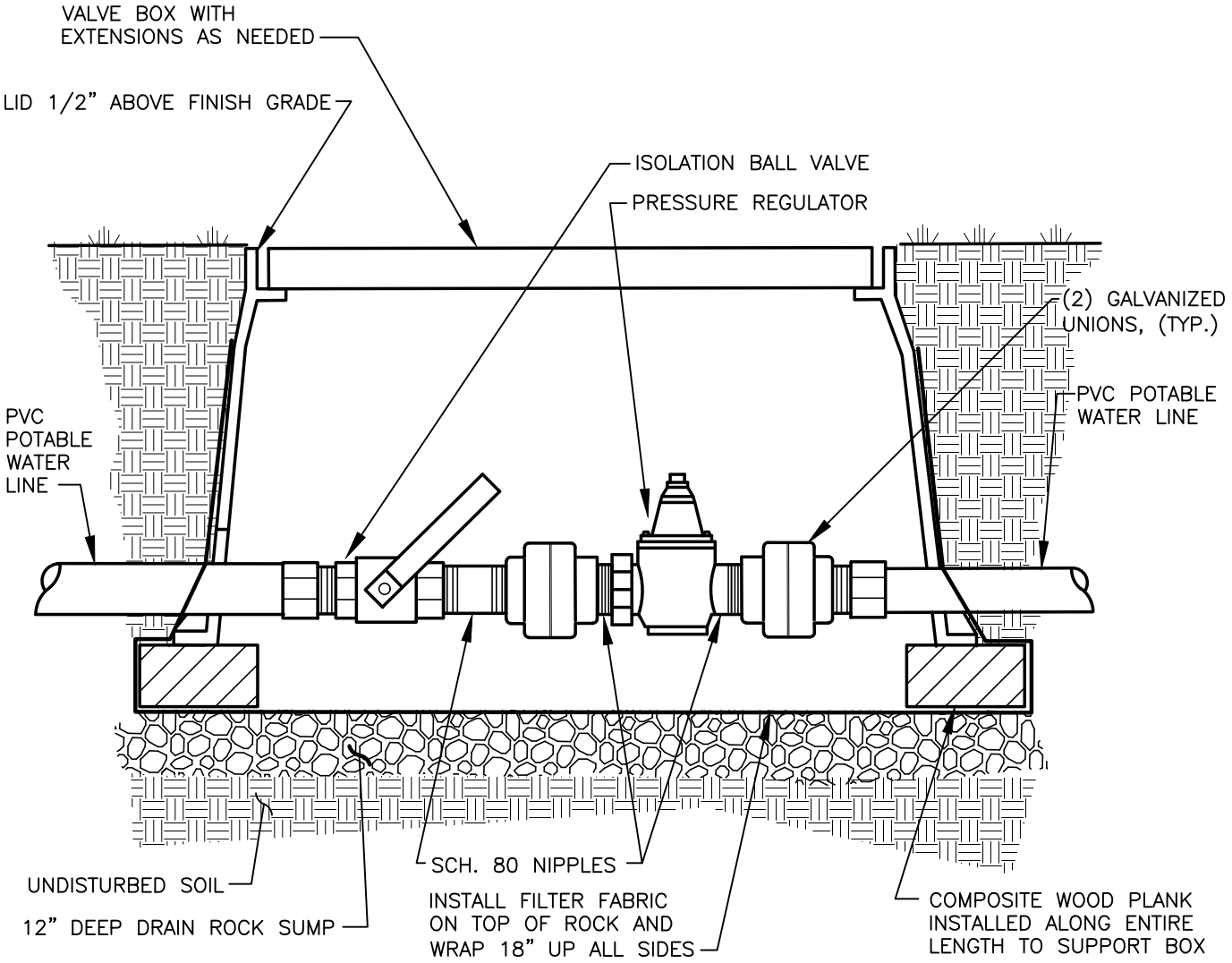

NOTE:

1. ADJUST NIPPLE LENGTHS TO ACCOMMODATE ALL EQUIPMENT INSIDE SINGLE VALVE BOX.

REV NO.	DATE	BY	APPR
1	2/07	RAW	MHA
2	8/08	RAW	MHA
3	7/14	RAW	MHA
4	9/21	RAW	MHA

PUBLIC WORKS – STREETS AND TRANSPORTATION

APPROVED BY: M H Abdalla
ENGINEER MANAGER

APPROVED DATE: 9/1/2021

CITY OF Vancouver WASHINGTON

PRESSURE REGULATOR FOR DRINKING FOUNTAIN

STANDARD PLAN NUMBER

T03–06

I:\CITYAPPS\AUTOCAD\STD_DETAILS\DRAWING_FILES\T03-06

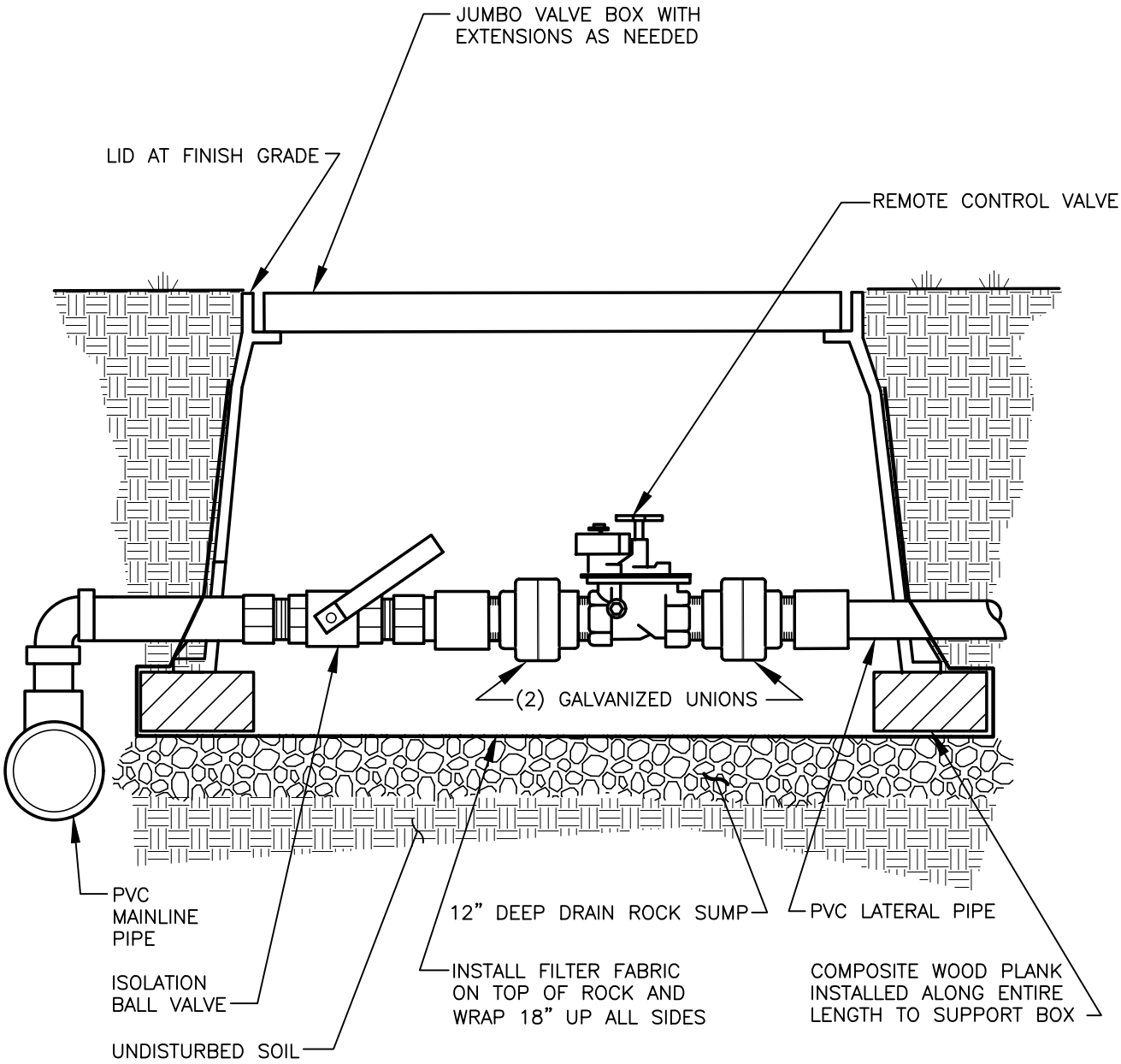

REV NO.	DATE	BY	APPR
1	2/07	RAW	MHA
2	8/08	RAW	MHA
3	7/14	RAW	MHA
4	9/21	RAW	MHA

PUBLIC WORKS – STREETS AND TRANSPORTATION

APPROVED BY: M H Abdalla
ENGINEER MANAGER

APPROVED DATE: 9/1/2021

CITY OF Vancouver WASHINGTON

AUTOMATIC CONTROL VALVE

STANDARD PLAN NUMBER

T03–07

I:\CITYAPPS\AUTOCAD\STD_DETAILS\DRAWING_FILES\T03-07

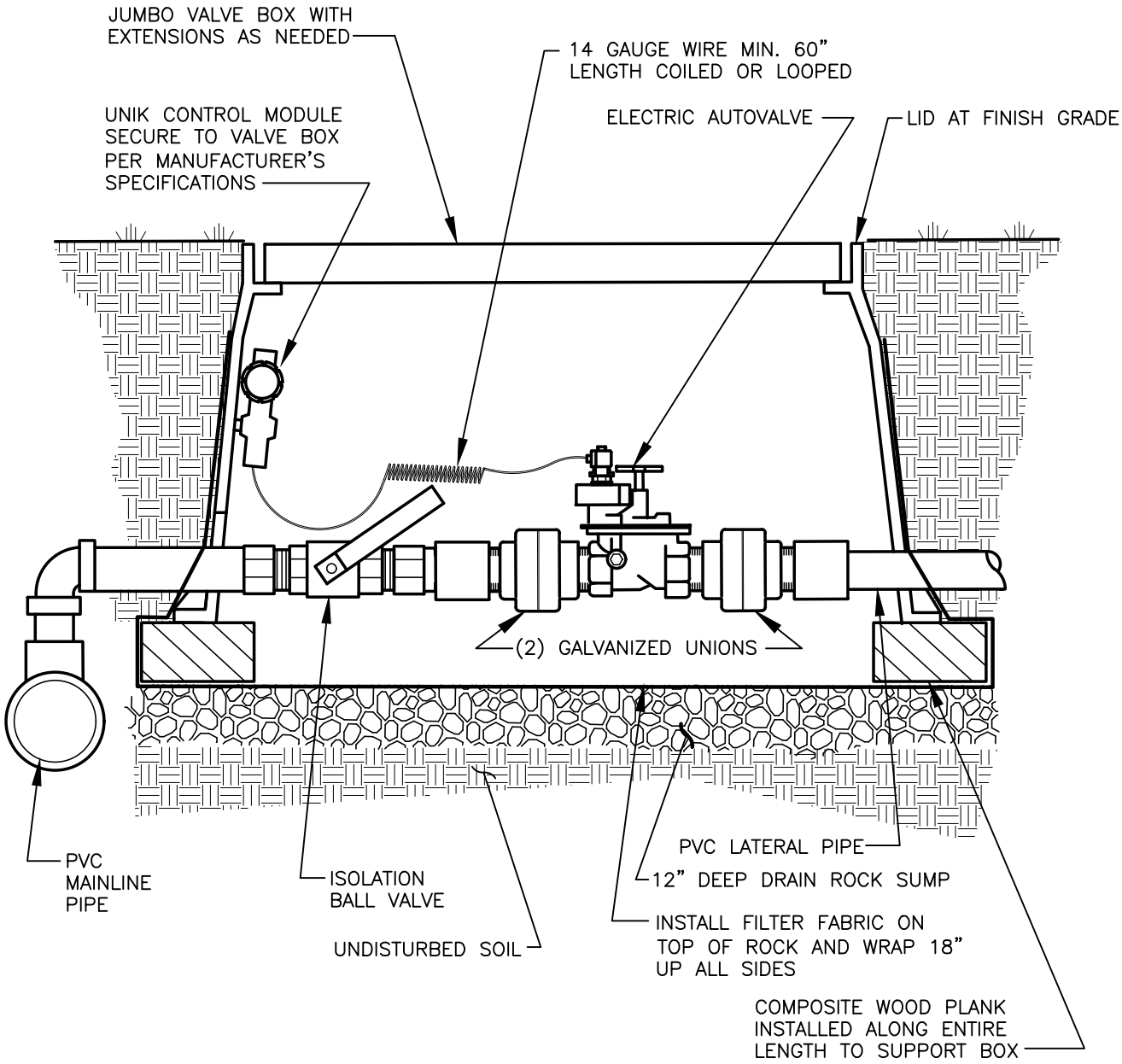

REV NO.	DATE	BY	APPR
1	2/07	RAW	MHA
2	8/08	RAW	MHA
3	7/14	RAW	MHA
4	9/21	RAW	MHA

PUBLIC WORKS – STREETS AND TRANSPORTATION

APPROVED BY: M H Abdalla
ENGINEER MANAGER

APPROVED DATE: 9/1/2021

CITY OF Vancouver WASHINGTON

AUTOMATIC CONTROLLER VALVE WITH UNIK CONTROL MODULE

STANDARD PLAN NUMBER

T03–08

I:\CITYAPPS\AUTOCAD\STD_DETAILS\DRAWING_FILES\T03-08

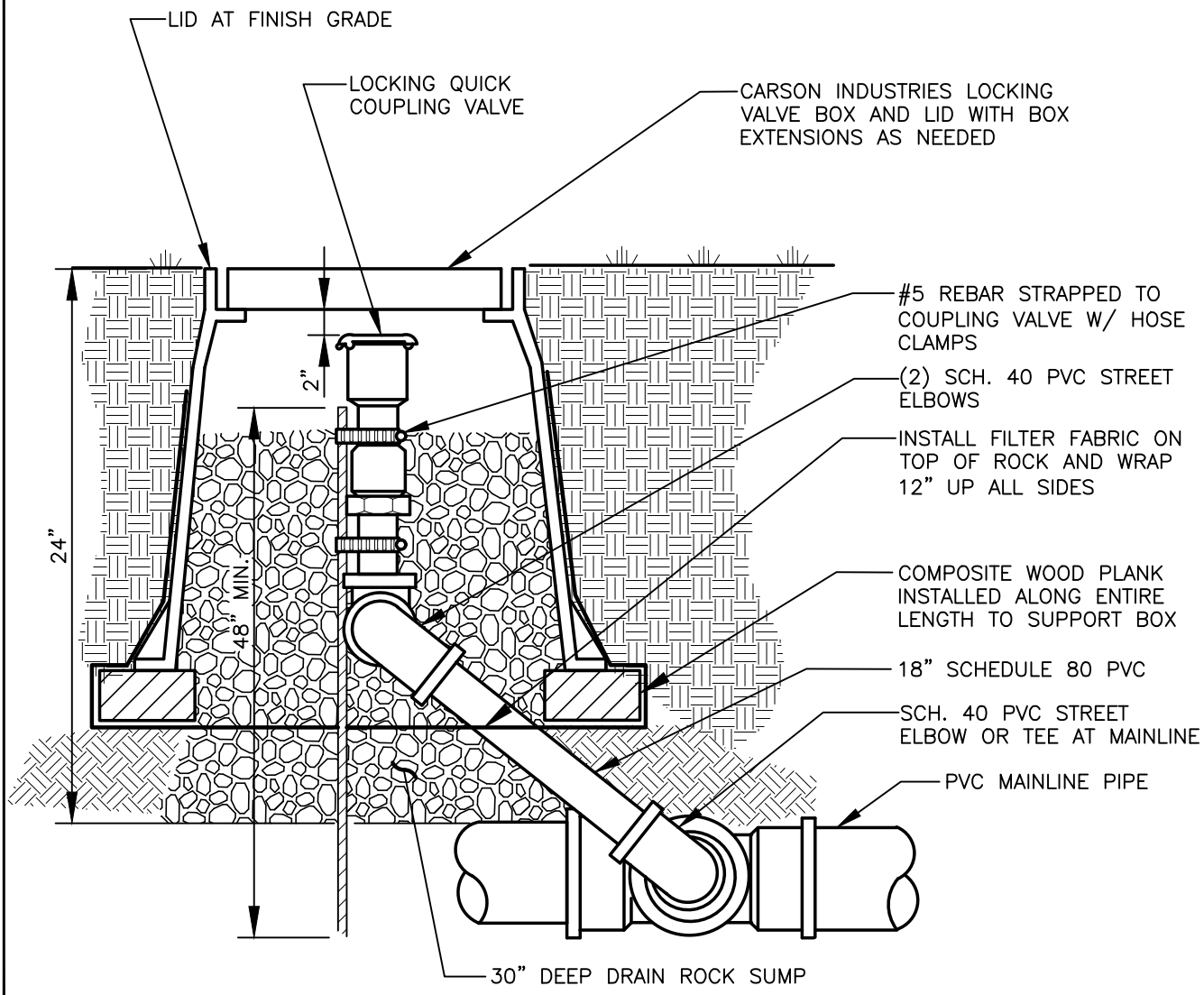

NOTES:

1. WRAP ALL THREADED FITTINGS W/ 5 WRAPS OF TEFLON TAPE.
2. SWING JOINT SIZE SHALL BE SAME SIZE AS VALVE BOTTOM INLET.

I:\CITYAPPS\AUTOCAD\STD_DETAILS\DRAWING_FILES\T03-09

REV NO.	DATE	BY	APPR
1	2/07	RAW	MHA
2	8/08	RAW	MHA
3	7/14	RAW	MHA
4	9/21	RAW	MHA

PUBLIC WORKS – STREETS AND TRANSPORTATION

APPROVED BY: M H Abdalla
ENGINEER MANAGER

APPROVED DATE: 9/1/2021

CITY OF Vancouver WASHINGTON

QUICK COUPLING VALVE

STANDARD PLAN NUMBER

T03–09

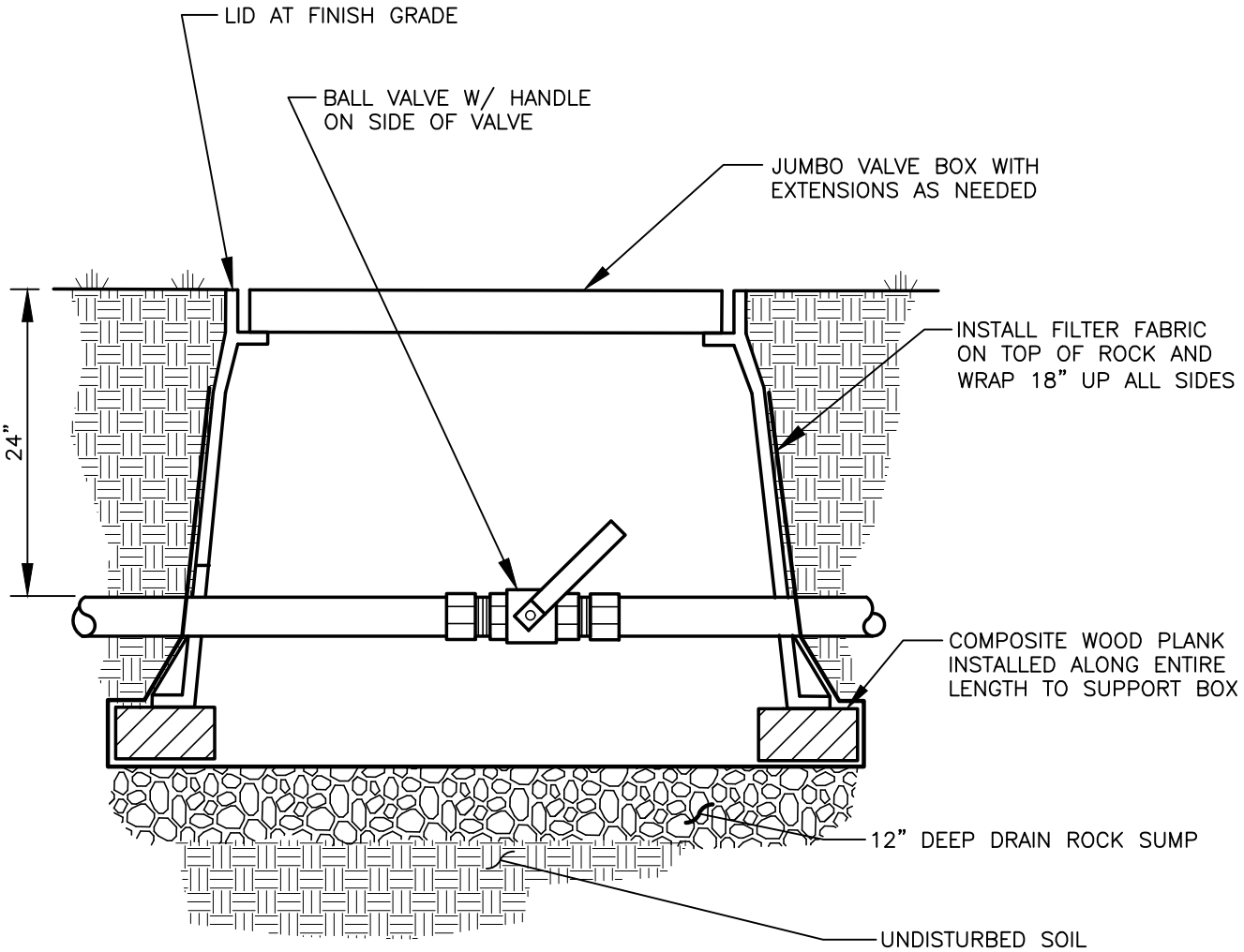

REV NO.	DATE	BY	APPR
1	2/07	RAW	MHA
2	8/08	RAW	MHA
3	7/14	RAW	MHA
4	9/21	RAW	MHA

PUBLIC WORKS – STREETS AND TRANSPORTATION

APPROVED BY: M H Abdalla
ENGINEER MANAGER

APPROVED DATE: 9/1/2021

CITY OF Vancouver WASHINGTON

ISOLATION BALL VALVE

STANDARD PLAN NUMBER

T03–10

I:\CITYAPPS\AUTOCAD\STD_DETAILS\DRAWING_FILES\T03-10

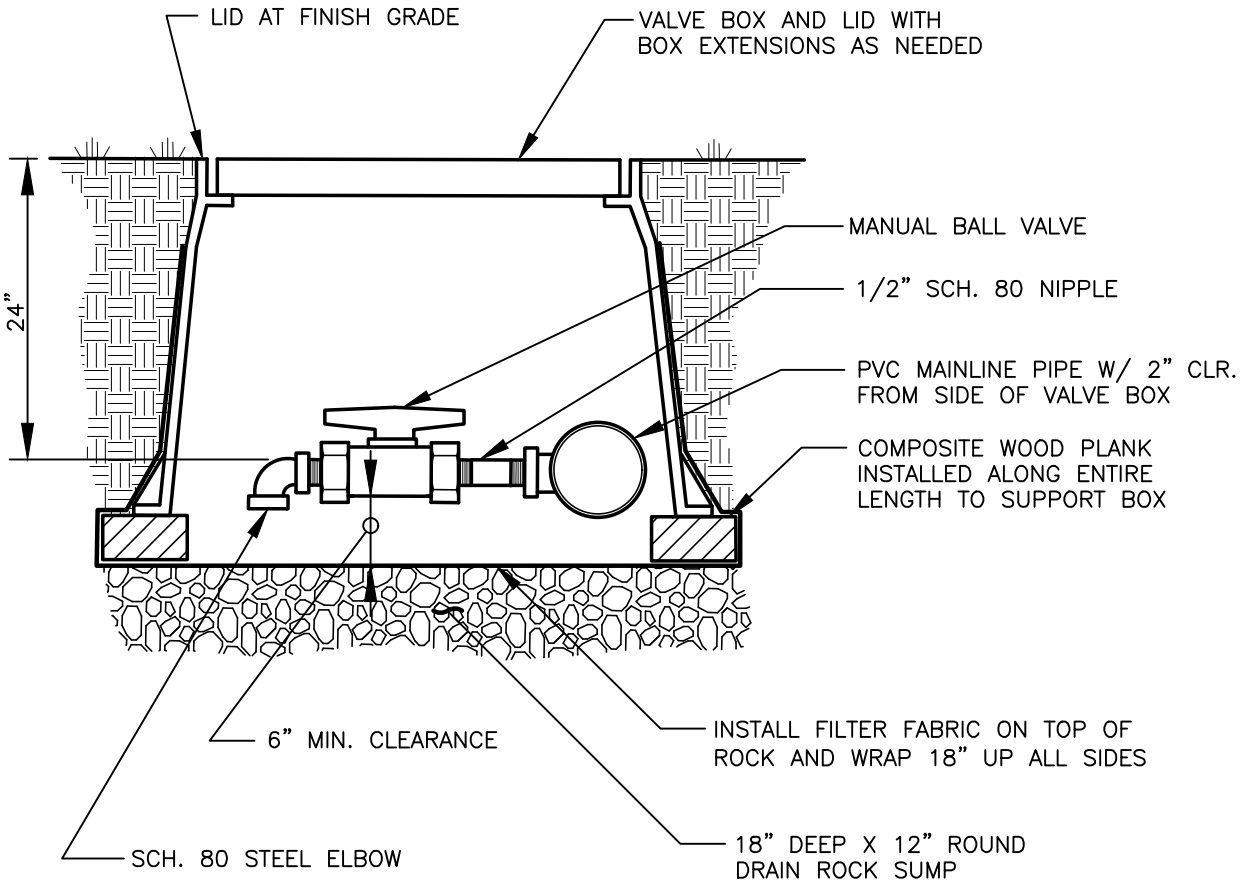

NOTES:

1. CONTRACTOR RESPONSIBLE FOR LOCATING DRAIN VALVE AT LOWEST POINT OF MAINLINE TO ENSURE POSITIVE DRAINAGE.

2. ALLOW FOR 1" CLEARANCE FROM HOLE IN BOX TO TOP OF PIPE.

REV NO.	DATE	BY	APPR
1	2/07	RAW	MHA
2	8/08	RAW	MHA
3	7/14	RAW	MHA
4	9/21	RAW	MHA

PUBLIC WORKS – STREETS AND TRANSPORTATION

APPROVED BY: M H Abdalla
ENGINEER MANAGER

APPROVED DATE: 9/1/2021

CITY OF Vancouver WASHINGTON

MANUAL DRAIN VALVE

STANDARD PLAN NUMBER

T03–11

I:\CITYAPPS\AUTOCAD\STD_DETAILS\DRAWING_FILES\T03-11

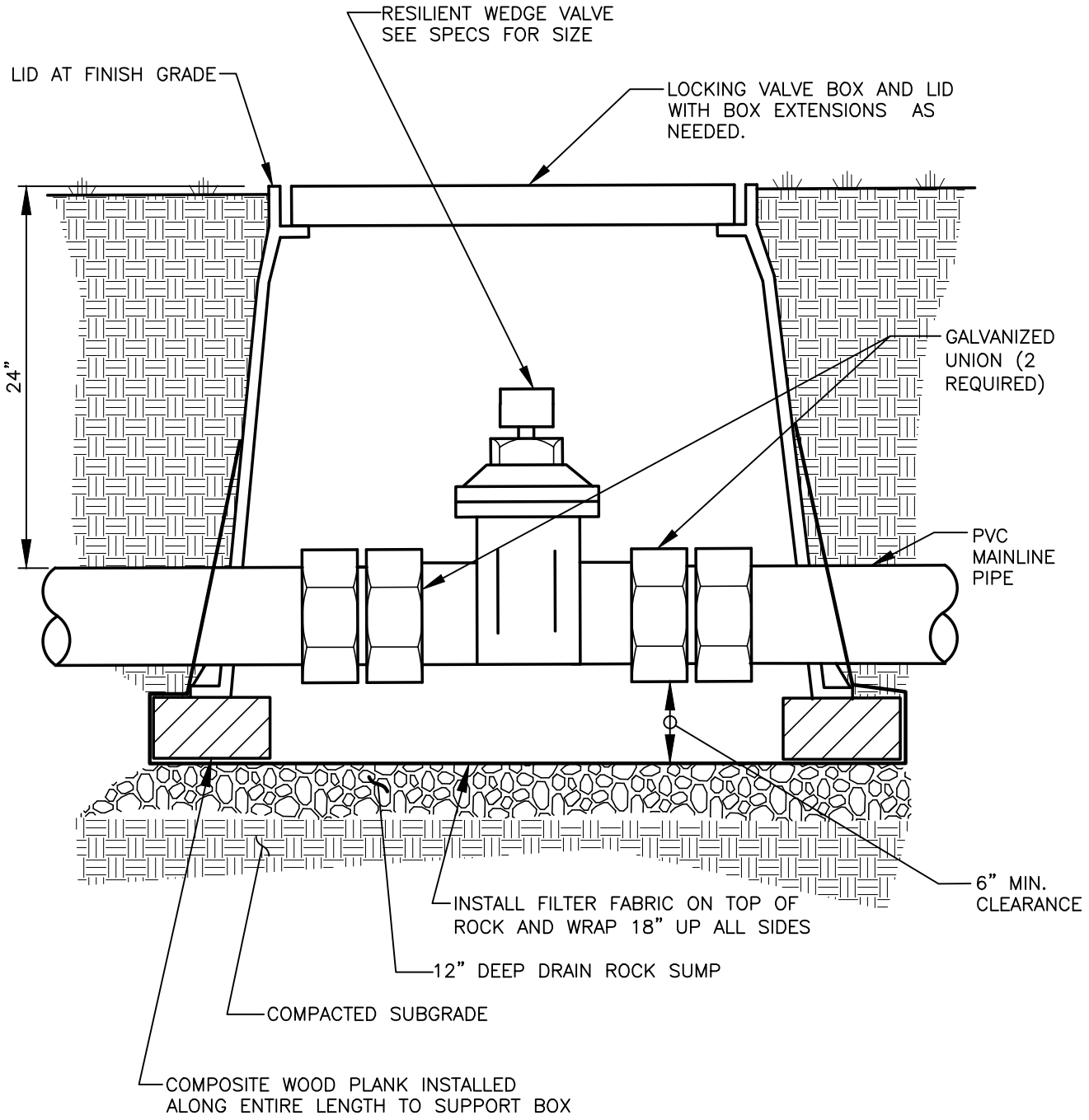

REV NO.	DATE	BY	APPR
1	2/07	RAW	MHA
2	8/08	RAW	MHA
3	7/14	RAW	MHA
4	9/21	RAW	MHA

PUBLIC WORKS – STREETS AND TRANSPORTATION

APPROVED BY: M H Abdalla
ENGINEER MANAGER

APPROVED DATE: 9/1/2021

CITY OF Vancouver WASHINGTON

MANUAL WEDGE GATE VALVE

STANDARD PLAN NUMBER

T03–12

I:\CITYAPPS\AUTOCAD\STD_DETAILS\DRAWING_FILES\T03-12

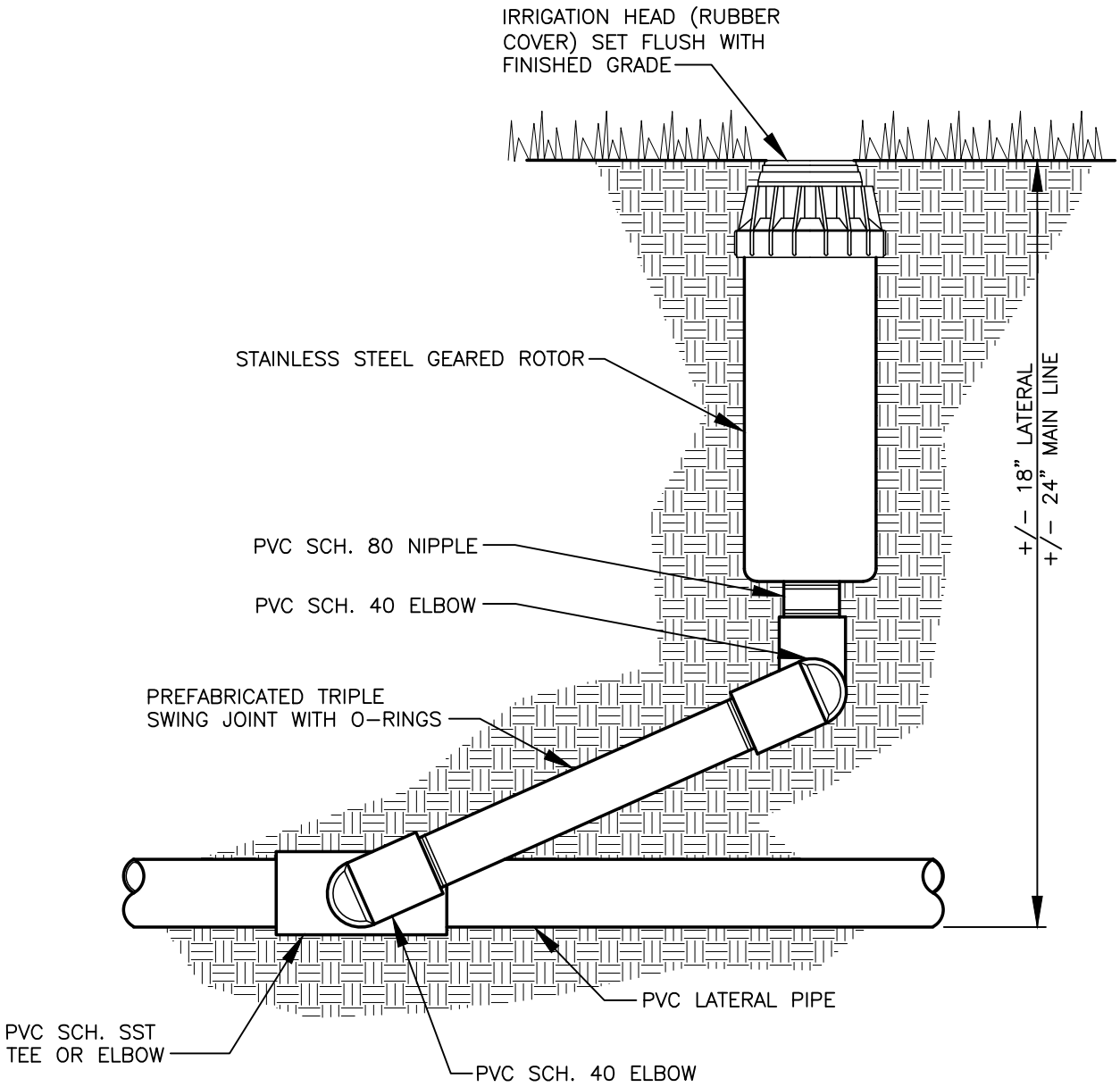

NOTES:

1. WRAP ALL THREADED FITTINGS WITH TEFLON TAPE.
2. MINIMUM SWING JOINT SIZE SHALL BE HEAD BOTH INLET SIZE.
3. WHEN SPRAY HEADS ARE RUNNING ALONG SIDEWALK OR CURBS, HEADS SHOULD BE 3" AWAY AND PIPES 6" OR MORE AWAY.

REV NO.	DATE	BY	APPR
1	2/07	RAW	MHA
2	8/08	RAW	MHA
3	7/14	RAW	MHA
4	9/21	RAW	MHA

PUBLIC WORKS – STREETS AND TRANSPORTATION

APPROVED BY: M H Abdalla
ENGINEER MANAGER
APPROVED DATE: 9/1/2021

CITY OF Vancouver WASHINGTON

ROTARY SPRAY HEAD

STANDARD PLAN NUMBER
T03–14

I:\CITYAPPS\AUTOCAD\STD_DETAILS\DRAWING_FILES\T03-14

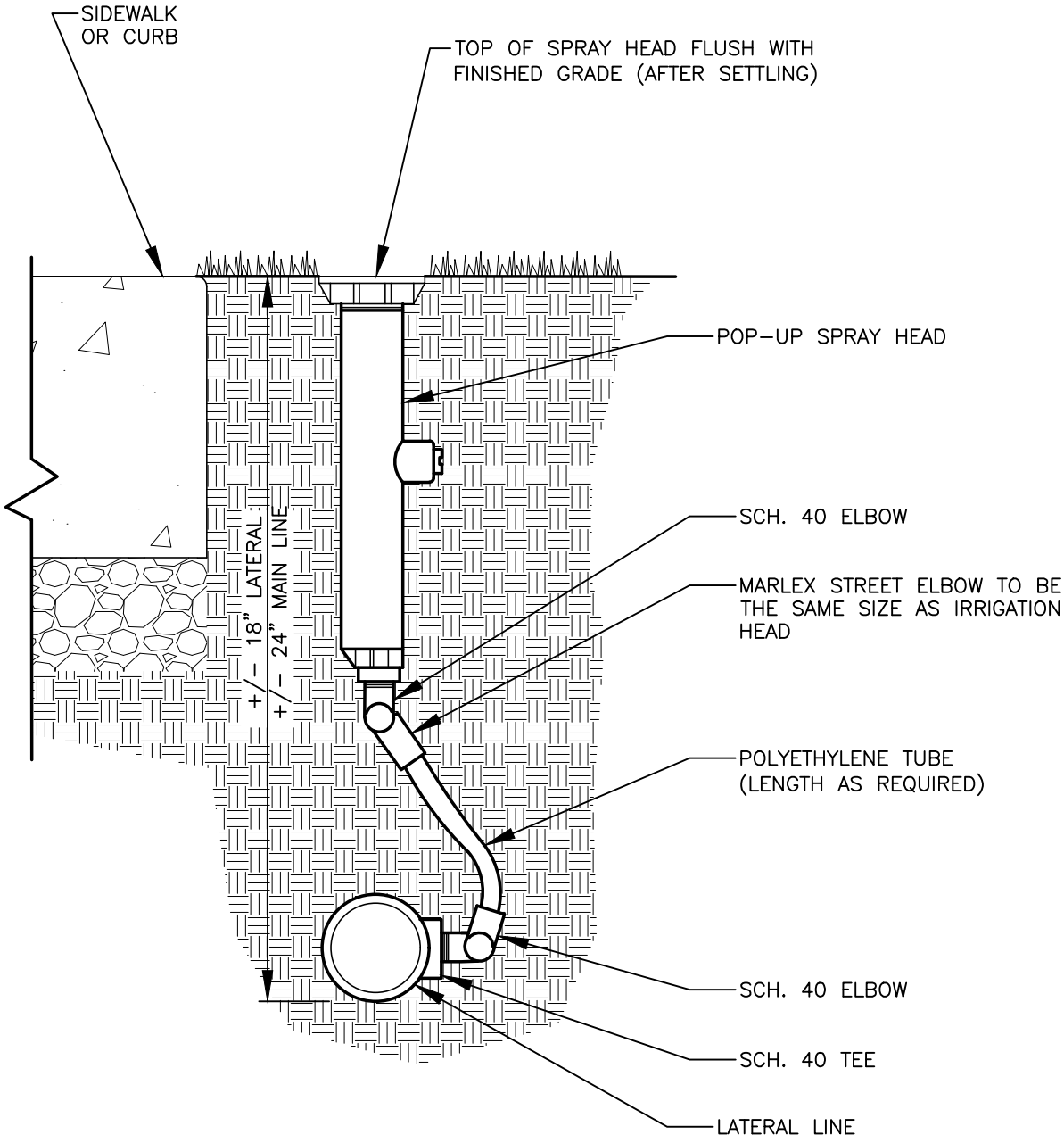

NOTES:

1. WRAP ALL THREADED FITTINGS WITH TEFLON TAPE.
2. MINIMUM SWING JOINT SIZE SHALL BE HEAD BOTH INLET SIZE.
3. WHEN SPRAY HEADS ARE RUNNING ALONG SIDEWALK OR CURBS, HEADS SHOULD BE 3" AWAY AND PIPES 6" OR MORE AWAY.

REV NO.	DATE	BY	APPR
1	2/07	RAW	MHA
2	8/08	RAW	MHA
3	7/14	RAW	MHA
4	9/21	RAW	MHA

PUBLIC WORKS – STREETS AND TRANSPORTATION

APPROVED BY: M H Abdalla
ENGINEER MANAGER
APPROVED DATE: 9/1/2021

CITY OF Vancouver WASHINGTON

POP-UP SPRAY HEAD

STANDARD PLAN NUMBER T03-15

I:\CITYAPPS\AUTOCAD\STD_DETAILS\DRAWING_FILES\T03-15

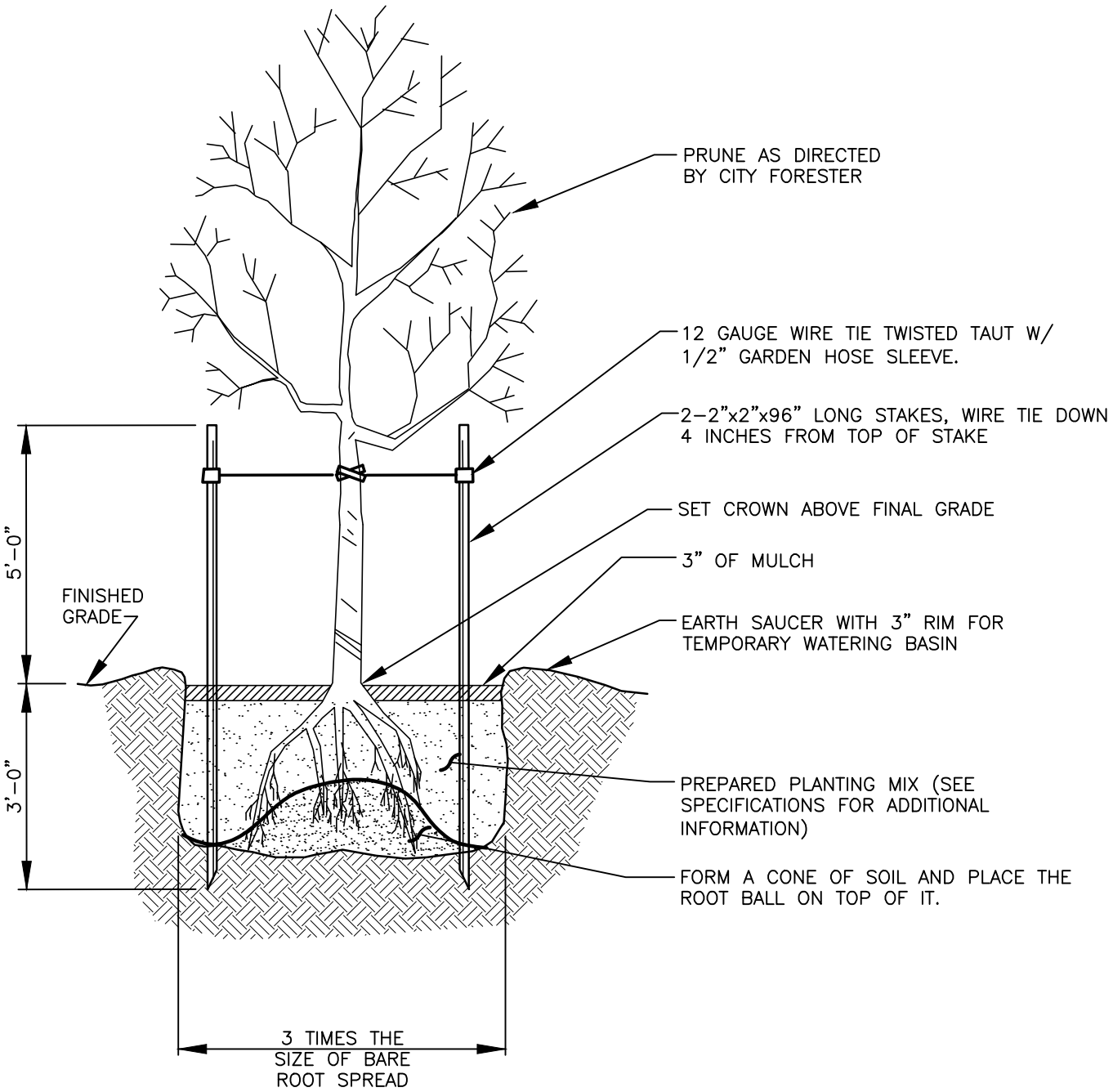

NOTES:

1. FOR TREE SPACING, TYPES AND CALIPER, SEE VMC 20.925.060.
2. A ROOT BARRIER SHOULD BE INSTALLED AT THE EDGE OF PAVEMENT OR 4 FEET WIDE AND 6 FEET WIDE RECTANGLE AROUND THE TREE.

REV NO.	DATE	BY	APPR
1	2/07	RAW	MHA
2	8/08	RAW	MHA
3	7/14	RAW	MHA
4	2/21	OIS	MHA
5	9/21	RAW	MHA

PUBLIC WORKS – STREETS AND TRANSPORTATION

APPROVED BY: M H Abdalla
ENGINEER MANAGER
APPROVED DATE: 9/1/2021

CITY OF Vancouver WASHINGTON

BARE ROOT PLANTING

STANDARD PLAN NUMBER
T03-16A

I:\CITYAPPS\AUTOCAD\STD_DETAILS\DRAWING_FILES\T03-16A

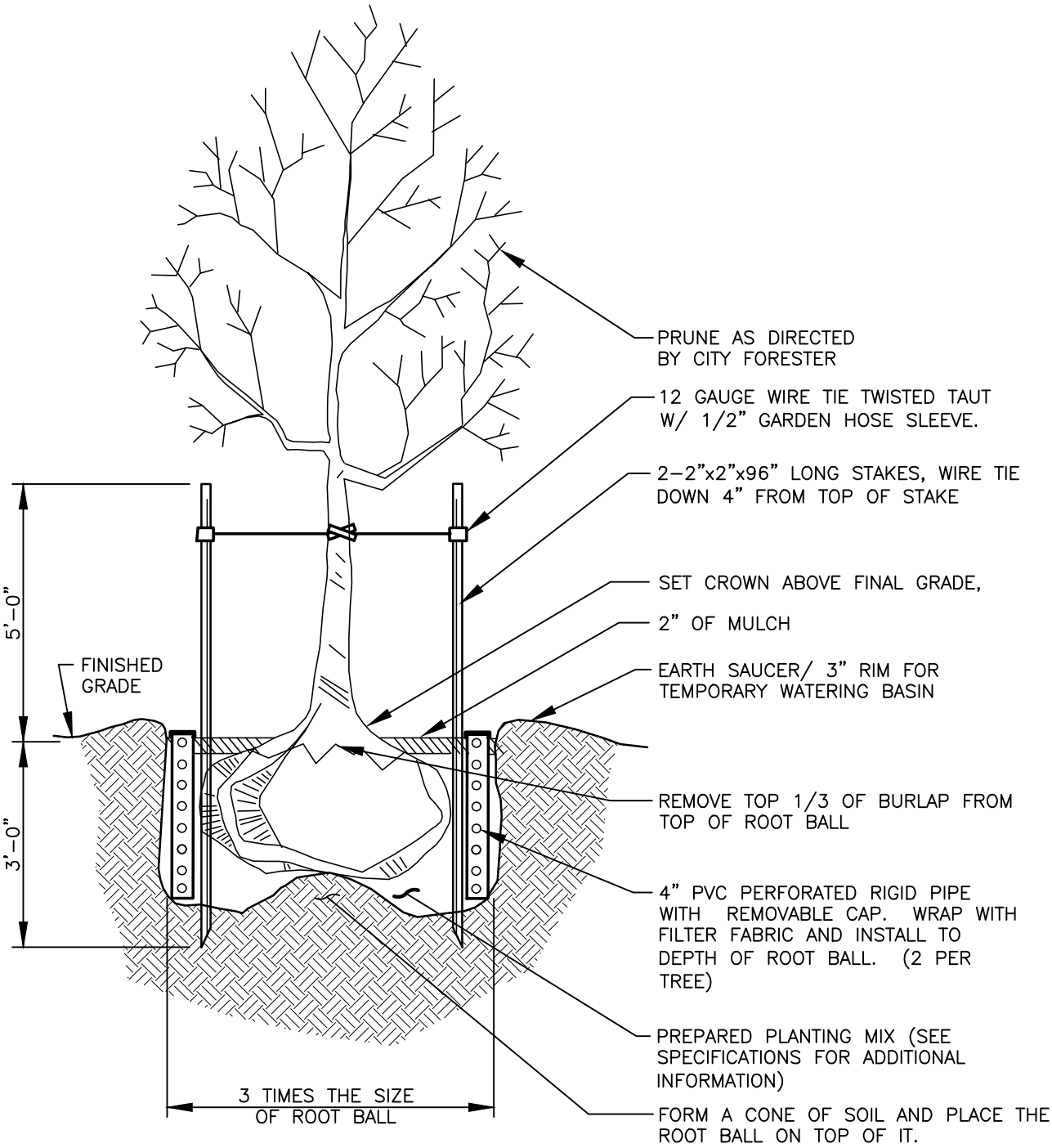

NOTES:

1. FOR TREE SPACING, TYPES AND CALIPER, SEE VMC 20.925.060.
2. A ROOT BARRIER SHOULD BE INSTALLED AT THE EDGE OF PAVEMENT OR 4 FEET WIDE AND 6 FEET WIDE RECTANGLE AROUND THE TREE.

REV NO.	DATE	BY	APPR
1	2/21	OIS	MHA
2	9/21	RAW	MHA

PUBLIC WORKS – STREETS AND TRANSPORTATION

APPROVED BY: M H Abdalla
ENGINEER MANAGER
APPROVED DATE: 9/1/2021

CITY OF Vancouver WASHINGTON

TREE PLANTING PERFORATED PIPE INSTALLATION

STANDARD PLAN NUMBER

T03–16B

I:\CITYAPPS\AUTOCAD\STD_DETAILS\DRAWING_FILES\T03-16B

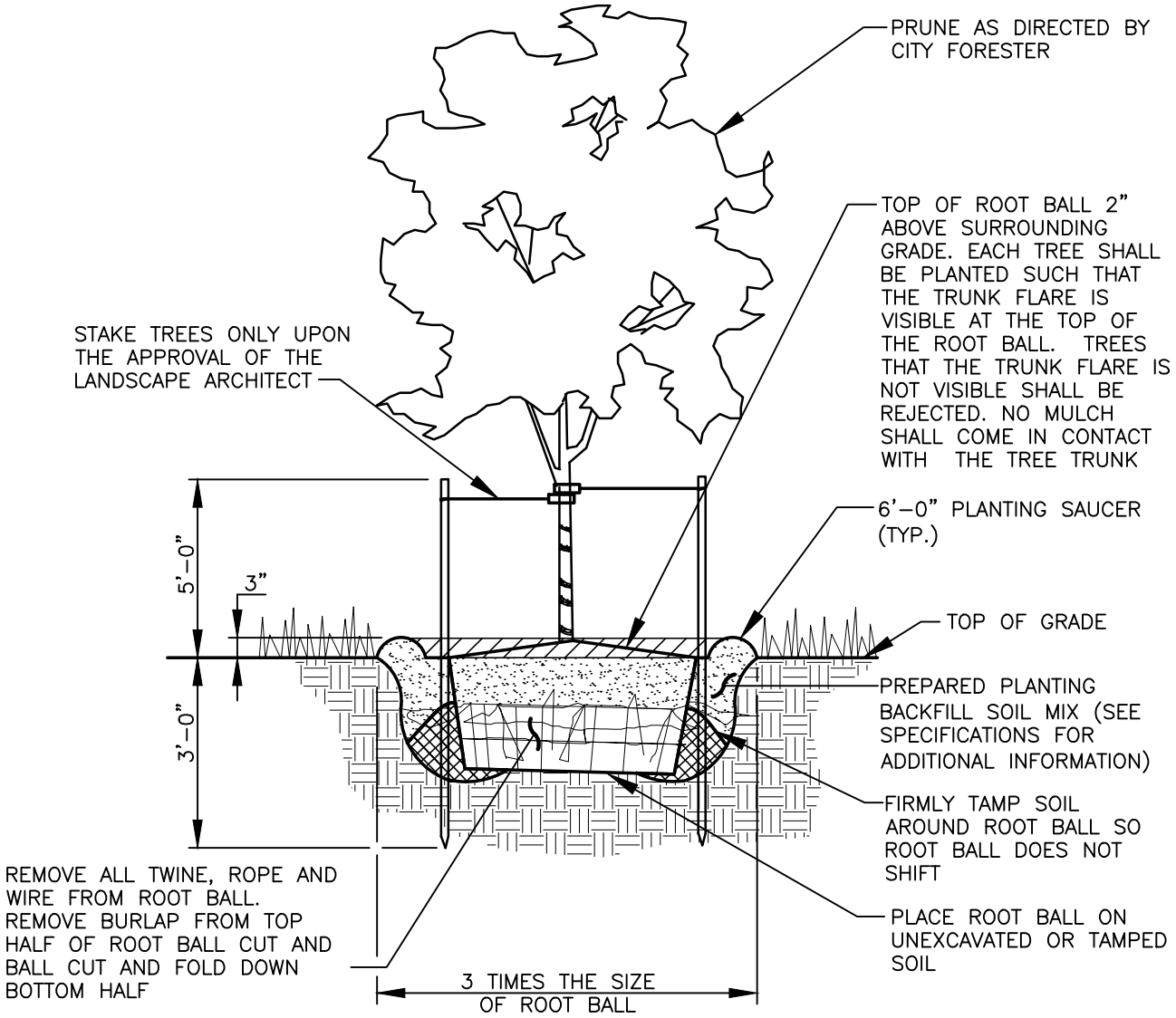

NOTES:

1. FOR TREE SPACING, TYPES AND CALIPER, SEE VMC 20.925.060.
2. A ROOT BARRIER SHOULD BE INSTALLED AT THE EDGE OF PAVEMENT OR 4 FEET WIDE AND 6 FEET WIDE RECTANGLE AROUND THE TREE.
3. SCARIFY BOTTOM AND SIDES OF HOLE PRIOR TO PLANTING.

REV NO.	DATE	BY	APPR
1	2/21	OIS	MHA
2	9/21	RAW	MHA

PUBLIC WORKS – STREETS AND TRANSPORTATION

APPROVED BY: M H Abdalla
ENGINEER MANAGER
APPROVED DATE: 9/1/2021

CITY OF Vancouver WASHINGTON

DECIDUOUS BALLED/ BURLAP TREE PLANTING

STANDARD PLAN NUMBER T03-16C

I:\CITYAPPS\AUTOCAD\STD_DETAILS\DRAWING_FILES\T03-16C

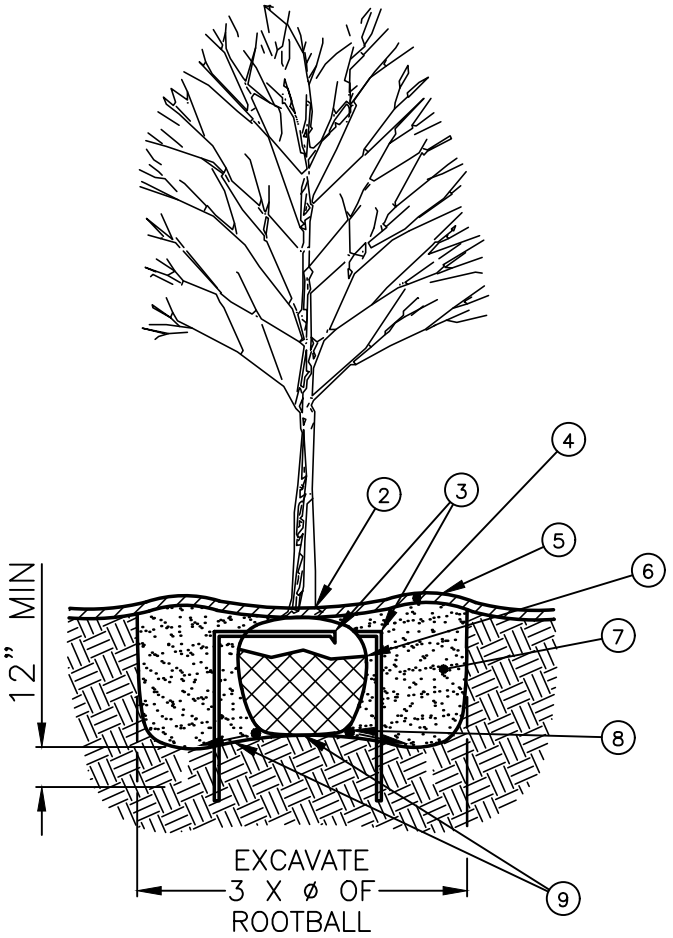

BROADLEAF TREE DETAIL – STAPLED

NOTES:

1. AFTER PLANTING AND THOROUGHLY WATERING, APPLY ANTI–DESICCANT SPRAY IF TREE IS IN LEAF.
2. INSTALL TRUNK GROWTH BASE AT 1" ABOVE FINISH GRADE
3. TREE STAPLES, INSTALL 2 PER TREE FOR 2" CAL. & SMALLER TREES & 3 PER TREE FOR LARGER TREES OR IN HIGH WIND LOCATIONS
4. 3" DEPTH BARK MULCH OVER COMPOST LAYER IN LAWN AREAS, INSTALL 3' ø BARK MULCH RING
5. CONSTRUCT A 3" WATERING BASIN USING SOIL
6. REMOVE BURLAP FROM TOP 1/2 OF ROOTBALL. REMOVE ANY NON–BIOGRADABLE MATERIAL
7. BACKFILL: 100% EXTG SOIL FROM HOLE SCARIFY SIDES OF HOLE BEFORE BACKFILLING
8. TEA BAG TYPE FERTILIZER PACKETS, 20–10–15 W/ MINORS FOLLOW MANUFACTURERS INSTRUCTIONS FOR PLACEMENT; INSTALL 6 PER TREE CALIPER INCH JR SIMPLOT BEST PAKS, OR APPROVE EQUAL
9. DO NOT OVER–EXCAVATE DIRECTLY UNDER ROOTBALL LOOSEN SOIL NEXT TO ROOTBALL AND SLOPE BOTTOM OF HOLE AWAY FROM ROOTBALL FOR DRAINAGE

REV NO.	DATE	BY	APPR
1	2/21	OIS	MHA
2	9/221	RAW	MHA

PUBLIC WORKS – STREETS AND TRANSPORTATION

APPROVED BY: M H Abdalla
ENGINEER MANAGER
APPROVED DATE: 9/1/2021

CITY OF Vancouver WASHINGTON

BROADLEAF BALLED/ BURLAP TREE PLANTING

STANDARD PLAN NUMBER
T03–16D

I:\CITYAPPS\AUTOCAD\STD_DETAILS\DRAWING_FILES\T03-16D

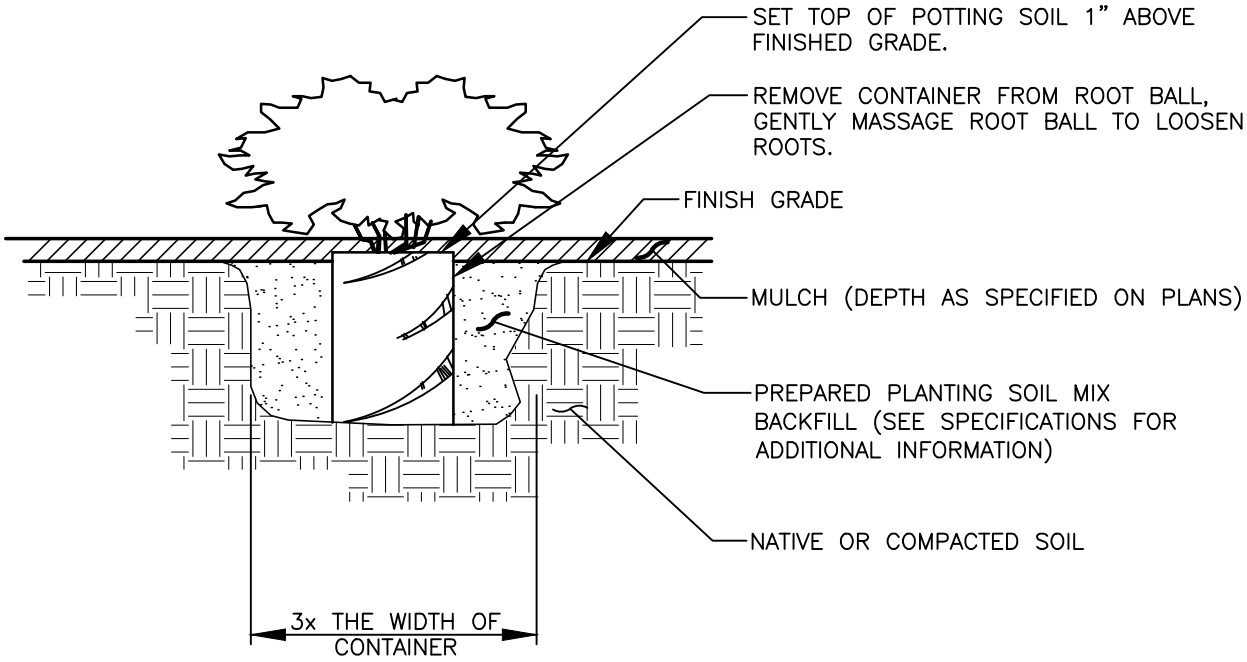

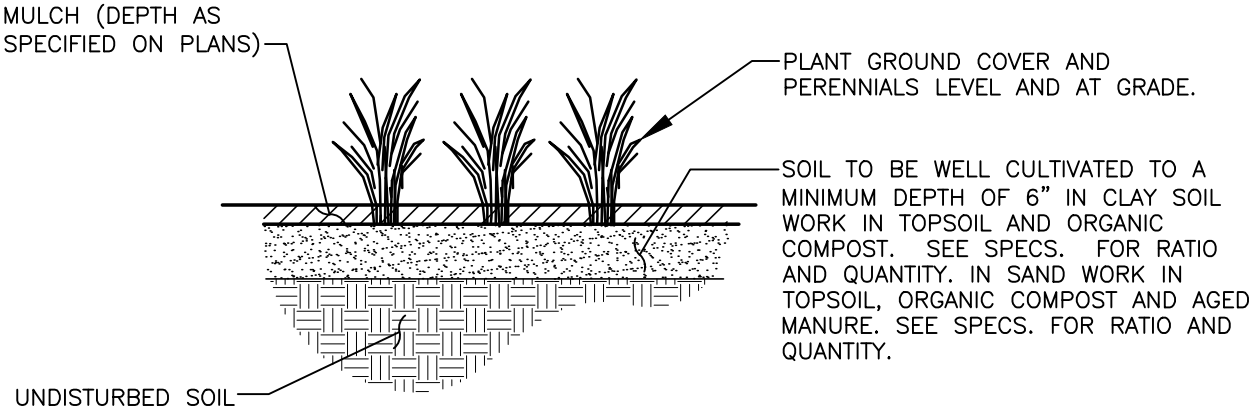

NOTE:

1. SCARIFY BOTTOM AND SIDES OF HOLE, PRIOR TO PLANTING.
2. KEEP PLANTS MOIST AND SHADED UNTIL PLANTING.

REV NO.	DATE	BY	APPR
1	2/07	RAW	MHA
2	8/08	RAW	MHA
3	7/14	RAW	MHA
4	9/21	RAW	MHA

PUBLIC WORKS – STREETS AND TRANSPORTATION

APPROVED BY: M H Abdalla
ENGINEER MANAGER
APPROVED DATE: 9/1/2021

CITY OF Vancouver WASHINGTON

SHRUB CONTAINER PLANTING, PERENNIAL AND GROUNDCOVER DETAILS

STANDARD PLAN NUMBER
T03–19

I:\CITYAPPS\AUTOCAD\STD_DETAILS\DRAWING_FILES\T03-19

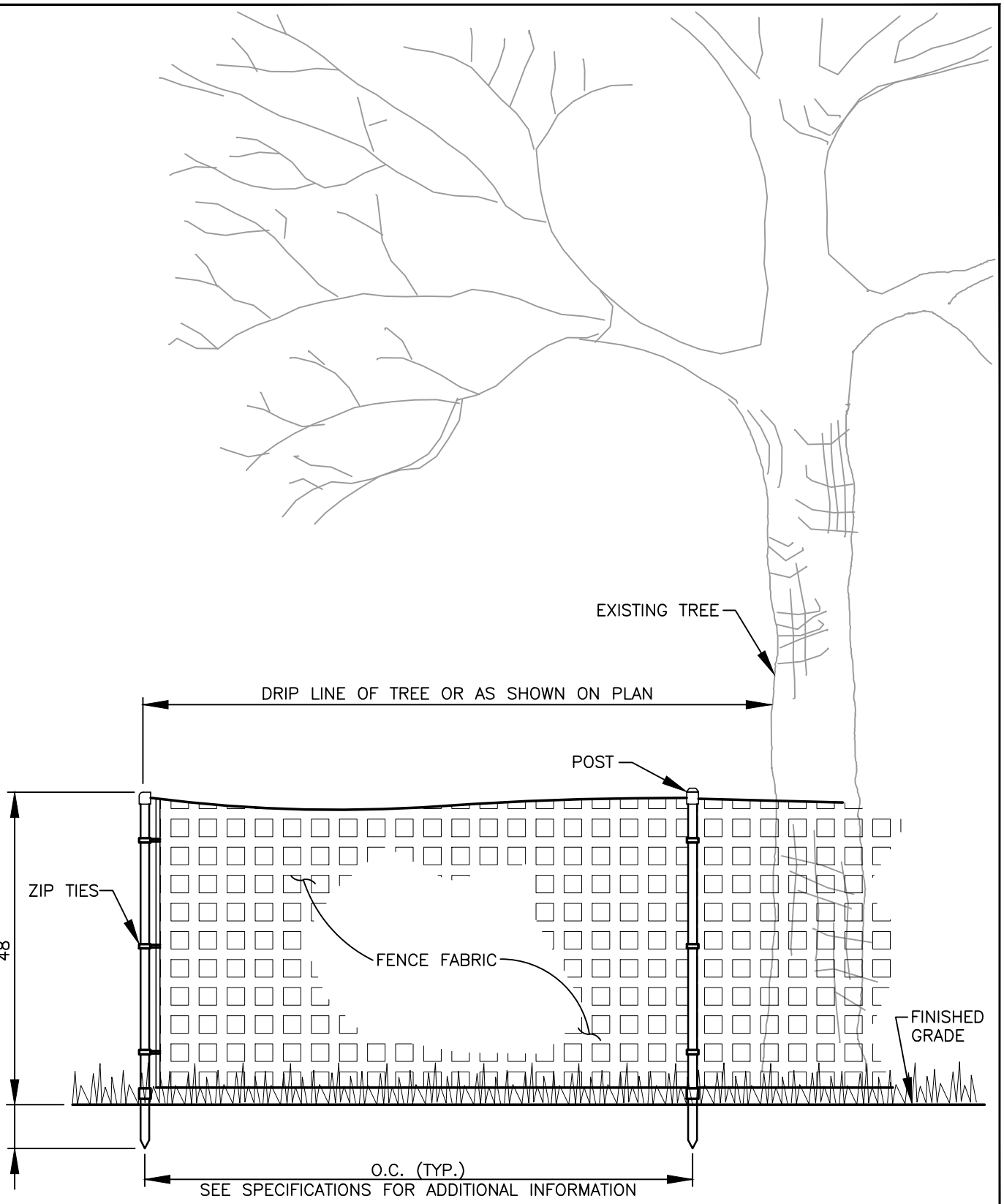

REV NO.	DATE	BY	APPR
1	2/07	RAW	MHA
2	8/08	RAW	MHA
3	7/14	RAW	MHA
4	9/21	RAW	MHA

PUBLIC WORKS – STREETS AND TRANSPORTATION

APPROVED BY: M H Abdalla
ENGINEER MANAGER

APPROVED DATE: 9/1/2021

CITY OF Vancouver WASHINGTON

TREE PROTECTION FENCE DETAIL

STANDARD PLAN NUMBER

T03–20

I:\CITYAPPS\AUTOCAD\STD_DETAILS\DRAWING_FILES\T03-20

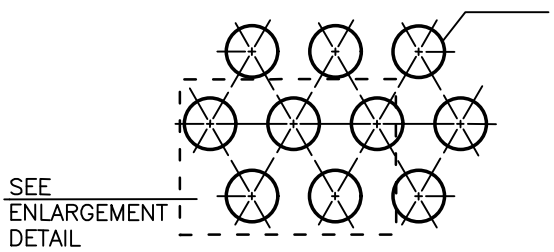

1. ALL GROUNDCOVER SHALL BE PLANTED AT EQUAL TRIANGULAR SPACING OR ON CENTER SPACING AS SPECIFIED ON PLANTING PLAN.

2. LOCATE GROUNDCOVER ONE HALF OF SPECIFIED SPACING DISTANCE FROM ANY CURB, SIDEWALK, OR OTHER HARD SURFACE, UNLESS OTHERWISE SPECIFIED.

GROUNDCOVER PLANTING DETAIL

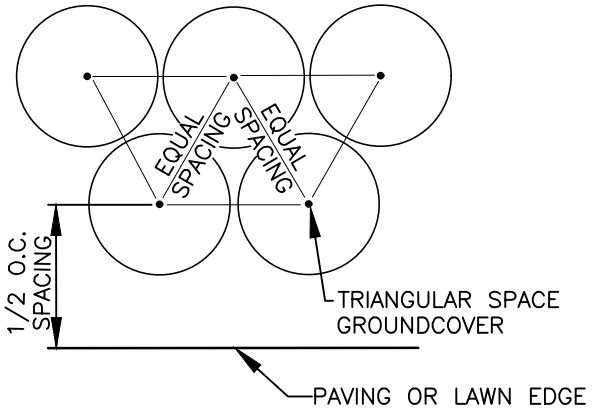

ENLARGEMENT–TRIANGULAR SPACING

REV NO.	DATE	BY	APPR
1	2/07	RAW	MHA
2	8/08	RAW	MHA
3	7/14	RAW	MHA
4	9/21	RAW	MHA

PUBLIC WORKS – STREETS AND TRANSPORTATION

APPROVED BY: M H Abdalla
ENGINEER MANAGER

APPROVED DATE: 9/1/2021

CITY OF Vancouver WASHINGTON

GROUNDCOVER PLANTING DETAIL

STANDARD PLAN NUMBER

T03–21

I:\CITYAPPS\AUTOCAD\STD_DETAILS\DRAWING_FILES\T03-21

NOTES:

1. DETERMINE THE CORRECT NUMBER OF PANELS TO BE USED. DEPENDING UPON THE ACTUAL PLANTING PLAN AND THE NUMBER OF TREES INVOLVED THE LENGTH OF LINEAR BARRIER WILL VARY, BUT AS A GENERAL RULE OF THUMB TAKE THE ANTICIPATED MATURE CANOPY DIAMETER OF THE TREE AND ADD 2 FEET (61CM). THIS WILL BE THE NUMBER OF FEET NECESSARY FOR A LINEAR STYLE PLANTING APPLICATION. (SEE CHART BELOW.)

2. CHOOSE THE BARRIER THAT BEST SUITS THE APPLICATION. GENERALLY IF A SIDEWALK, PATIO OR DRIVEWAY IS TO BE PROTECTED, 18" IS SUFFICIENT DEPTH, WITH 12" AS AN ALTERNATE CHOICE FOR NON-AGGRESSIVE, DEEPER ROOTING TREES. HOWEVER FOR CURB AND GUTTER PROTECTION OR MORE AGGRESSIVE ROOTS 24" IS GENERALLY THE BETTER CHOICE.

3. DIG THE TRENCH TO THE DEPTH BASED UPON THE PARTICULAR BARRIER CHOSEN.

4. NEXT PLACE THE BARRIER IN THE TRENCH WITH THE VERTICAL RIBS FACING TOWARD THE TREE AND ALIGN IN A STRAIGHT FASHION. IT IS HELPFUL TO PLACE THE BARRIER AGAINST THE HARDSCAPE. USE THE HARDSCAPE AS A GUIDE AND BACKFILL AGAINST THE BARRIERS TO PROMOTE A CLEAN SMOOTH FIT TO THE HARDSCAPE. BE SURE TO KEEP THE BARRIER'S DOUBLE TOP EDGE AT LEAST 1/2" ABOVE GRADE TO ENSURE ROOTS DO NOT GROW OVER THE TOP.

5. PLANT THE TREE(S). THE LINEAR STYLE OFFERS A MORE EXPANSIVE ROOTING GROWTH AREA, HOWEVER ADVERSE SOIL AND DRAINAGE CONDITIONS MAY EXIST IN THE ACTUAL PLANTING AREA. TAKE STEPS TO ENSURE HEALTHY GROWTH OF THE TREE AT PLANTING. CONSULT WITH A LOCAL ARBORIST FOR PLANTING TIPS AND RECOMMENDATIONS.

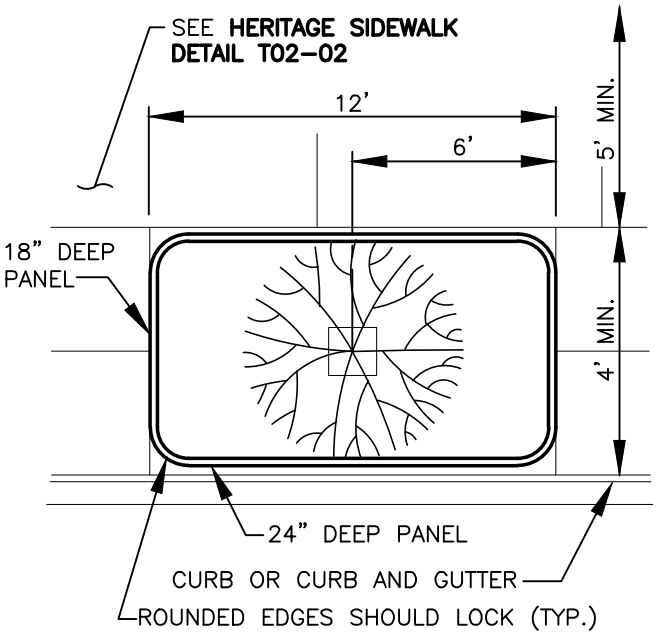

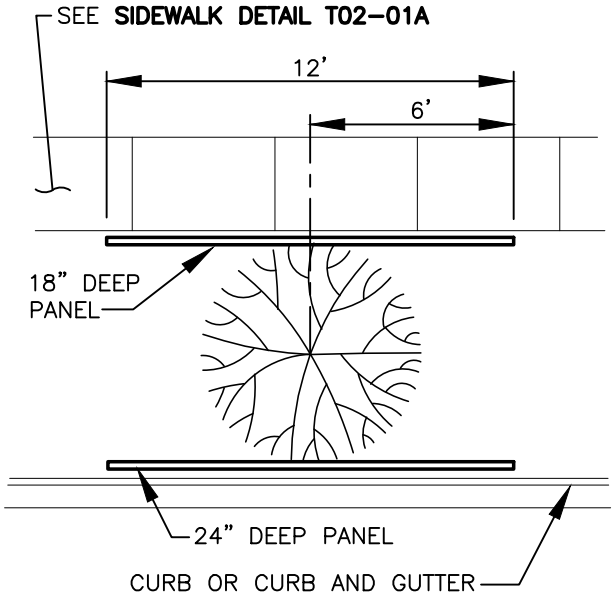

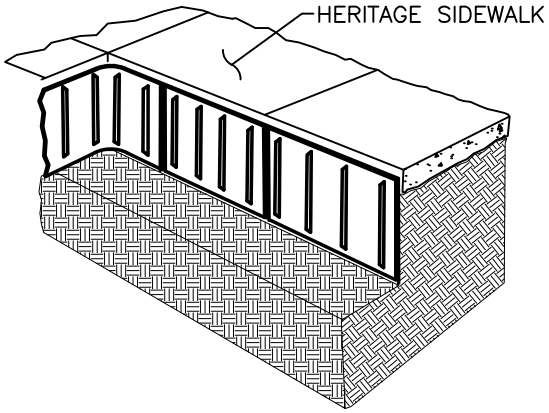

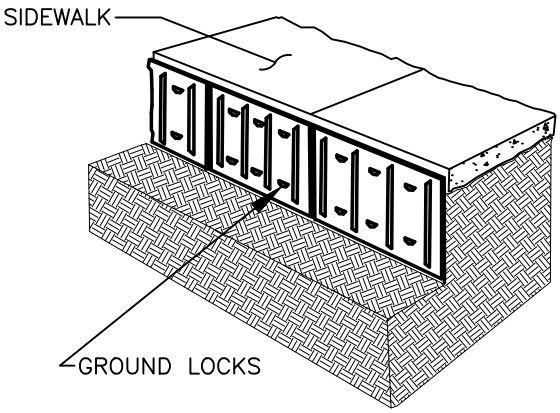

REV NO.	DATE	BY	APPR
1	3/16	RAW	MHA
2	9/21	RAW	MHA

PUBLIC WORKS – STREETS AND TRANSPORTATION

APPROVED BY: M H Abdalla
ENGINEER MANAGER
APPROVED DATE: 9/1/2021

CITY OF Vancouver WASHINGTON

ROOT BARRIER INSTALLATION

STANDARD PLAN NUMBER

T03-22A

I:\CITYAPPS\AUTOCAD\STD_DETAILS\DRAWING_FILES\T03-22A

GENERAL NOTES:

1. SPECIFIED TREE ROOT BARRIERS ARE A MECHANICAL BARRIER AND ROOT DEFLECTOR TO PREVENT TREE ROOTS FROM DAMAGING HARDSCAPES AND LANDSCAPES. ASSEMBLE IN 24 INCHES LONG PANELS WITH RIDGED LOCKING MECHANISMS (JOINER STRIPS OR MALE/FEMALE) TO LINE THE PERIMETER OF THE TREE WELL (SURROUND PLANTING STYLE) OR FOR LINEAR APPLICATIONS DIRECTLY BESIDE A HARDSCAPE ADJACNET TO ONE SIDE OF THE TREES (LINEAR PLANTING STYLE).

2. DIMENSIONS ARE APPROXIMATE, SUBMIT SAMPLE FOR ENGINEERS APPROVAL PRIOR TO INSTALLATION.

A. MATERIALS

1. THE CONTRATCOR SHALL FURNISH AND INSTALL TREE ROOT BARRIERS AS SPECIFIED. THE TREE ROOT BARRIERS SHALL BE BLACK, INJECTED MOLDED OR EXTRUDED MODULAR COMPONENT MADE OF HIGH DENSITY POLYPROPYLENE OR POLYETHYLENE PLASTIC OF MINIMUMN 0.08 INCH WALL THICKNESS IN PANELS 24 INCHES BY 18 INCHES DEEP; PLASTIC SHALL BE RECYLEABLE AND CONTAIN ULTRA–VIOLET INHIBITORS. EACH PANEL SHALL HAVE: NOT LESS THAN FOUR RAISED ROOT DEFELECTING RIBS PROTRUDING .5 INCH AT 90 DEGREES RUNNING THE LENGTH OF THE PANEL SPACED 6 INCHES APART. EACH PANEL SHALL HAVE AN INTEGRAL RIDGED LOCKING MECHANISMS.

2. THE BASIC PROPERTIES OF THE MATERIAL SHALL BE:

TEST	ASTM TEST METHOD	VALUE COPOLYMER POLYPROPYLENE	VALUE HOMOPOLYMER POLYETHYLENE
TENSILE STRESS AT YIELD	D638	3800 PSI	3800 PSI
ELONGATION AT YIELD	D638	6.3%	10.0%
TENSILE MODULUS	D638	N/A	155,000
FLEXURAL MODULUS	D790B	155,000 PSI	N/A
NOTCHED IZOD IMPACT	D256A	7.1	0.4 – 4.0
ROCKWELL HARDNESS R. SCALE	D785A	68	68
FLEXUAL MODULOUS 73 PSI	0790	N/A	145,000
HARDNESS	D2240	N/A	P66

B. CONSTRUCTION AND INSTALLATION

1. THE CONTRACTOR SHALL INSTALL THE TREE ROOT BARRIER WITH THE NUMBER OF PANELS AND IN THE MANNER SHOWN. THE VERTICAL ROOT DEFLECTING RIBS SHALL BE FACING TOWARDS THE TREE AND TOP OF THE PANEL SHALL BE .5 INCH ABOVE SOIL GRADE AND AT LEAST 1 INCH BELOW TOP OF HARDSCAPE SUCH AS PAVER, CURB OR SIDEWALK. PANELS SHALL BE CONNECTED BY RIDGED LOCKING MECHANISMS TO FORM A CIRCLE AROUND THE TREE WELL OR WHERE SPECIFIED JOINED IN A LINEAR FASHION AND PLACED ALONG THE ADJACENT HARDSCAPE.

2. EXCAVATION AND SOIL PREPARATION SHALL CONFORM TO THE DRAWING.

3. IN THE CASE OF SURROUND STYLE PLANTING, THE TREE ROOT BARRIER SHALL BE BACKFILLED ON THE OUTSIDE WITH .75 INCHES TO 1.5 INCH GRAVEL OR CRUSHED ROCK AS SHOWN ON THE DRAWINGS. NO GRAVEL IS REQUIRED FOR A LINEAR PLANTING.

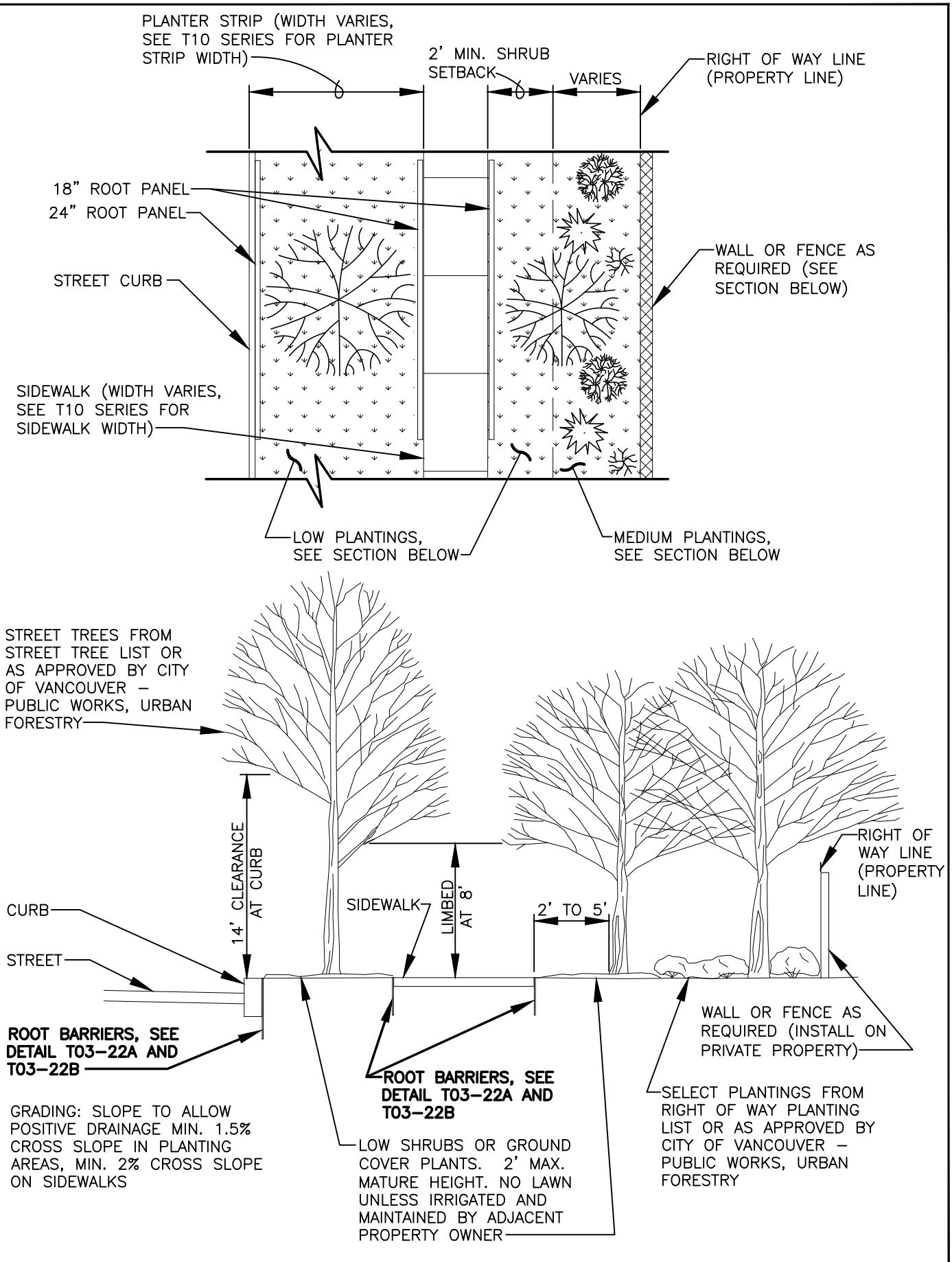

REV NO.	DATE	BY	APPR
1	7/14	RAW	MHA
2	3/17	RAW	MHA
3	9/21	RAW	MHA

PUBLIC WORKS – STREETS AND TRANSPORTATION

APPROVED BY: M H Abdalla
ENGINEER MANAGER

APPROVED DATE: 9/1/2021

CITY OF Vancouver WASHINGTON

PLANTING AT RIGHT OF WAYS

STANDARD PLAN NUMBER

T03–23

I:\CITYAPPS\AUTOCAD\STD_DETAILS\DRAWING_FILES\T03-23

PLANTING AND PRUNING NOTES:

INSTALLATION:
- THE CONTRACTOR SHALL INSTALL THE LANDSCAPE ACCORDING TO THESE PLANS, DETAILS, NOTES AND THE SPECIFICATIONS.

PLANTING NOTES, SPECIFICATIONS, DETAIL, AND LEGEND:
- GENERAL NOTES, TREE PROTECTION REQUIREMENTS AND PLANT LIST ARE ON THIS SHEET.
- SEE PLANTING DETAILS FOR ADDITIONAL INFORMATION AND SPECIAL PROVISIONS.

STREET TREE REQUIREMENTS:
- WHEN PLANTING OR PROPOSING SUBSTITUTIONS STREET TREES MUST ADHERE TO SECTION 20.925.060 OF THE VANCOUVER MUNICIPAL CODE AND STREET TREE LIST OR APPROVED BY CITY OF VANCOUVER PUBLIC WORKS URBAN FORESTRY.

ROOT BARRIERS:
- TREES PLANTED WITHIN MEDIANS AND/OR PLANTING STRIPS WITH LESS THAN 8' WIDTH SHALL BE INSTALLED WITH ROOT BARRIERS AT EDGE OF WALKS AND CURBS.

STANDARD PLANTING NOTES:

1. TOP SOIL REMOVED FROM THE SURFACE IN PREPARATION FOR GRADING AND CONSTRUCTION IS TO BE STORED ON OR NEAR THE SITE AND PROTECTED FROM EROSION WHILE GRADING OPERATIONS ARE UNDERWAY. AFTER COMPLETION OF GRADING, THE TOPSOIL IS TO BE RESTORED TO EXPOSED CUT AND FILL EMBANKMENTS TO PROVIDE A SUITABLE BASE FOR SEEDING AND PLANTING.

2. ALL LANDSCAPING SHALL BE INSTALLED ACCORDING TO ACCEPTED PLANTING PROCEDURES SHOWN IN THESE PLANS AND SPECIFICATIONS.

3. THE PLANT MATERIALS SHALL BE OF HIGH GRADE, AND SHALL MEET THE QUALITY AND SIZE STANDARDS OF THE AMERICAN STANDARDS FOR NURSERY STOCK (ANSI Z60, 1–1986, AS UPDATED).

4. LANDSCAPING SHALL BE INSTALLED IN ACCORDANCE WITH SECTION 20.925.050 VMC.

5. ALL REQUIRED TREES SHALL BE AT LEAST 2" IN CALIPER AND SHRUBS AT LEAST 1 GALLON.

6. TREES SHALL NOT BE PLANTED CLOSER THAN 2' FROM THE FACE OF THE CURB AND 2' FROM ANY PERMANENT HARD SURFACE PAVING OR WALKWAY: SPACE BETWEEN THE TREE AND THE HARD SURFACE MAY BE COVERED BY A NON–PERMANENT HARD SURFACE SUCH AS BRICKS ON SAND, PAVED BLOCKS AND COBBLESTONES.

7. TREES, SHRUBS, PERENNIALS, PERENNIAL GRASSES AND GROUNDCOVERS SHALL BE LOCATED AND SPACED AS SHOWN ON PLANS AND PER DETAILS.

8. A MINIMUM OF 12" DEPTH OF NON–MECHANICALLY COMPACTED SOIL SHALL BE AVAILABLE FOR WATER ABSORPTION AND ROOT GROWTH IN PLANTED AREAS.

9. A 3" LAYER OF BARK MULCH OVER A 3" LAYER OF COMPOST SHALL BE APPLIED TO ALL EXPOSED SOIL SURFACES OF NON–TURF AREAS WITHIN THE LANDSCAPE AREA. PLANT TYPES THAT ARE INTOLERANT OF MULCH, SHALL BE EXEMPT FROM THIS REQUIREMENT. NON–POROUS MATERIAL, SUCH AS PLASTIC SHEETING, SHALL NOT BE PLACED UNDER THE MULCH.

10. INSTALL TEA BAG TYPE FERTILIZERS FOR ALL TREES AND SHRUBS INSTALLED. INSTALL 4 BAGS PER TREE CALIPER INCH AND 3 BAGS PER SHRUB. INSTALL BAGS EQUALLY SPACED AROUND ROOT BALL.

11. THE OWNER OR ASSIGNED AGENT SHALL BE RESPONSIBLE FOR THE MAINTENANCE OF ALL LANDSCAPING AND SCREENING, WHICH SHALL BE MAINTAINED IN GOOD CONDITION SO AS TO PRESENT A HEALTHY, NEAT AND ORDERLY APPEARANCE, SHALL BE REPLACED OR REPAIRED AS NECESSARY, AND SHALL BE KEPT FREE FROM REFUSE AND DEBRIS.

12. CARE OF THE LANDSCAPE ALONG PUBLIC RIGHTS–OF–WAY SHALL ADHERE TO SECTION 20.925.030.F OF THE VANCOUVER MUNICIPAL CODE.

13. ALL LANDSCAPED AREAS SHALL BE PROVIDED WITH AN IRRIGATION SYSTEM OR A READILY AVAILABLE WATER SUPPLY WITH AT LEAST ONE OUTLET LOCATED WITHIN 50' OF ALL PLANT MATERIAL.

PLANTING AND PRUNING NOTES CONT.:

STANDARD PRUNING NOTES:

TREE, SHRUB, AND GROUNDCOVER PRUNING:

- ALL PLANT GROWTH IN LANDSCAPE AREAS SHALL BE CONTROLLED BY PRUNING, TRIMMING OR OTHERWISE SO THAT:
  - IT WILL NOT INTERFERE WITH THE MAINTENANCE OR REPAIR OF ANY PUBLIC UTILITY.
  - IT WILL NOT RESTRICT PEDESTRIAN OR VEHICULAR ACCESS.
  - IT WILL NOT CONSTITUTE A TRAFFIC HAZARD BECAUSE OF REDUCED VISIBILITY.

TREE PRUNING:

- ALL PRUNING OF DECIDUOUS STREET TREES ADJACENT O STREETS AND SIDEWALKS SHALL BE CONSISTENT WITH ANSI A300 PRUNING STANDARDS AND BE PERFORMED PURSUANT TO THE FOLLOWING SCHEDULE AND STANDARDS:

- YEAR 1: ONLY DEAD, BROKEN OR CROSSING BRANCHES SHALL BE PRUNED WHEN THE TREE IS PLANTED.

- YEAR 2: A CLASS I PRUNE, PURSUANT TO NATIONAL ARBORIST ASSOCIATION STANDARDS, SHALL BE PERFORMED DURING YEAR 2. THE PURPOSE OF THIS PRUNING IS TO ESTABLISH PROPER SCAFFOLD BRANCHING, RAISE THE CROWN FOR ROAD / SIDEWALK CLEARANCE, AND REMOVE ANY DEAD DYING OR CROSSING BRANCHES.

- SUCCEEDING YEARS: PERFORM A CLASS I PRUNE DURING SUCCEEDING YEARS TO CONTINUE TO ESTABLISH PROPER SCAFFOLD BRANCHING, REMOVE ANY DEAD, DYING, OR CROSSING BRANCHES, AND CONTINUE TO RAISE THE CROWN UNTIL ROAD AND SIDEWALK CLEARANCES STANDARDS HAVE BEEN MET.

- ALL PRUNING SHALL BE COMPLETED BY PROPERTY OWNER OR A LANDSCAPE CONTRACTOR HIRED BY THE PROPERTY OWNER.

TREES AND SHRUBS IN SIGHT TRIANGLES:

- ALL SHRUBS WITHIN SIGHT DISTANCE TRIANGLES SHALL BE MAINTAINED SO THAT FOLIAGE HEIGHT ABOVE PAVEMENT DOES NOT EXCEED 2'–6". TREES WITHIN SIGHT TRIANGLES SHALL BE LIMBED UP AS FOLLOWS FOR SIGHT DISTANCE VISIBILITY:

- IN CITY OF VANCOUVER: 10' ABOVE STREET GRADE (PER VANCOUVER MUNICIPAL CODE, CHAPTER 20.985; ALSO APPLIES TO TREES OVER SIDEWALKS IF IN SIGHT TRIANGLES).

TREES NOT IN SIGHT DISTANCE TRIANGLES:

- IN CITY OF VANCOUVER: 8' ABOVE SIDEWALK FOR PEDESTRIAN CLEARANCE, 13' ABOVE A LOCAL STREET, 15' ABOVE A COLLECTOR STREET, AND 18' ABOVE AN ARTERIAL STREET ROADWAY SURFACES (PER VANCOUVER MUNICIPAL CODE, CHAPTER 20.925.030.C, PRUNING REQUIRED.

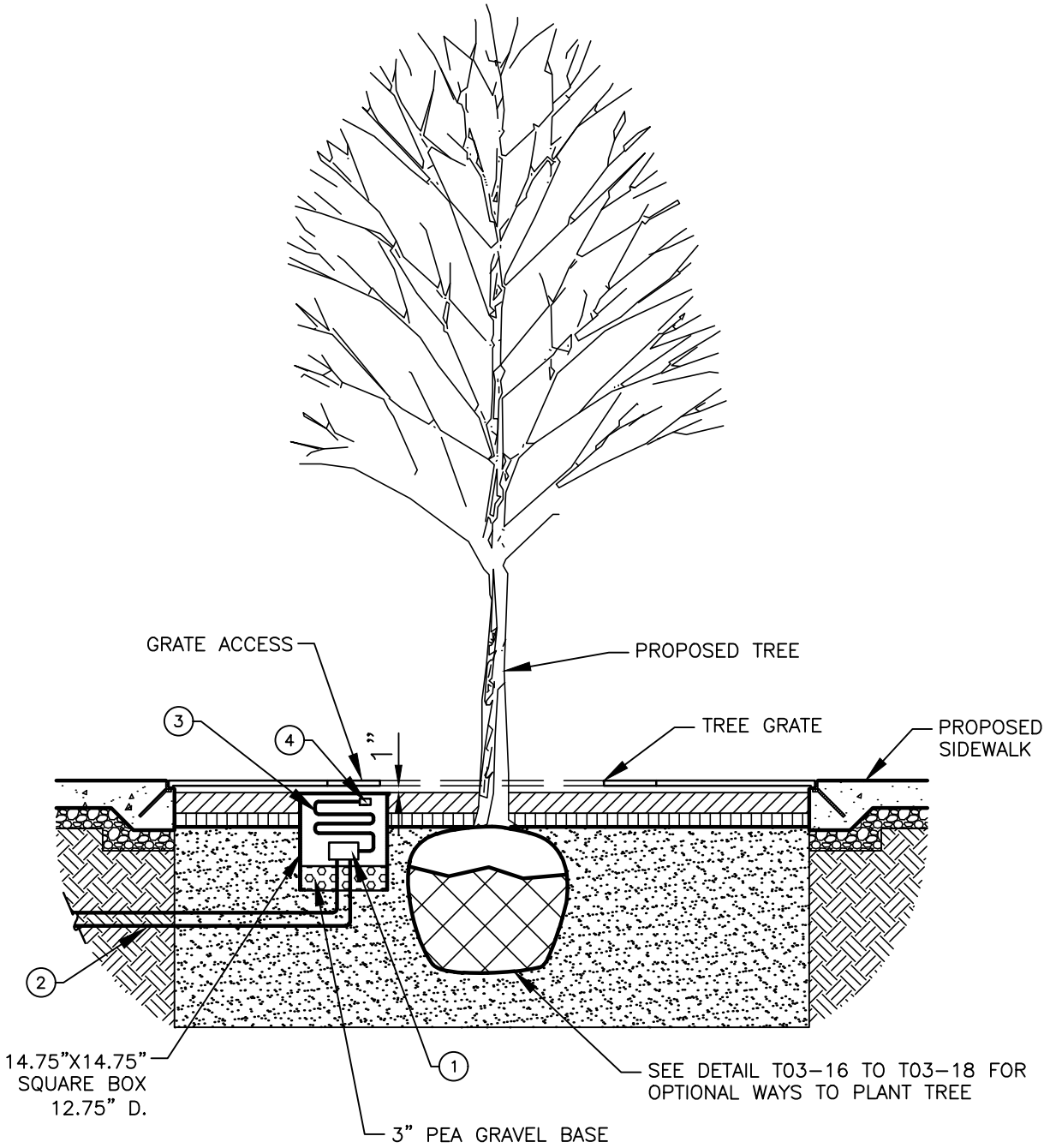

NOTES:

1. WEATHERPROOF, WATER TIGHT J-BOX WITH WATER TIGHT CONNECTIONS TO CONDUIT AND RECEPTACLE CORD BOX TO BE LOCATED 4"-8" BELOW GRATE ACCESS BOX TO (AND?) ANCHORED TO BOX.

2. CIRCUITING CONTINUED IN CONDUIT. MINIMUM 18" DEPTH. MINIMUM 4' OF GALVANIZED RIGID CONDUIT FROM TERMINATION TO WEATHER PROOF BOX. 3 PIECE COUPLINGS AT THE BOX ARE ACCEPTABLE WHEN THREADS ARE TREATED WITH NEVER SIEZE.

3. 4' (3) CONDUCTOR OUTDOOR RATED FLEXIBLE CABLE. RATED FOR OUTDOOR WET LOCATION USE. SOUTH WIRE 'SJEOW' OR APPROVED EQUAL.

4. WATERTIGHT TWIST-LOCK RECEPTACLE WITH SAFETY SHROUD. HUBELL HBL 15W47. NEMA 5-15R OR APPROVED EQUAL.

REV NO.	DATE	BY	APPR
1	2/21	OIS	MHA
2	9/21	RAW	MHA

PUBLIC WORKS – STREETS AND TRANSPORTATION

APPROVED BY: M H Abdalla
ENGINEER MANAGER
APPROVED DATE: 9/1/2021

CITY OF Vancouver WASHINGTON

ELECTRICAL OUTLET DETAIL FOR TREE WELL

STANDARD PLAN NUMBER

T03-25

I:\CITYAPPS\AUTOCAD\STD_DETAILS\DRAWING_FILES\T03-25

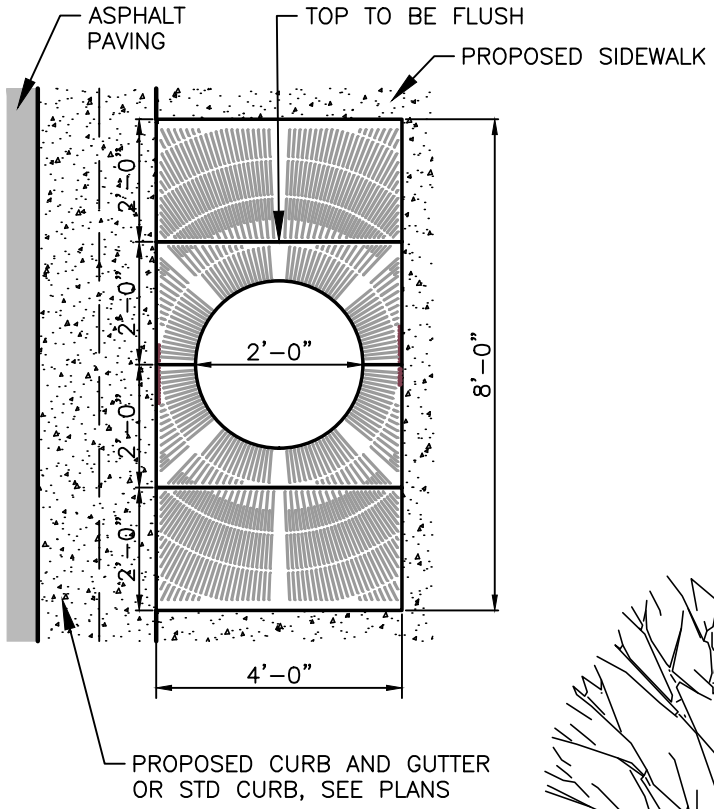

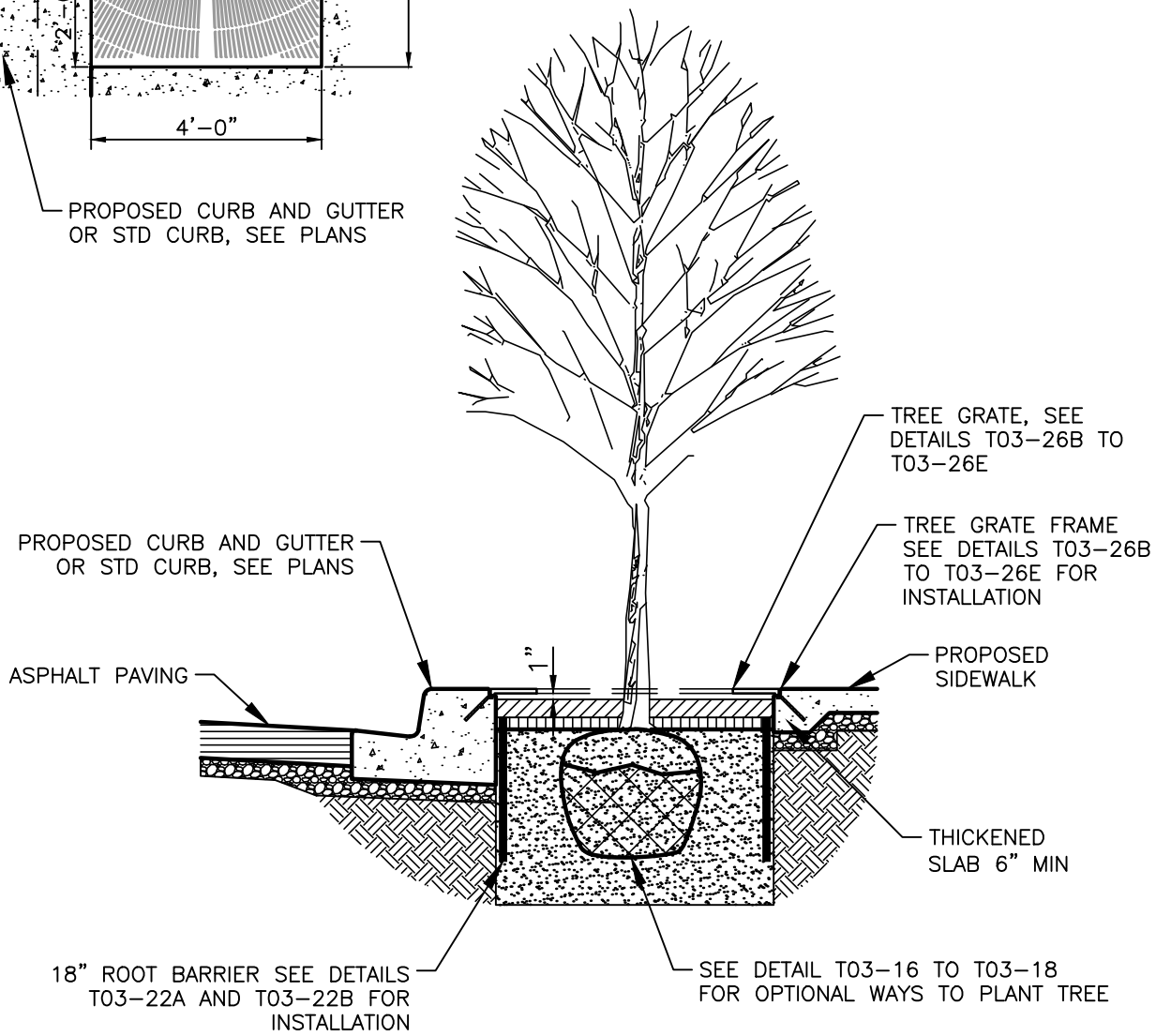

REV NO.	DATE	BY	APPR
1	2/21	OIS	MHA
2	9/21	RAW	MHA

PUBLIC WORKS – STREETS AND TRANSPORTATION

APPROVED BY: M H Ledalla
ENGINEER MANAGER
APPROVED DATE: 9/1/2021

CITY OF Vancouver WASHINGTON

4' X 8' TREE GRATE

STANDARD PLAN NUMBER
T03-26A

I:\CITYAPPS\AUTOCAD\STD_DETAILS\DRAWING_FILES\T03-26A

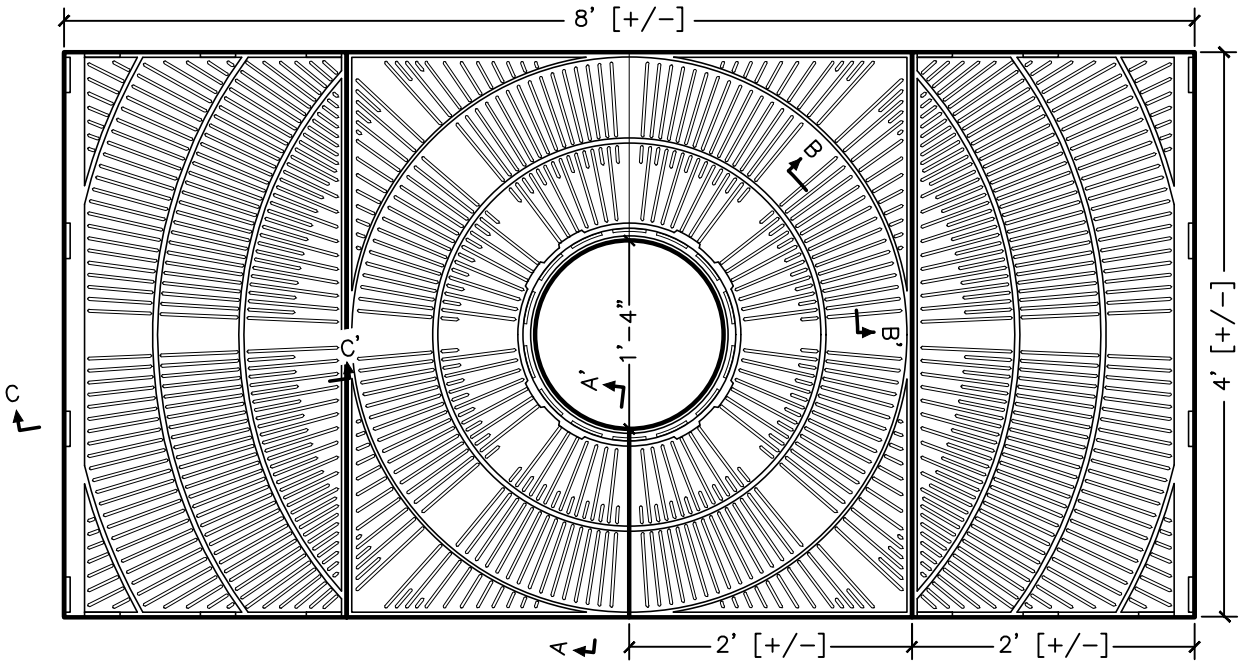

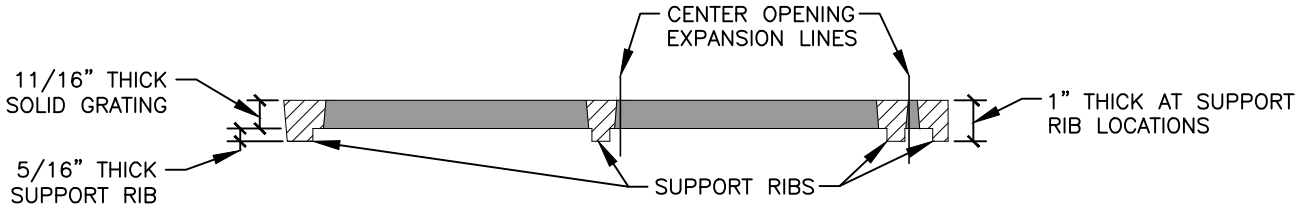

SECTION A–A'

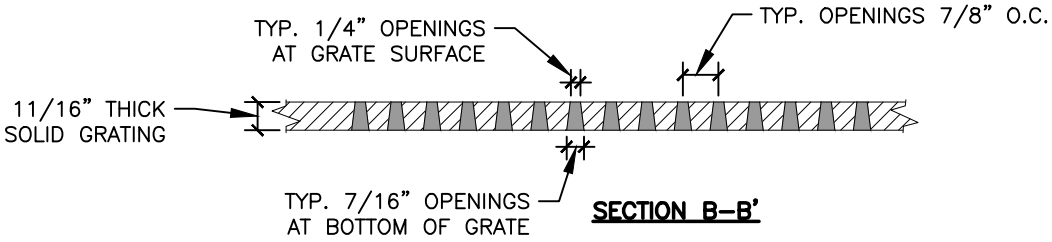

SECTION B–B'

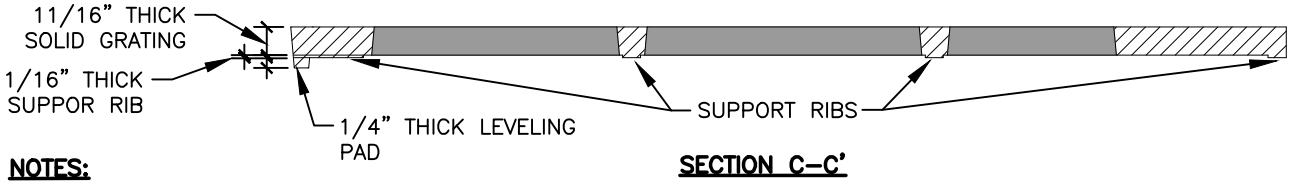

SECTION C–C'

NOTES:

1. CAST IN FOUR PIECES.
2. GRATE IS 1" THICK AT EDGE.
3. CENTER OPENING EXPANSIONS AT 1'–6" AND 2'–8".
4. NO OPENINGS GREATER THAN 1/4", IN CONFORMANCE WITH ADA ACCESSIBILITY GUIDELINES.
5. GRATE WEIGHS 604 LBS.
6. MATERIAL WILL BE HIGH QUALITY 100% RECYCLED GREY IRON; ASTM A48 CLASS 35B OR BETTER; HARDNESS 170–223 BRINNEL (UNLESS SPECIFIED OTHERWISE).
7. FINISH WILL BE NATURAL PATINA OF RAW IRON (UNLESS SPECIFIED OTHERWISE).
8. DIMENSIONS ARE NOMINAL.

REV NO.	DATE	BY	APPR
1	2/21	OIS	MHA
2	9/21	RAW	MHA

PUBLIC WORKS – STREETS AND TRANSPORTATION

APPROVED BY: M H Abdalla
ENGINEER MANAGER

APPROVED DATE: 9/1/2021

CITY OF Vancouver WASHINGTON

4' X 8' TREE GRATE

STANDARD PLAN NUMBER

T03–26B

I:\CITYAPPS\AUTOCAD\STD_DETAILS\DRAWING_FILES\T03-26B

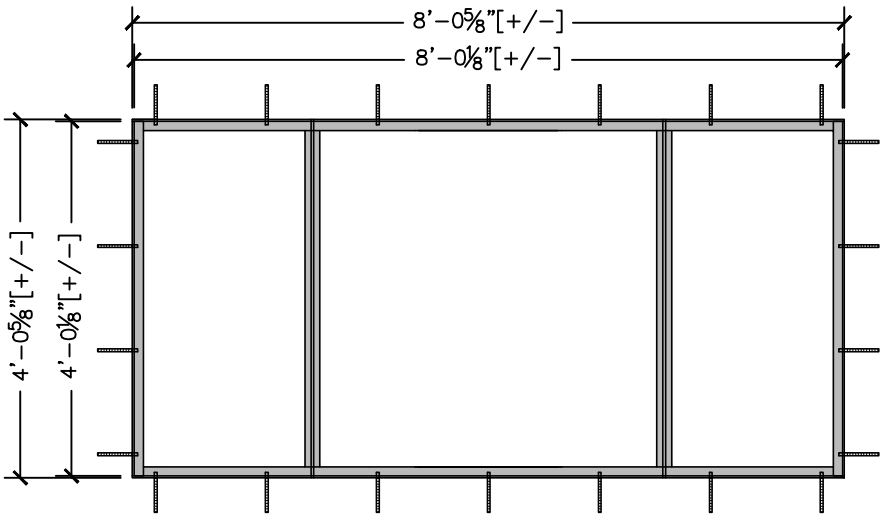

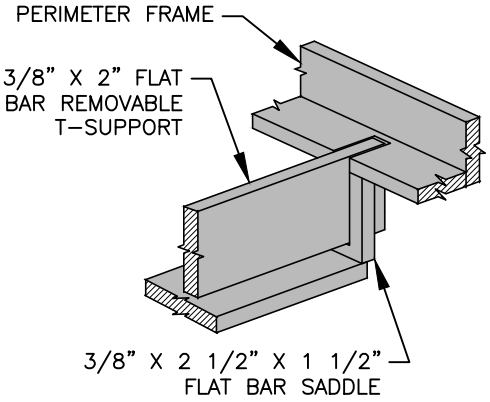

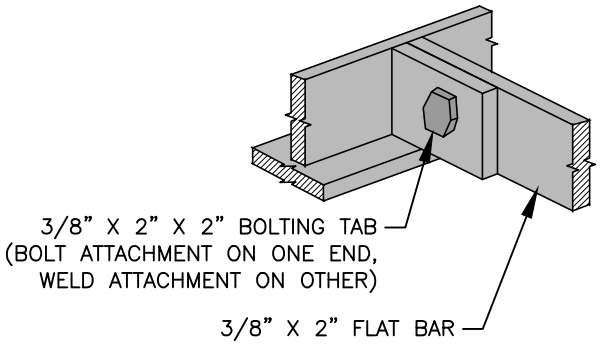

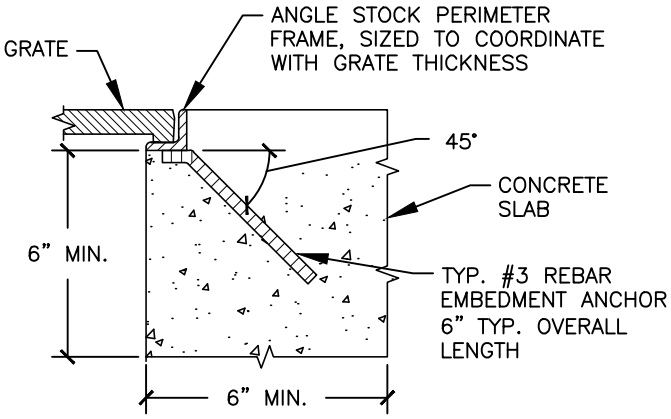

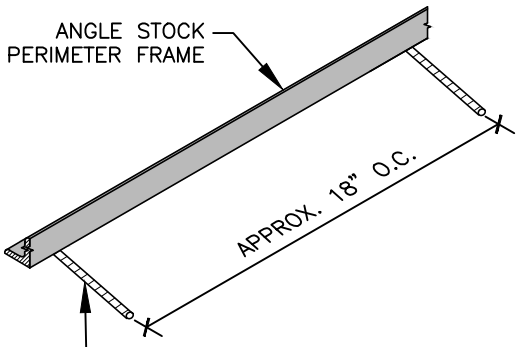

NOTES:

1. FRAMES ARE CONSTRUCTED OF MILD STEEL ASTM A36 (UNLESS SPECIFIED OTHERWISE).
2. FINISH WILL BE NATURAL PATINA OF RAW STEEL (UNLESS SPECIFIED OTHERWISE).
3. FRAME IS LOAD RATED FOR PEDESTRIAN TRAFFIC ONLY (UNLESS SPECIFIED OTHERWISE).
4. TYPICAL 1/8" HORIZONTAL GAP BETWEEN GRATE AND FRAME. ALL VISIBLE WELDS TO BE GROUND SMOOTH ON OUTSIDE EDGES. FRAMES WILL BE TRUE TO SQUARE OR DIAMETER. TOP OF GRATE FLUSH WITH GRADE OF SURROUNDING TOPPING MATERIAL (PAVER, CONCRETE SLAB, ETC.).
5. DIMENSIONS ARE NOMINAL.

REV NO.	DATE	BY	APPR
1	2/21	OIS	MHA
2	9/21	RAW	MHA

PUBLIC WORKS – STREETS AND TRANSPORTATION

APPROVED BY: M H Abdalla
ENGINEER MANAGER
APPROVED DATE: 9/1/2021

CITY OF Vancouver WASHINGTON

4' X 8' TREE GRATE FRAME PREFERRED OPTION

STANDARD PLAN NUMBER
T03-26C

I:\CITYAPPS\AUTOCAD\STD_DETAILS\DRAWING_FILES\T03-26C

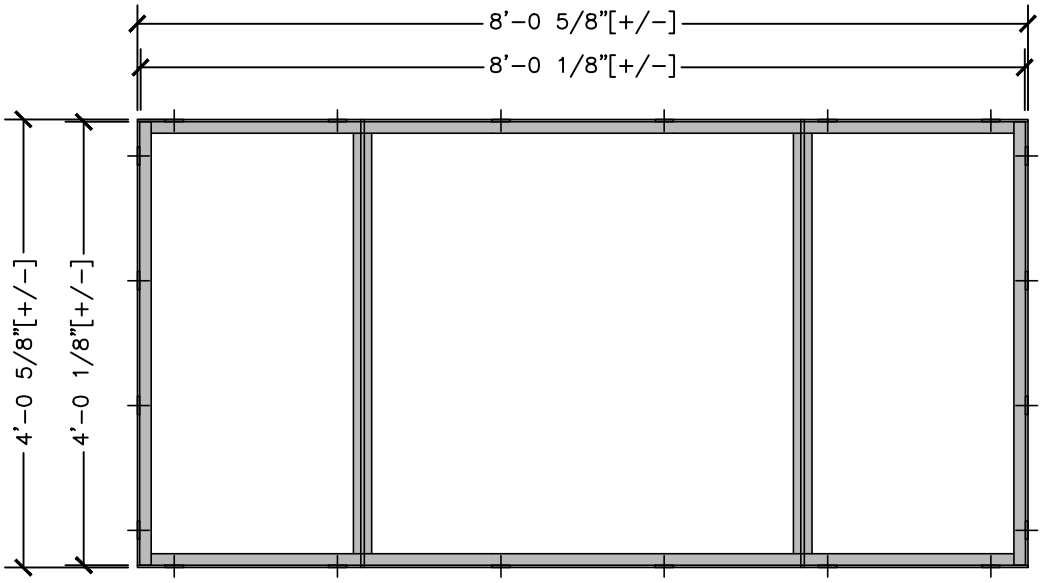

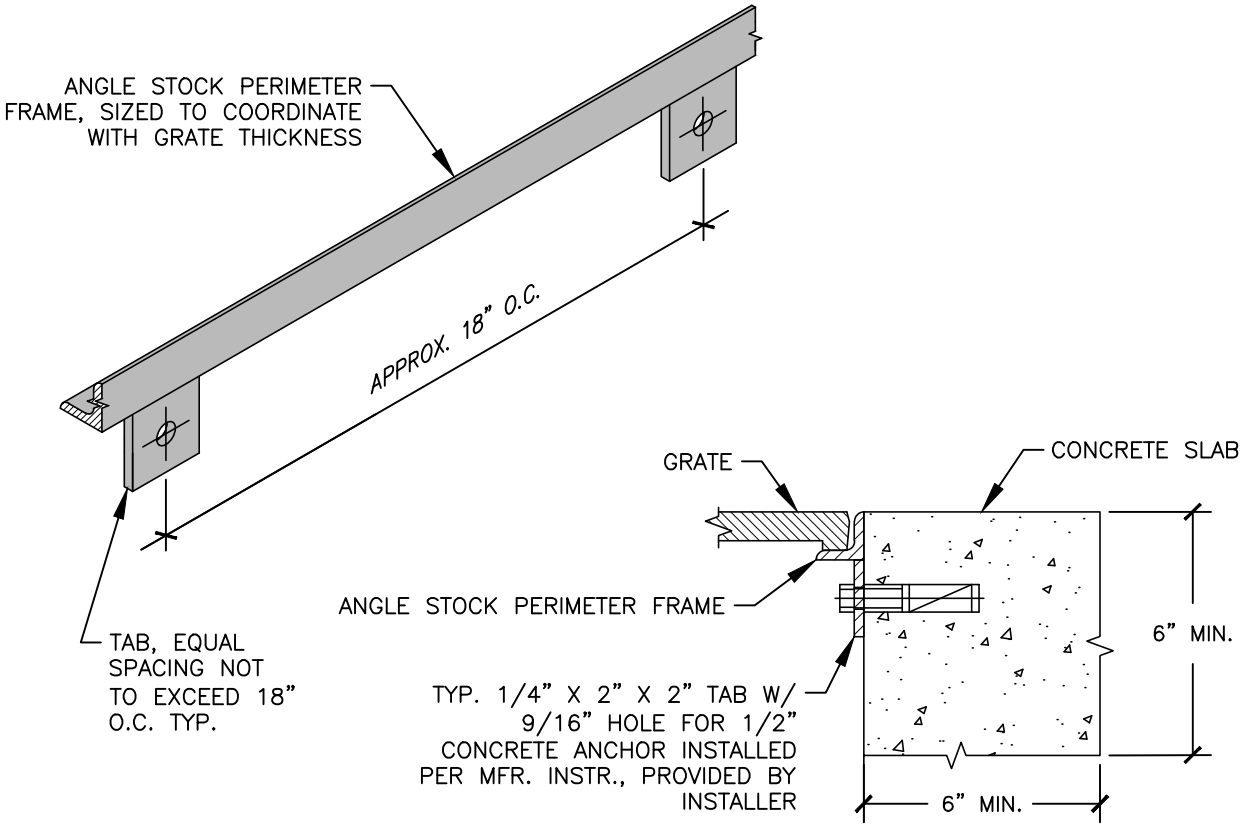

NOTES:

1. FRAMES ARE CONSTRUCTED OF MILD STEEL ASTM A36 UNLESS SPECIFIED OTHERWISE.
2. FINISH WILL BE NATURAL PATINA OF RAW STEEL UNLESS SPECIFIED OTHERWISE.
3. FRAME IS LOAD RATED FOR PEDESTRIAN TRAFFIC ONLY UNLESS SPECIFIED OTHERWISE.
4. TYPICAL 1/8" HORIZONTAL GAP BETWEEN GRATE AND FRAME. ALL VISIBLE WELDS TO BE GROUND SMOOTH ON OUTSIDE EDGES. FRAMES WILL BE TRUE TO SQUARE OR DIAMETER. TOP OF GRATE FLUSH WITH GRADE OF SURROUNDING TOPPING MATERIAL (PAVER, CONCRETE SLAB, ETC.).
5. DIMENSIONS ARE NOMINAL.

REV NO.	DATE	BY	APPR
1	2/21	OIS	MHA
2	9/21	RAW	MHA

PUBLIC WORKS – STREETS AND TRANSPORTATION

APPROVED BY: M H Abdalla
ENGINEER MANAGER
APPROVED DATE: 9/1/2021

CITY OF Vancouver WASHINGTON

4' X 8' TREE GRATE FRAME RETRO-FIT

STANDARD PLAN NUMBER
T03-26D

I:\CITYAPPS\AUTOCAD\STD_DETAILS\DRAWING_FILES\T03-26D

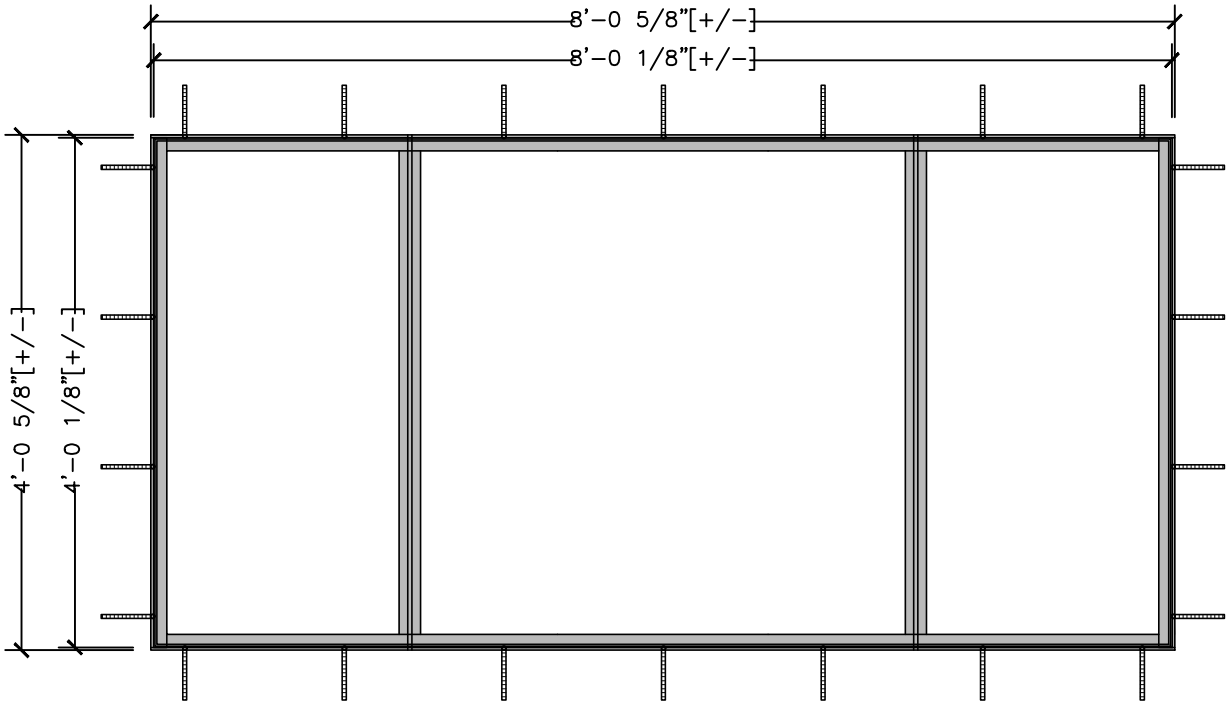

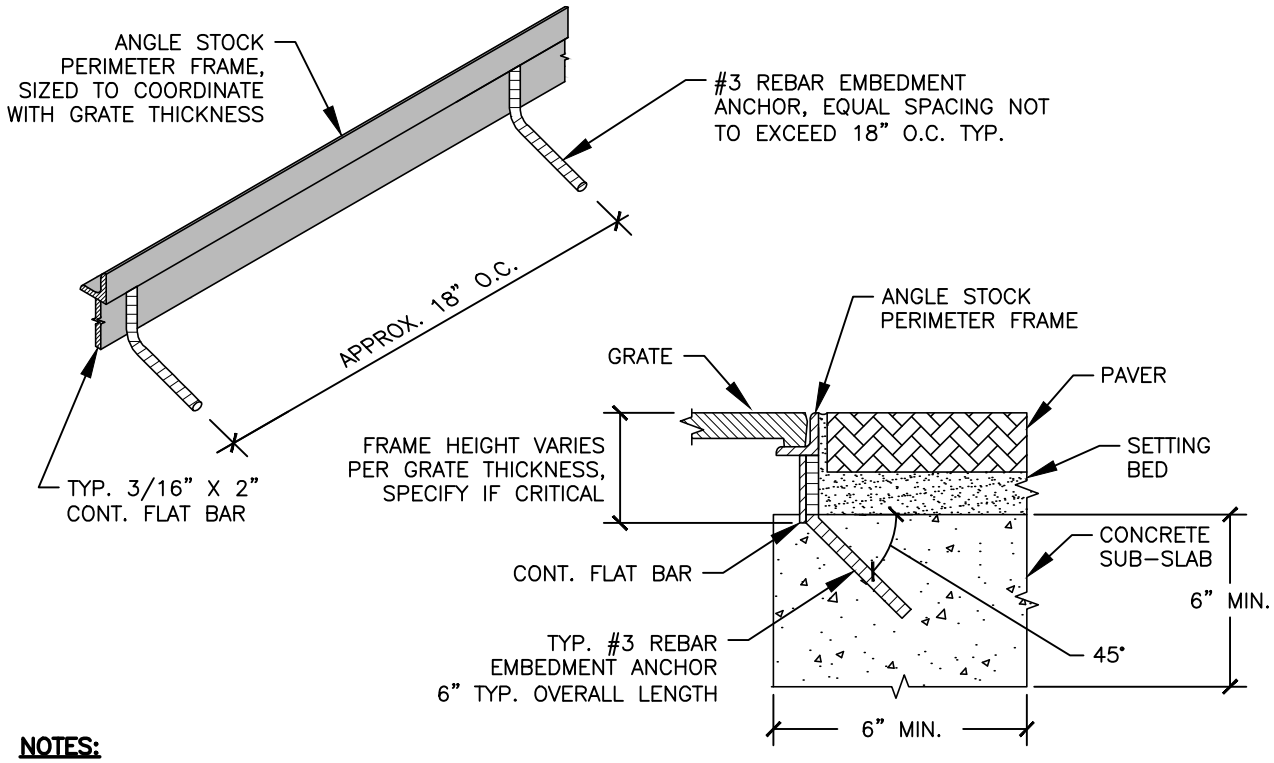

NOTES:

1. FRAMES ARE CONSTRUCTED OF MILD STEEL ASTM A36 (UNLESS SPECIFIED OTHERWISE).
2. FINISH WILL BE NATURAL PATINA OF RAW STEEL (UNLESS SPECIFIED OTHERWISE).
3. FRAME IS LOAD RATED FOR PEDESTRIAN TRAFFIC ONLY (UNLESS SPECIFIED OTHERWISE).
4. TYPICAL 1/8" HORIZONTAL GAP BETWEEN GRATE AND FRAME. ALL VISIBLE WELDS TO BE GROUND SMOOTH ON OUTSIDE EDGES. FRAMES WILL BE TRUE TO SQUARE OR DIAMETER. TOP OF GRATE FLUSH WITH GRADE OF SURROUNDING TOPPING MATERIAL (PAVER, CONCRETE SLAB, ETC.).
5. DIMENSION ARE NOMINAL.

REV NO.	DATE	BY	APPR
1	2/21	OIS	MHA
2	9/21	RAW	MHA

PUBLIC WORKS – STREETS AND TRANSPORTATION

APPROVED BY: M H Abdalla
ENGINEER MANAGER
APPROVED DATE: 9/1/2021

CITY OF Vancouver WASHINGTON

TREE GRATE FRAME FOR PAVER SIDEWALK AREAS

STANDARD PLAN NUMBER
T03-26E

I:\CITYAPPS\AUTOCAD\STD_DETAILS\DRAWING_FILES\T03-26E

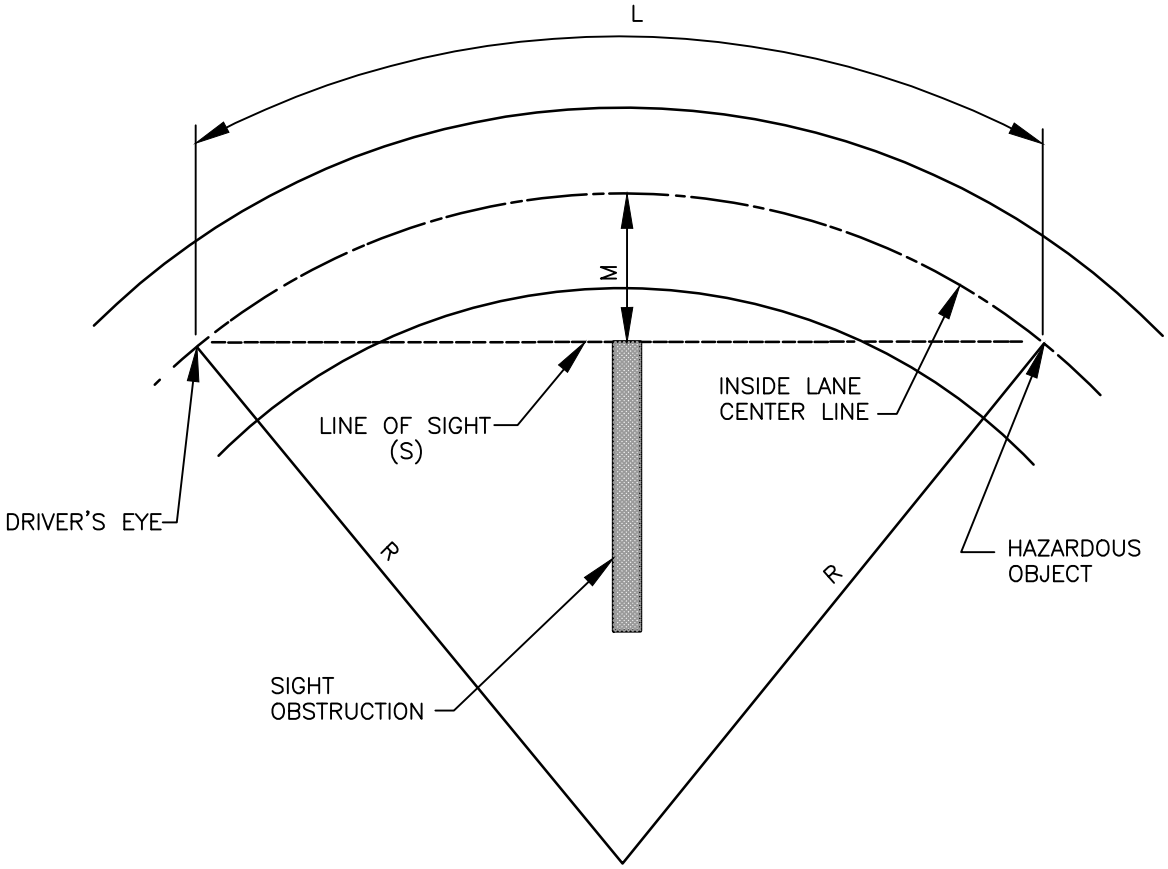

IF THE STOPPING SIGHT DISTANCE, S, AND THE RADIUS TO THE CENTER OF THE INSIDE LANE, R, ARE KNOWN, THE DISTANCE, M, IS FOUND BY THE FOLLOWING EQUATION:
$M = R[1-\cos(28.65\ S/R)]$

IF THE RADIUS, R, AND THE DISTANCE, M, ARE TENTATIVELY SELECTED, THEN THE LENGTH, L, OF THE ARC IN THE MIDDLE OF THE INSIDE LANE MAY BE FOUND BY THE FOLLOWING EQUATION:
$L = (R/28.65)\arccos[(R-M)/R]$

IF THE LENGTH, L, IS LESS THAN THE STOPPING SIGHT DISTANCE FOR THE DESIRED DESIGN SPEED, EITHER THE RADIUS, R, OR THE DISTANCE, M, MUST BE INCREASED.

DESIGN SPEED MPH	25	30	35	40	45	50
STOPPING SIGHT DISTANCE, S, (FT.) AS MEASURED ALONG THE PATH OF THE VEHICLE	150	200	250	325	400	475

REV NO.	DATE	BY	APPR
1	8/04	RAW	MHA
2	3/06	RAW	MHA
3	2/07	RAW	MHA
4	8/08	RAW	MHA
5	7/14	RAW	MHA
6	9/21	RAW	MHA

PUBLIC WORKS – STREETS AND TRANSPORTATION

APPROVED BY: M H Abdalla
ENGINEER MANAGER
APPROVED DATE: 9/1/2021

CITY OF Vancouver WASHINGTON

VIEW OBSTRUCTIONS FOR HORIZONTAL CURVES

STANDARD PLAN NUMBER
T04–01

I:\CITYAPPS\AUTOCAD\STD_DETAILS\DRAWING_FILES\T04-01

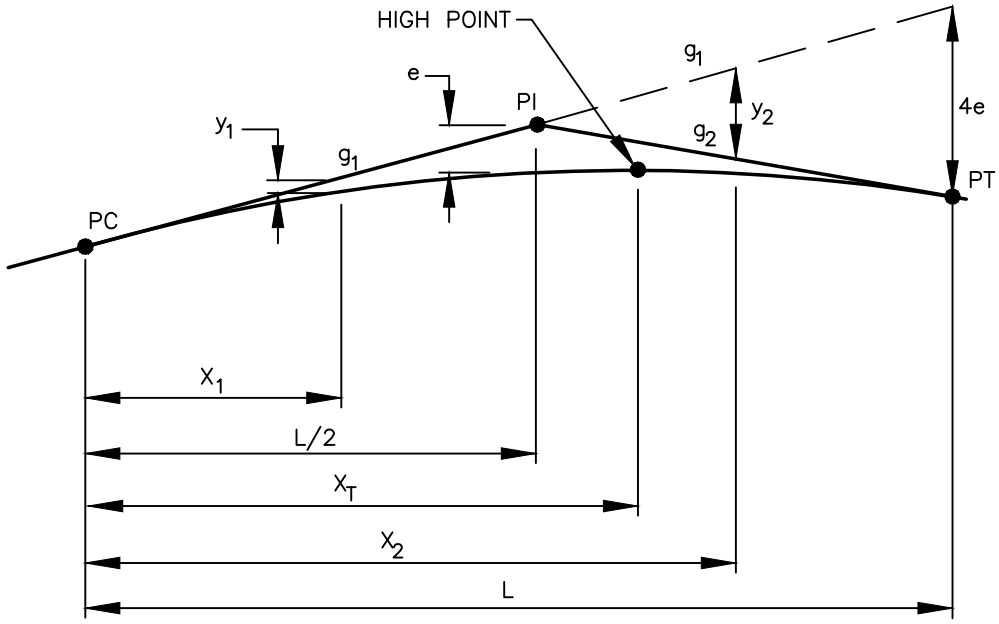

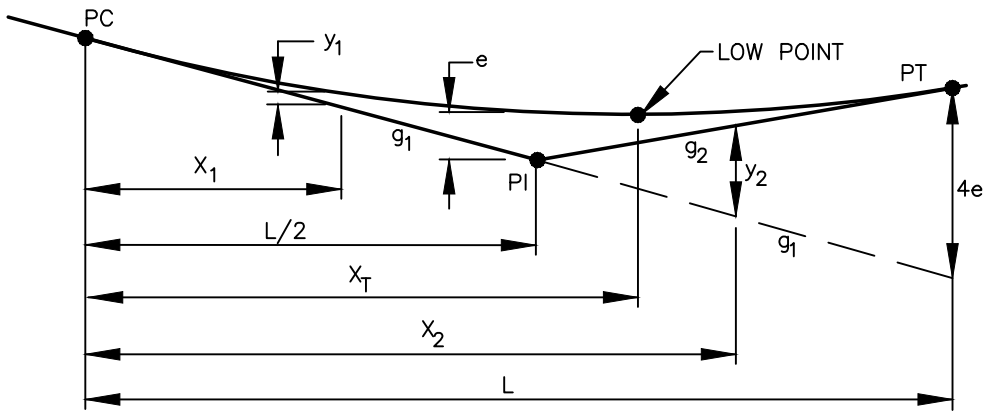

NOTES:

THE FOLLOWING EQUATIONS ARE FOR PARABOLIC, VERTICAL CURVES. THE GRADES g_1 AND g_2 MUST BE USED WITH THEIR ALGEBRAIC SIGNS (+ OR −). IF g_1 AND g_2 ARE EXPRESSED AS PERCENTAGES, L AND X MUST BE EXPRESSED IN STATIONS. IF g_1 AND g_2 ARE EXPRESSED AS FEET PER FOOT, L AND X MUST BE EXPRESSED IN FEET. THE SYMBOLS ARE DEFINED BY THE ABOVE DIAGRAMS.

$$A=g_1-g_2 \quad G=g_1-g_2 \quad e=LG/8 \quad y=4e(X/L)^2=(A/sL)X^2$$

THE EQUATION BELOW PROVIDES THE LOCATION, X_T, OF THE CURVE TURNING POINT WHICH IS THE HIGH POINT OR LOW POINT ON THE CURVE. THIS EQUATION IS ONLY APPLICABLE WHEN g_1 AND g_2 ARE NOT OF THE SAME SIGN, ALGEBRAICALLY.

$$X_T=(g_1 L)/(g_1-g_2)$$

REV NO.	DATE	BY	APPR
1	8/04	RAW	MHA
2	3/06	RAW	MHA
3	2/07	RAW	MHA
4	8/08	RAW	MHA
5	7/14	RAW	MHA
6	9/21	RAW	MHA

PUBLIC WORKS – STREETS AND TRANSPORTATION

APPROVED BY: M H Abdalla
ENGINEER MANAGER

APPROVED DATE: 9/1/2021

CITY OF Vancouver WASHINGTON

VERTICAL CURVE RELATIONSHIPS

STANDARD PLAN NUMBER

T04–02

I:\CITYAPPS\AUTOCAD\STD_DETAILS\DRAWING_FILES\T04-02

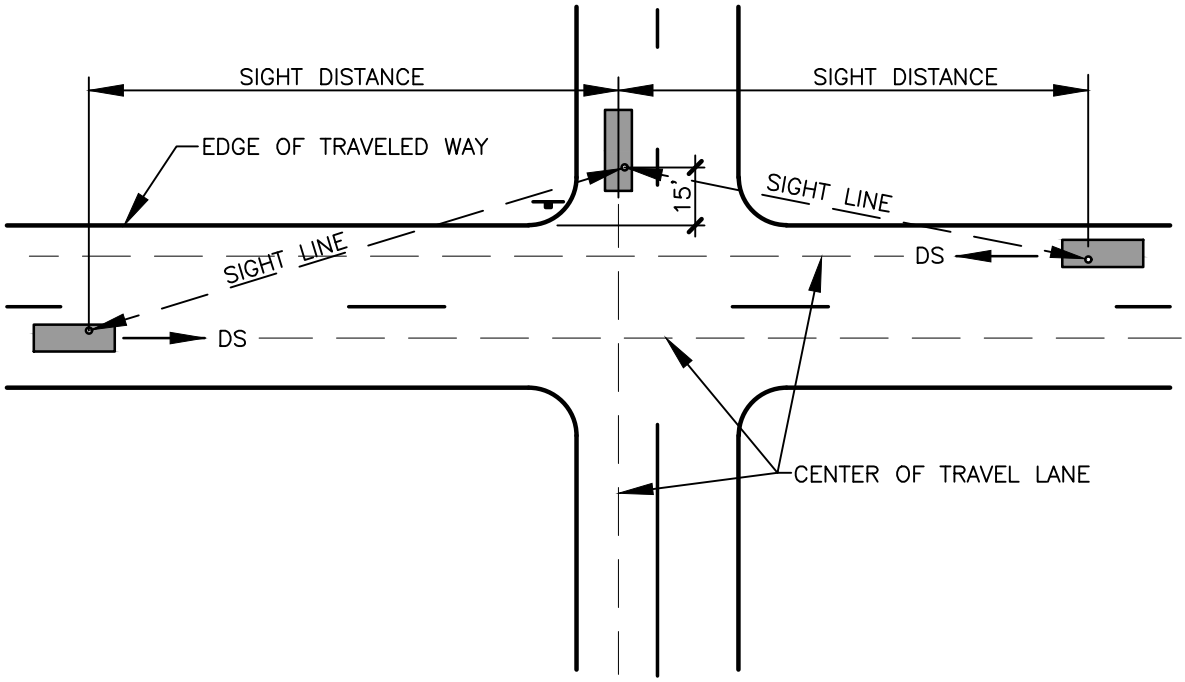

CONTROLLED INTERSECTION	
DESIGN SPEED (DS) (MPH)	SIGHT DISTANCE (FT.)
25	250
30	300
35	350
40	400
45	450
50	500

DS= DESIGN SPEED ON THE THROUGH HIGHWAY

NOTES:

1. FOR CONTROLLED INTERSECTIONS, STREETS SHALL HAVE MINIMUM CORNER SIGHT DISTANCES, AS MEASURED FROM A HEIGHT OF 3.5 FEET ABOVE THE CONTROLLED STREET, PER VMC 11.80.140.
2. PUBLIC, PRIVATE STREET INTERSECTIONS AND COMMERCIAL DRIVEWAYS ON ARTERIAL STREETS SHALL HAVE AN UNOBSTRUCTED SIGHT DISTANCE TRIANGLE MEASURED IN THE SAME FASHION AS CONTROLLED INTERSECTIONS.
3. IF THE STREETS ARE NOT LEVEL, FOLLOW WSDOT DESIGN MANUAL TO CONSIDER GRADE.
4. "DESIGN SPEED" SHALL BE THE POSTED SPEED OR THE 85% PERCENTILE OF THE PREVAILING SPEED WHICHEVER IS HIGHER.
5. FOR UNCONTROLLED INTERSECTIONS USE THE LATEST AASHTO MANUAL REQUIREMENTS FOR SIGHT DISTANCE.

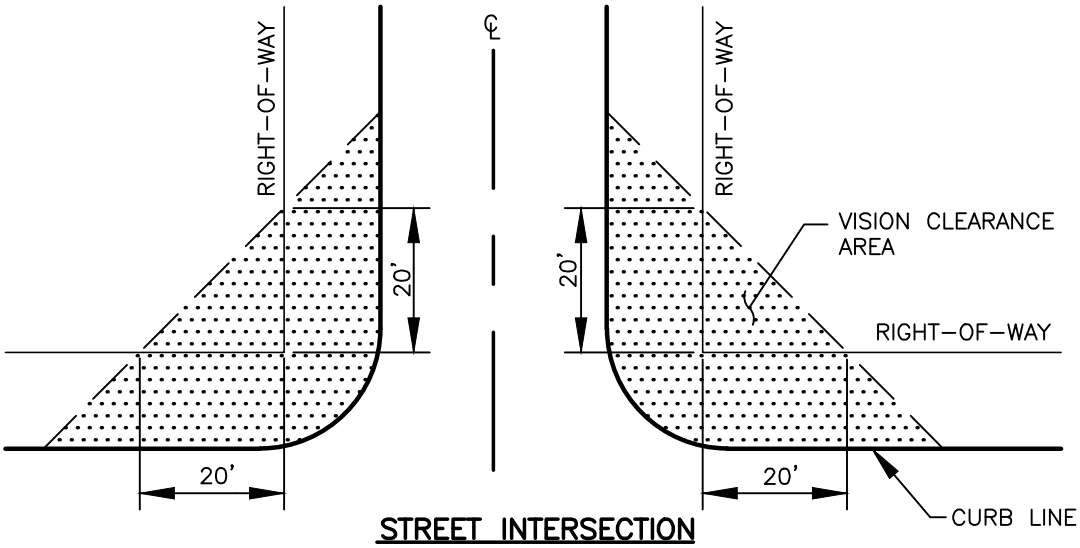

STREET INTERSECTION

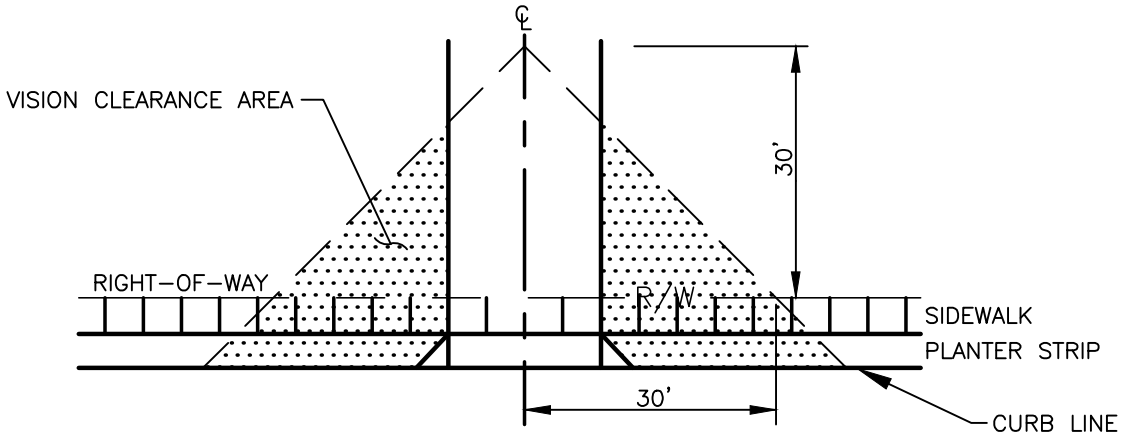

COMMERCIAL DRIVEWAYS, PRIVATE STREETS, MULTI FAMILY DWELLINGS, LOCAL SERVICE STREETS AND ALLEYS

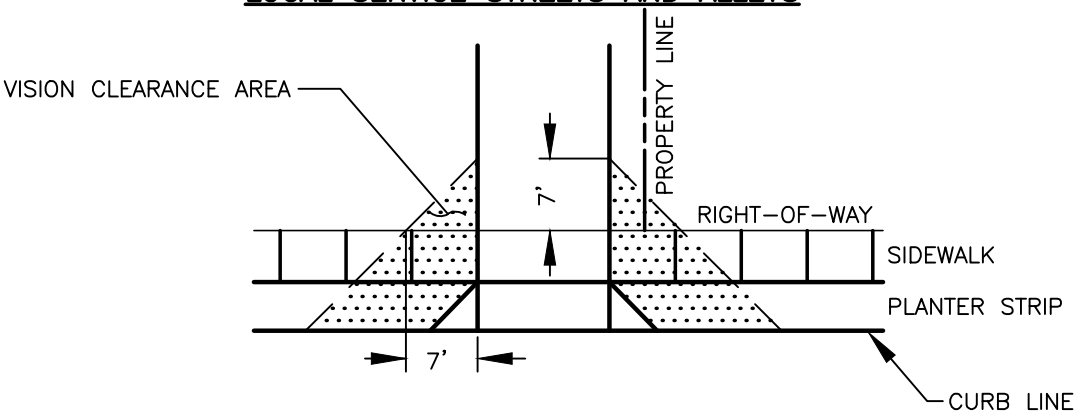

RESIDENTIAL DRIVEWAYS AND SINGLE FAMILY DWELLINGS

NOTES:

1. THERE SHALL BE NO SIGHT OBSTRUCTION WITHIN THE TRIANGULAR VISION CLEARANCE AREA BETWEEN 30-INCHES AND 10-FEET ABOVE THE STREET GRADE, PER VMC 20.985.

2. NO STREET TREES THAT WILL GROW BEYOND 12" DIAMETER SHALL BE PLACED WITHIN THE VISION CLEARANCE TRIANGLES, SEE VMC 20.925.060 FOR ADDITIONAL INFORMATION ON STREET TREES.

3. IN ADDITION TO VISION CLEARANCE TRIANGLE, STREET INTERSECTIONS SHALL COMPLY WITH SIGHT DISTANCE PROVISIONS DEFINED IN THE "INTERSECTION CHAPTER" OF THE AASHTO'S POLICY ON GEOMETRIC DESIGN OF HIGHWAYS AND STREETS. THE INTERSECTION SIGHT DISTANCE AND SIGHT LINE SHALL BE SHOWN ON PLAN SUBMITTALS.

REV NO.	DATE	BY	APPR
1	8/04	RAW	MHA
2	3/06	RAW	MHA
3	2/07	RAW	MHA
4	8/08	RAW	MHA
5	7/14	RAW	MHA
6	9/21	RAW	MHA

PUBLIC WORKS – STREETS AND TRANSPORTATION

APPROVED BY: M H Abdalla
ENGINEER MANAGER

APPROVED DATE: 9/1/2021

CITY OF Vancouver WASHINGTON

VISION CLEARANCE TRIANGLES

STANDARD PLAN NUMBER

T04-04

I:\CITYAPPS\AUTOCAD\STD_DETAILS\DRAWING_FILES\T04-04

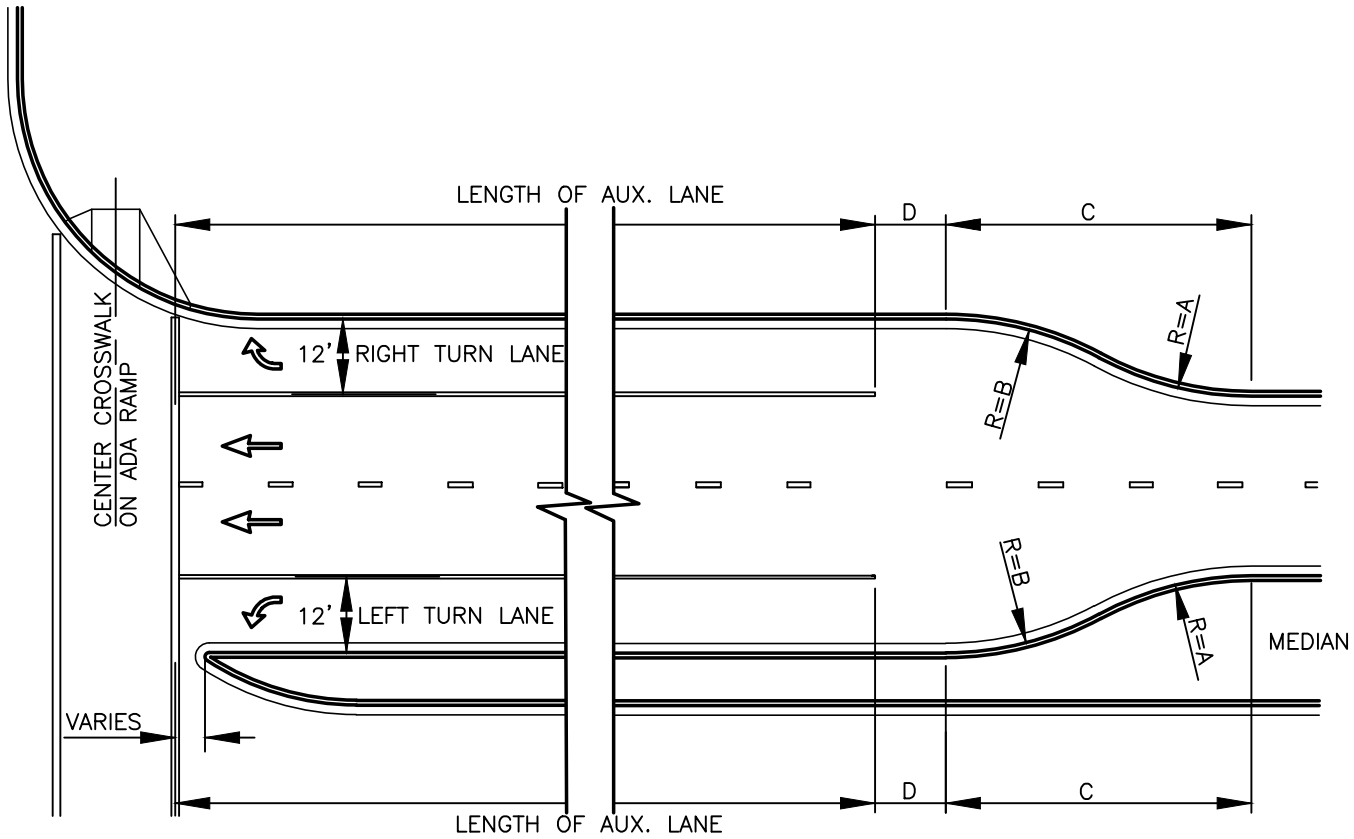

DESIGN SPEED	DIMENSIONS IN FT.			
	A(RAD.)	B(RAD.)	C	D
DS > 35 MPH	150	150	86	50*
DS ≤ 35 MPH	50	50	49	50*

AUXILIARY LANE LENGTHS DEPEND ON LOCAL TRAFFIC NEEDS AS DEMONSTRATED IN APPROVED TRAFFIC STUDY.

*OR FOLLOW CHART ON WSDOT STD. PLAN M-3.10-xx.

NOTES:

1. DIMENSIONS ASSUME SINGLE LEFT TURN LANE WITH A CURBED MEDIAN.
2. FOR ADDITIONAL INFORMATION, REFER TO THE CURRENT AASHTO MANUAL.
3. PRIOR TO USING ANY OTHER OPTION FOR TURN LANE TAPERS, APPROVAL FROM THE CITY ENGINEER IS REQUIRED.

REV NO.	DATE	BY	APPR
1	8/04	RAW	MHA
2	3/06	RAW	MHA
3	2/07	RAW	MHA
4	8/08	RAW	MHA
5	7/14	RAW	MHA
6	9/21	RAW	MHA

PUBLIC WORKS – STREETS AND TRANSPORTATION

APPROVED BY: M H Abdalla
ENGINEER MANAGER

APPROVED DATE: 9/1/2021

CITY OF Vancouver WASHINGTON

AUXILIARY LANES

STANDARD PLAN NUMBER

T04-05

I:\CITYAPPS\AUTOCAD\STD_DETAILS\DRAWING_FILES\T04-05

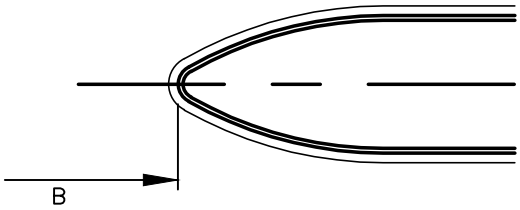

END OF MEDIAN ISLAND NOT AT INTERSECTIONS

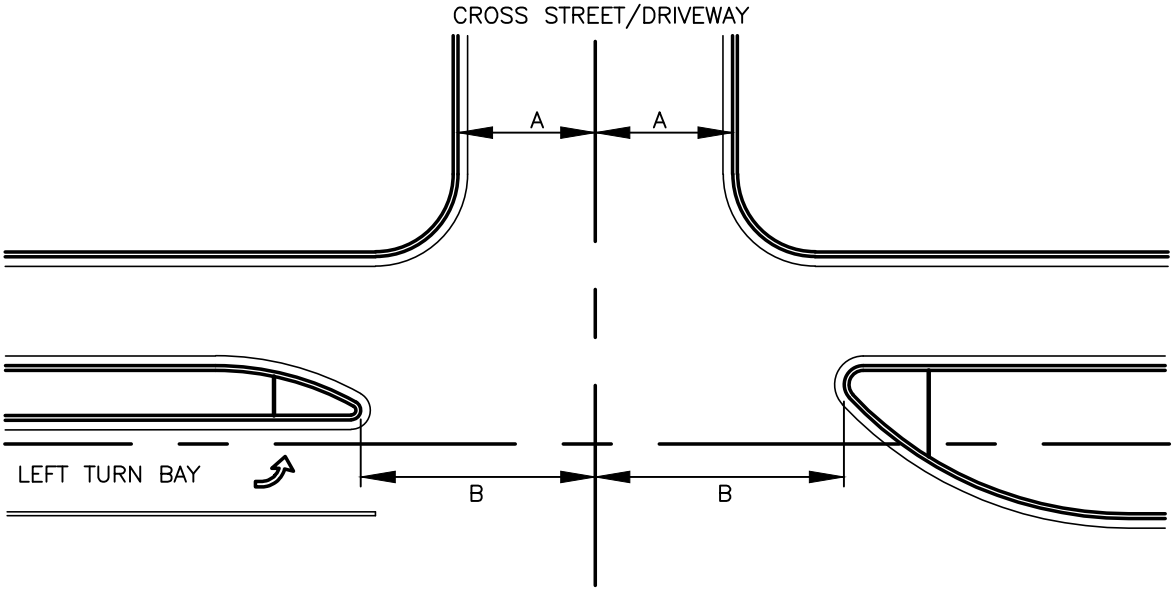

NOTE:

1. THIS SKETCH IS FOR A THREE–LEG INTERSECTION. IF THE INTERSECTION HAS FOUR LEGS, THE RIGHT SIDE WILL ALSO HAVE AN AUXILIARY LANE FOR LEFT TURNS, AND THE MEDIAN ON THE RIGHT SIDE WILL HAVE THE SAME CONFIGURATION AS THE ONE ON THE LEFT SIDE ROTATED 180 DEGREES.

2. **B = A + 14' (40' MIN.)**

REV NO.	DATE	BY	APPR
1	8/04	RAW	MHA
2	3/06	RAW	MHA
3	2/07	RAW	MHA
4	8/08	RAW	MHA
5	7/14	RAW	MHA
6	9/21	RAW	MHA

PUBLIC WORKS – STREETS AND TRANSPORTATION

APPROVED BY: M H Abdalla
ENGINEER MANAGER

APPROVED DATE: 9/1/2021

CITY OF Vancouver WASHINGTON

MEDIAN OPENINGS FOR INTERSECTIONS

STANDARD PLAN NUMBER

T04–06

I:\CITYAPPS\AUTOCAD\STD_DETAILS\DRAWING_FILES\T04–06

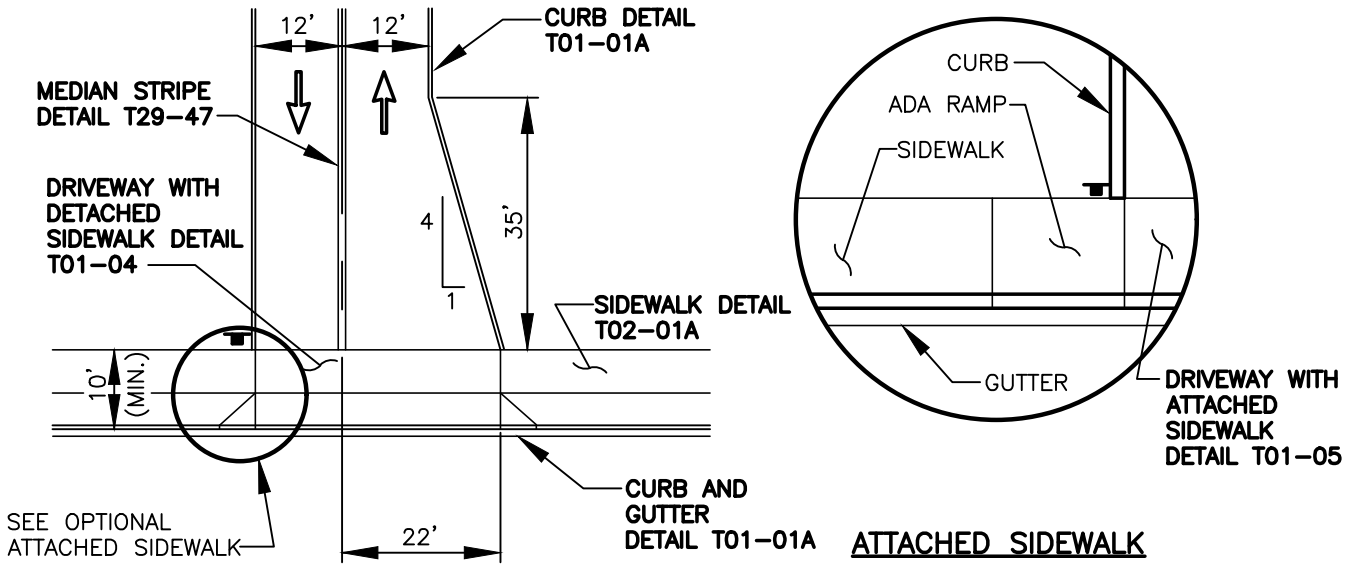

ATTACHED SIDEWALK

MULTI-FAMILY UNITS LOW VOLUME (M-1)

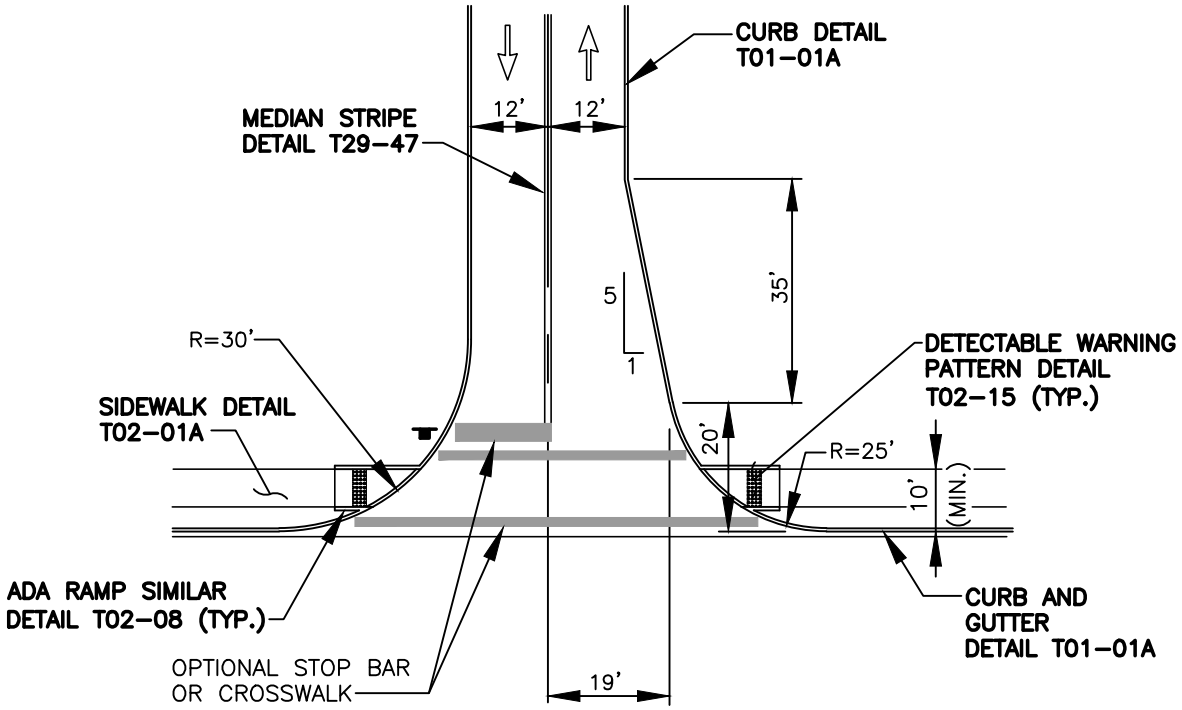

MULTI-FAMILY UNITS HIGH VOLUME (M-2)

NOTES:

1. MINIMUM DRIVE LENGTH IS 20 FEET, MEASURED FROM THE BACK OF SIDEWALK TO THE ENTRANCE OF THE OFF STREET PARKING AREA.
2. DIMENSIONS MAY VARY WITH ANALYSIS OF THE TURNING MOVEMENTS OF THE TYPICAL VEHICLE.

REV NO.	DATE	BY	APPR
1	3/06	RAW	MHA
2	2/07	RAW	MHA
3	8/08	RAW	MHA
4	7/14	RAW	MHA
5	3/17	RAW	MHA
6	9/21	RAW	MHA

PUBLIC WORKS – STREETS AND TRANSPORTATION

APPROVED BY: M H Abdalla
ENGINEER MANAGER

APPROVED DATE: 9/1/2021

CITY OF Vancouver WASHINGTON

RESIDENTIAL DRIVEWAYS

STANDARD PLAN NUMBER

T04-07

I:\CITYAPPS\AUTOCAD\STD_DETAILS\DRAWING_FILES\T04-07

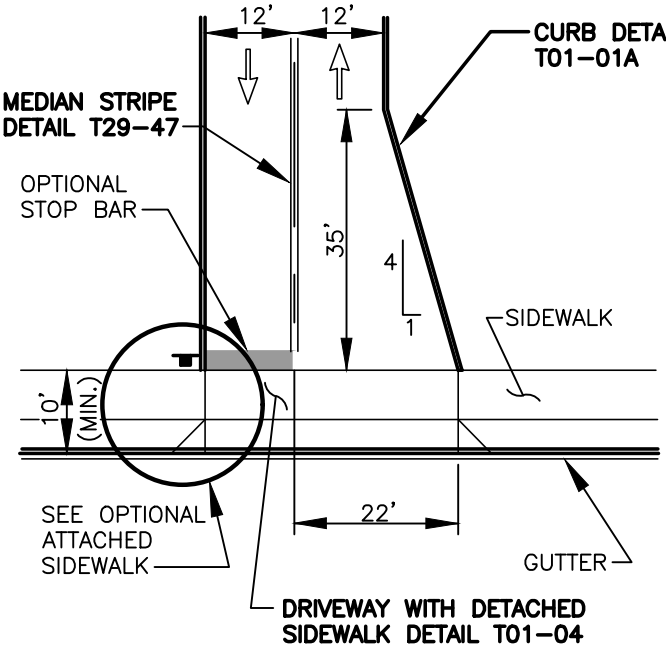

TWO-WAY INGRESS (CL-1)

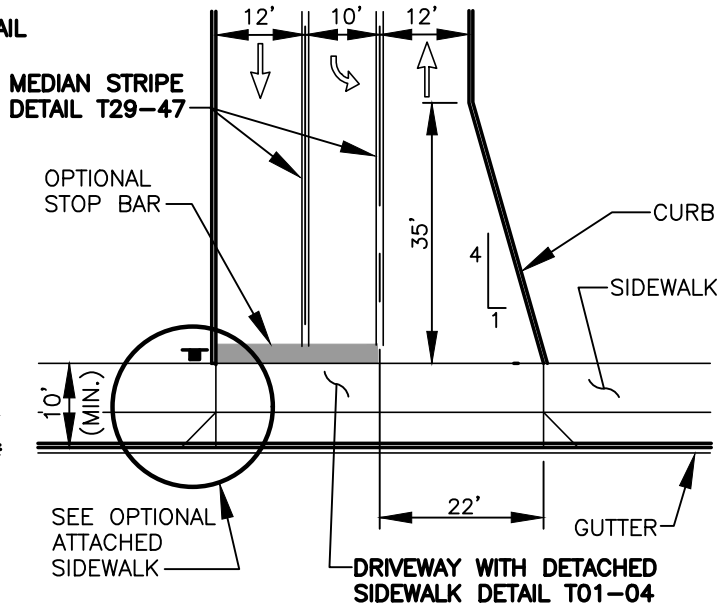

TWO-WAY TWO EGRESS LANES (CL-2)

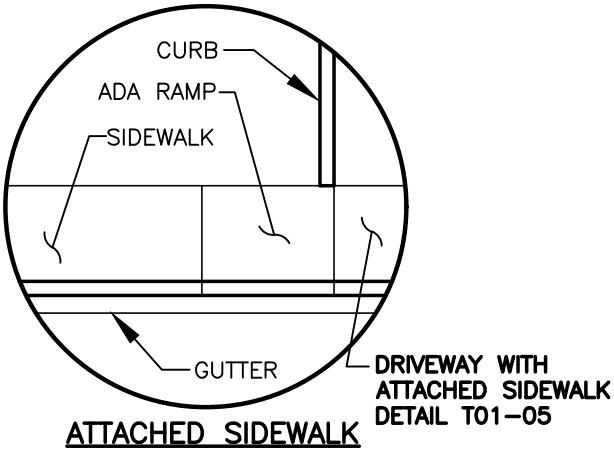

ATTACHED SIDEWALK

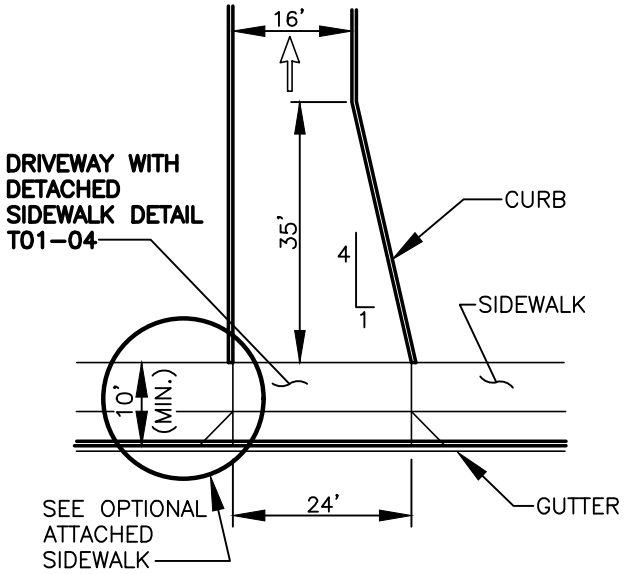

ONE-WAY INGRESS (CL-3)

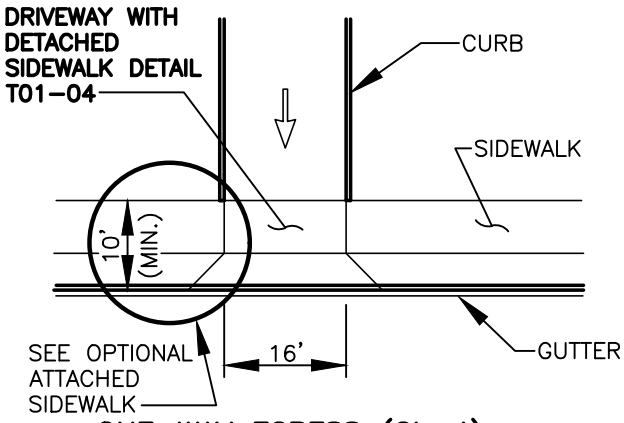

ONE-WAY EGRESS (CL-4)

NOTES:

1. MINIMUM DRIVE LENGTH IS 20 FEET, MEASURED FROM THE BACK OF SIDEWALK TO THE ENTRANCE OF THE OFF STREET PARKING AREA.
2. DIMENSIONS MAY VARY WITH ANALYSIS OF THE TURNING MOVEMENTS OF THE TYPICAL VEHICLE.

REV NO.	DATE	BY	APPR
1	3/06	RAW	MHA
2	2/07	RAW	MHA
3	8/08	RAW	MHA
4	7/14	RAW	MHA
5	3/17	RAW	MHA
6	9/21	RAW	MHA

PUBLIC WORKS – STREETS AND TRANSPORTATION

APPROVED BY: M H Abdalla
ENGINEER MANAGER

APPROVED DATE: 9/1/2021

CITY OF Vancouver WASHINGTON

COMMERCIAL/LOW VOLUME DRIVEWAYS

STANDARD PLAN NUMBER

T04-08

I:\CITYAPPS\AUTOCAD\STD_DETAILS\DRAWING_FILES\T04-08

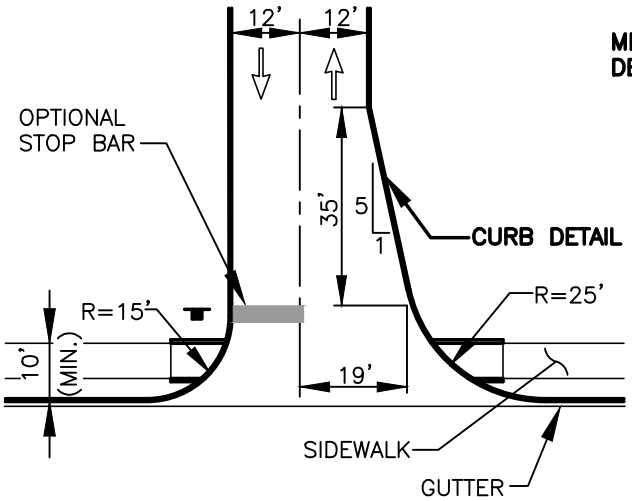

TWO-WAY (CH-1)

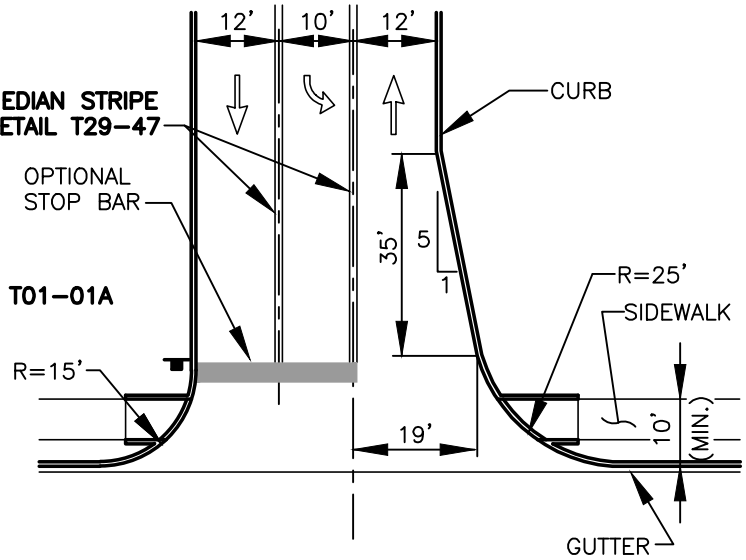

TWO-WAY WITH TWO EGRESS LANES (CH-2) ①②

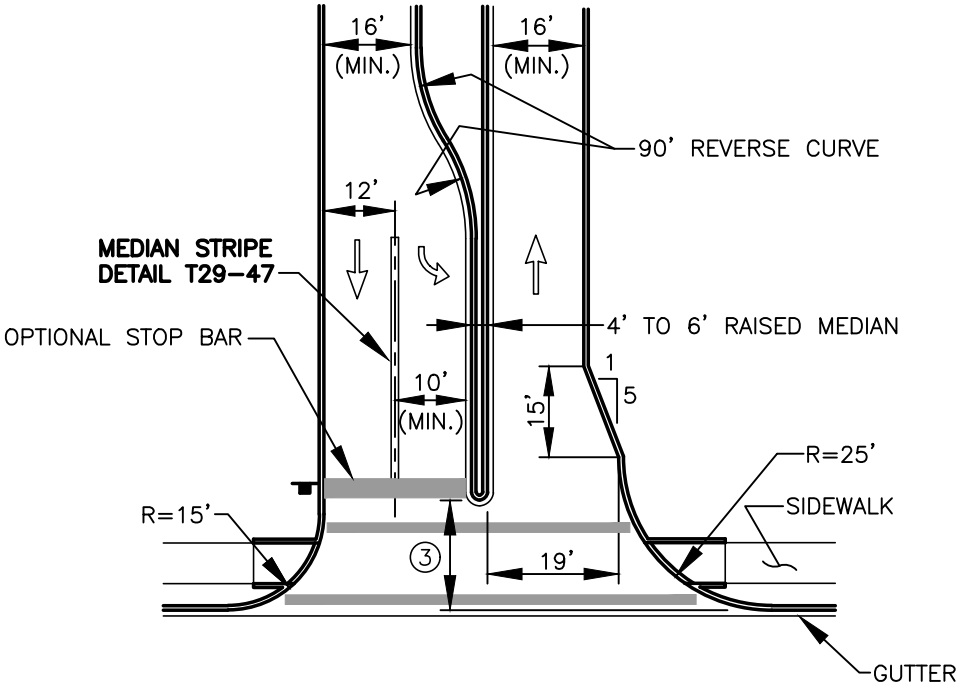

TWO-WAY RAISED MEDIAN (CH-3) ①②

① PREFERRED TWO-WAY DRIVE OPPOSITE MEDIAN OPENINGS.

② PREFERRED TWO WAY DRIVE FOR INDUSTRIAL USES ON HIGH VOLUME STREETS.

③ RAISED MEDIAN SET BACK FROM STREET TO ALLOW PEDESTRIAN TRAFFIC.

NOTES:

1. MINIMUM DRIVE LENGTH IS 20 FEET, MEASURED FROM THE BACK OF SIDEWALK TO THE ENTRANCE OF THE OFF STREET PARKING AREA.
2. DIMENSIONS MAY VARY WITH ANALYSIS OF THE TURNING MOVEMENTS OF THE TYPICAL VEHICLE.

I:\CITYAPPS\AUTOCAD\STD_DETAILS\DRAWING_FILES\T04-09

REV NO.	DATE	BY	APPR
1	3/06	RAW	MHA
2	2/07	RAW	MHA
3	8/08	RAW	MHA
4	7/14	RAW	MHA
5	3/17	RAW	MHA
6	9/21	RAW	MHA

PUBLIC WORKS – STREETS AND TRANSPORTATION

APPROVED BY: M H Abdalla
ENGINEER MANAGER

APPROVED DATE: 9/1/2021

CITY OF Vancouver WASHINGTON

COMMERCIAL/HIGH VOLUME TWO-WAY DRIVEWAYS

STANDARD PLAN NUMBER

T04-09

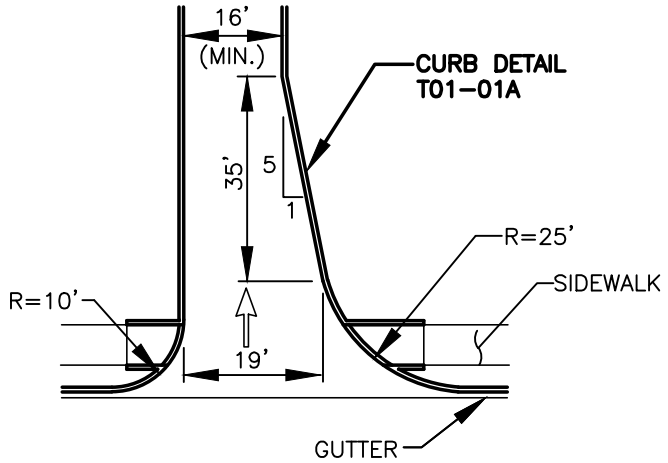

ONE-WAY INGRESS (CI-1)

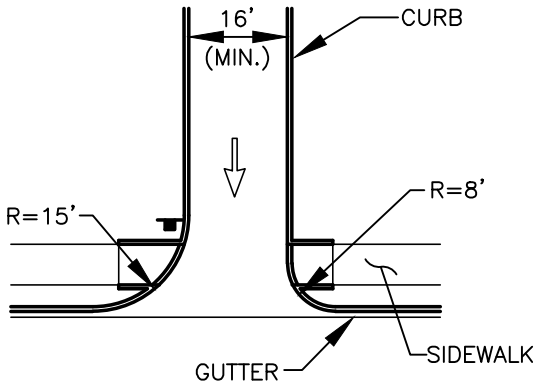

ONE-WAY EGRESS (CI-2)

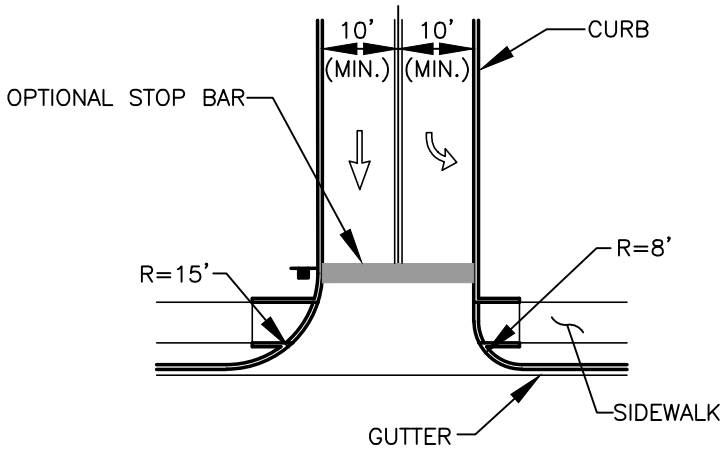

TWO LANES ONE-WAY EGRESS
(CI-3)

NOTES:

1. MINIMUM DRIVE LENGTH IS 20 FEET, MEASURED FROM THE BACK OF SIDEWALK TO THE ENTRANCE OF THE OFF STREET PARKING AREA.

2. DIMENSIONS MAY VARY WITH ANALYSIS OF THE TURNING MOVEMENTS OF THE TYPICAL VEHICLE.

REV NO.	DATE	BY	APPR
1	3/06	RAW	MHA
2	2/07	RAW	MHA
3	8/08	RAW	MHA
4	7/14	RAW	MHA
5	3/17	RAW	MHA
6	9/21	RAW	MHA

PUBLIC WORKS – STREETS AND TRANSPORTATION

APPROVED BY: M H Abdalla
ENGINEER MANAGER

APPROVED DATE: 9/1/2021

CITY OF Vancouver WASHINGTON

COMMERCIAL/HIGH VOLUME ONE-WAY DRIVEWAYS

STANDARD PLAN NUMBER

T04-10

I:\CITYAPPS\AUTOCAD\STD_DETAILS\DRAWING_FILES\T04-10

STREET TYPE	L
MAJOR ARTERIAL	50'
MINOR ARTERIAL	40'
COLLECTOR ARTERIAL	50'

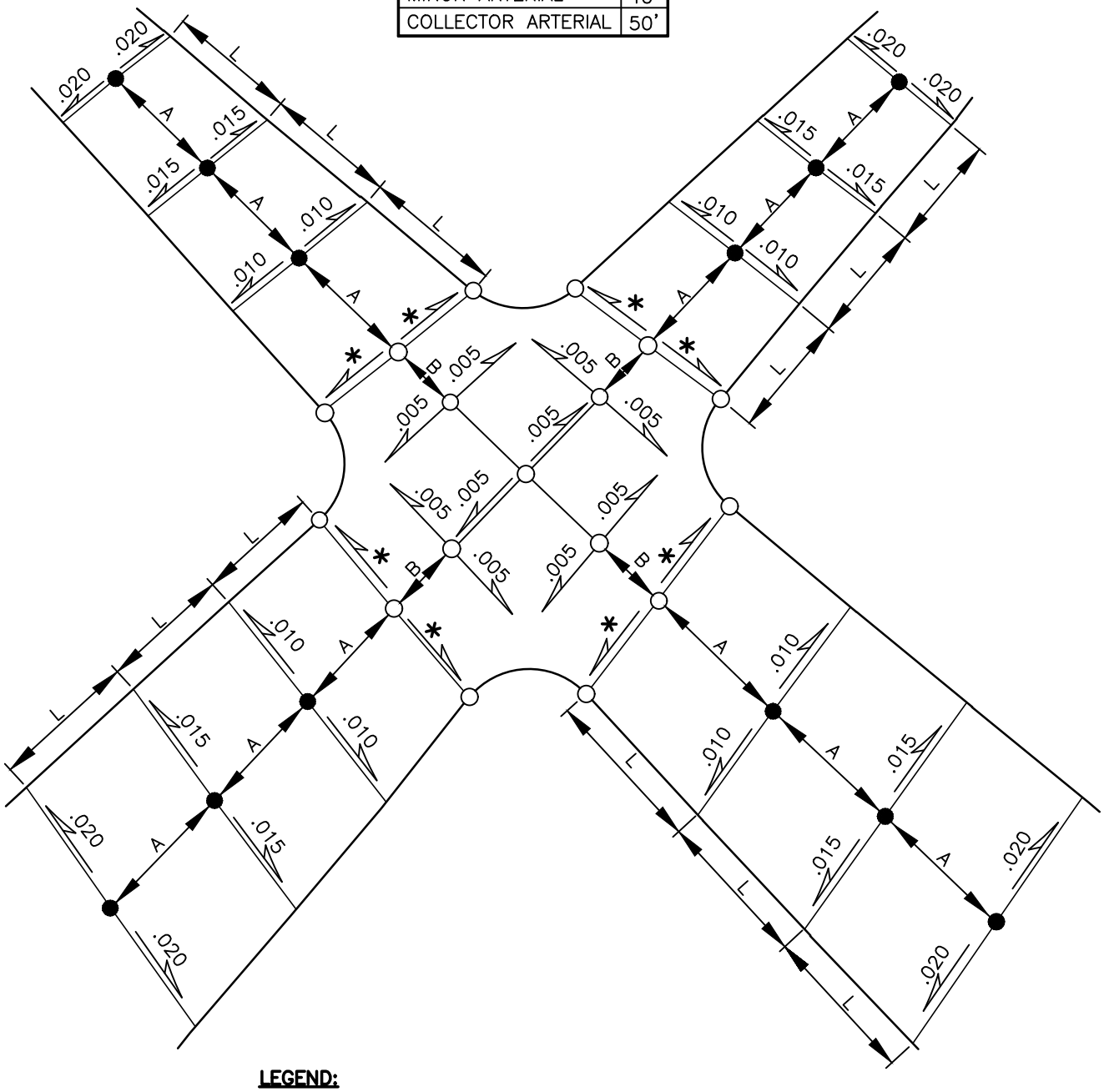

LEGEND:

- * = AS REQUIRED TO MATCH PROPORTIONATE CHANGE
- A = NORMAL CENTERLINE GRADE
- B = NOT TO EXCEED .005 IN EITHER DIRECTION
- ● = GRADE BREAK GREATER THAN .01 MAY REQUIRE VERTICAL CURVE
- ○ = GRADE BREAK NOT TO EXCEED .01

NOTE:

SLOPES ARE EXPRESSED IN FT./FT.

REV NO.	DATE	BY	APPR
1	8/04	RAW	MHA
2	3/06	RAW	MHA
3	2/07	RAW	MHA
4	8/08	RAW	MHA
5	7/14	RAW	MHA
6	9/21	RAW	MHA

PUBLIC WORKS – STREETS AND TRANSPORTATION

APPROVED BY: M H Abdalla
ENGINEER MANAGER

APPROVED DATE: 9/1/2021

CITY OF Vancouver WASHINGTON

INTERSECTION CROSS SLOPES AND CROWN RUN–OFF

STANDARD PLAN NUMBER

T04–11

I:\CITYAPPS\AUTOCAD\STD_DETAILS\DRAWING_FILES\T04-11

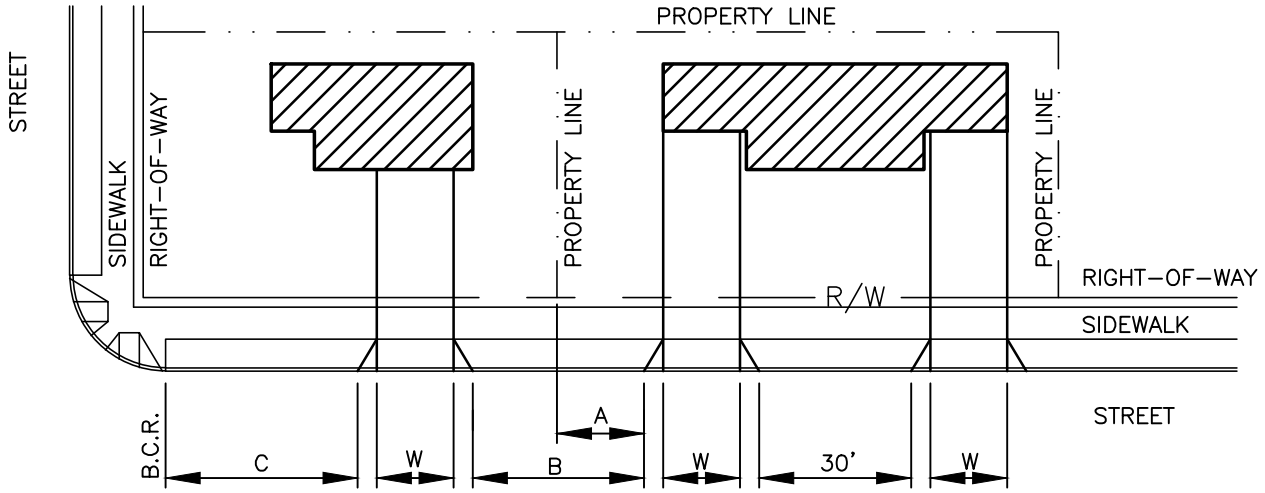

	MINIMUM DISTANCE
A	5 FEET
B	10 FEET
C	30 FEET
W	DRIVEWAY WIDTH

NON-ARTERIAL STREETS – RESIDENTIAL POLICY
REGULATIONS FOR CURB OPENING AND DRIVEWAYS

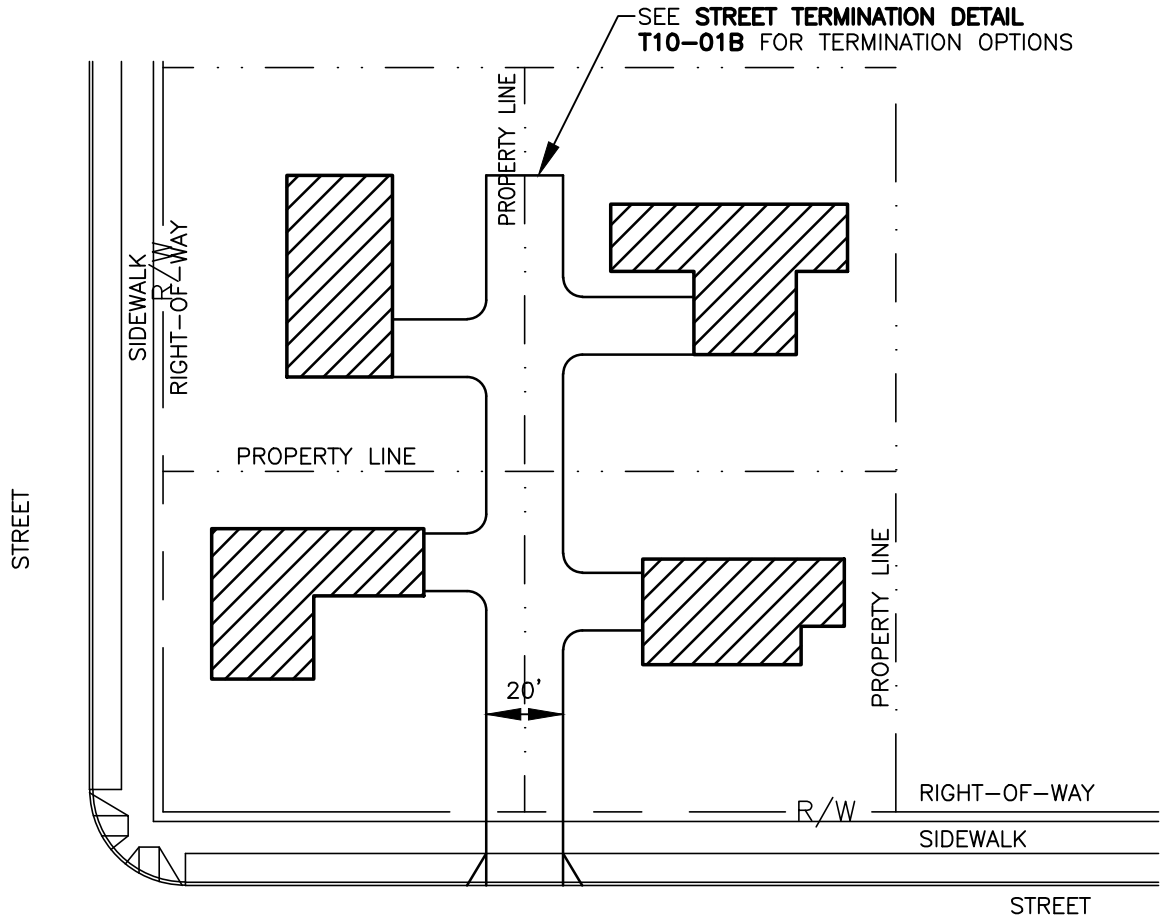

NON-ARTERIAL STREETS – RESIDENTIAL POLICY
FLAG-STEM AND SHARED DRIVEWAYS

REV NO.	DATE	BY	APPR
1	8/04	RAW	MHA
2	3/06	RAW	MHA
3	2/07	RAW	MHA
4	8/08	RAW	MHA
5	7/14	RAW	MHA
6	9/21	RAW	MHA

PUBLIC WORKS – STREETS AND TRANSPORTATION

APPROVED BY: M H Abdalla
ENGINEER MANAGER

APPROVED DATE: 9/1/2021

CITY OF Vancouver WASHINGTON

NON-ARTERIAL STREET DRIVEWAY POLICY

STANDARD PLAN NUMBER

T04-12

I:\CITYAPPS\AUTOCAD\STD_DETAILS\DRAWING_FILES\T04-12

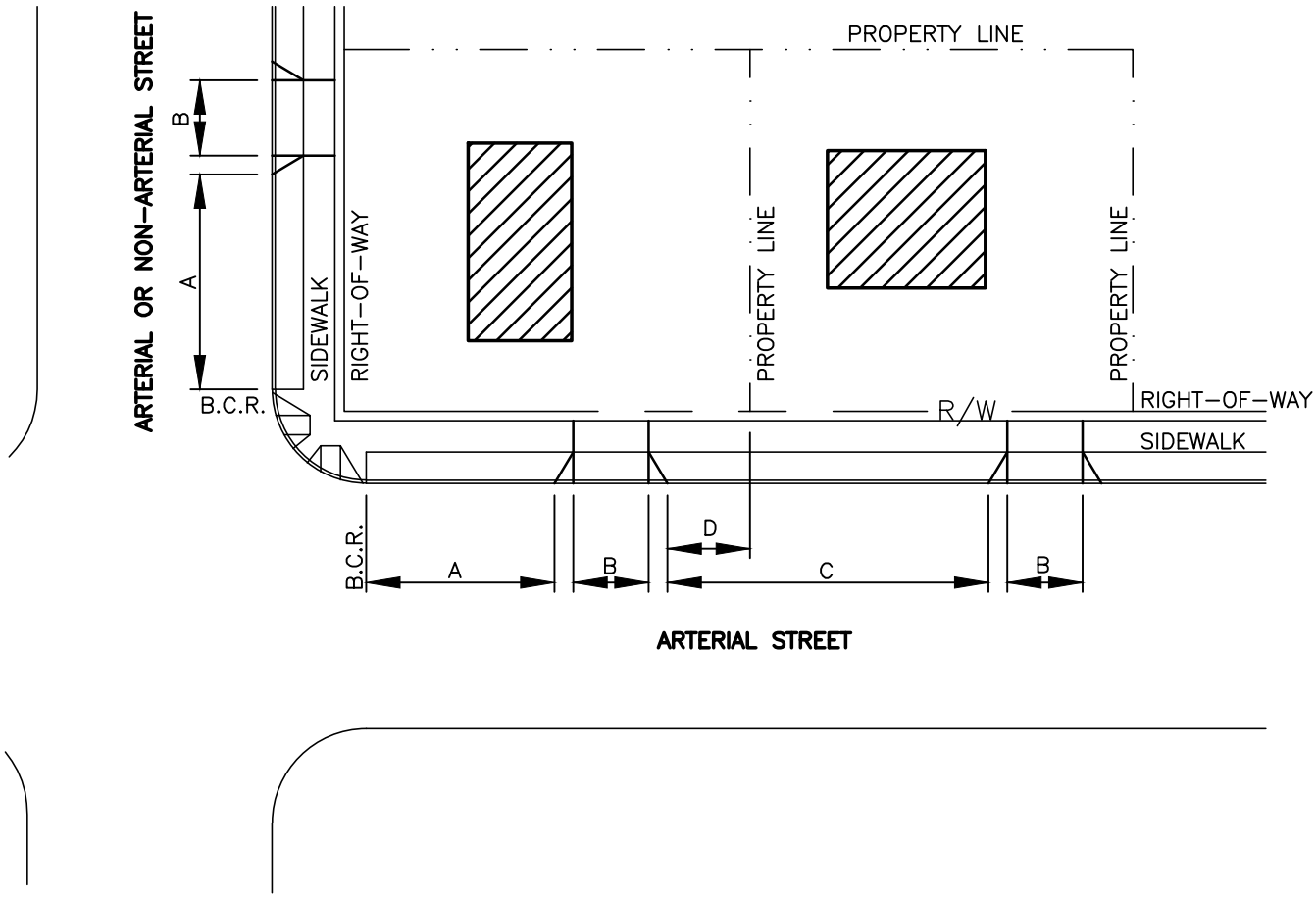

TYPE OF ARTERIAL	A	B (3)	C	D (2)
PRINCIPAL	115'	30' (1)	115'	20'
MINOR	75'	30'	75'	15'
COLLECTOR	50'	25'	50'	10'

LEGEND:

(1) IF 3 LANES ARE PROPOSED, DRIVEWAY WIDTH MAY BE 40'.

(2) SHARED DRIVEWAYS AT PROPERTY LINES ARE ENCOURAGED.

(3) SEE VMC 11.90.110.A FOR ADDITIONAL INFORMATION.

A = DISTANCE FROM CORNER BACK-OF-CURB-RETURN TO DRIVEWAY.

B = DRIVEWAY WIDTH. DISTANCE BETWEEN DRIVEWAYS.

C = DISTANCE BETWEEN DRIVEWAYS.

D = DISTANCE FROM PROPERTY LINE.

RESIDENTIAL/COMMERCIAL DRIVEWAY WIDTHS FOR ARTERIAL STREETS

REV NO.	DATE	BY	APPR
1	8/04	RAW	MHA
2	3/06	RAW	MHA
3	2/07	RAW	MHA
4	8/08	RAW	MHA
5	7/14	RAW	MHA
6	9/21	RAW	MHA

PUBLIC WORKS – STREETS AND TRANSPORTATION

APPROVED BY: M H Abdalla
ENGINEER MANAGER

APPROVED DATE: 9/1/2021

CITY OF Vancouver WASHINGTON

ARTERAIL STREETS RESIDENTIAL/COMMERCIAL DRIVEWAY WIDTHS

STANDARD PLAN NUMBER

T04-13

I:\CITYAPPS\AUTOCAD\STD_DETAILS\DRAWING_FILES\T04-13

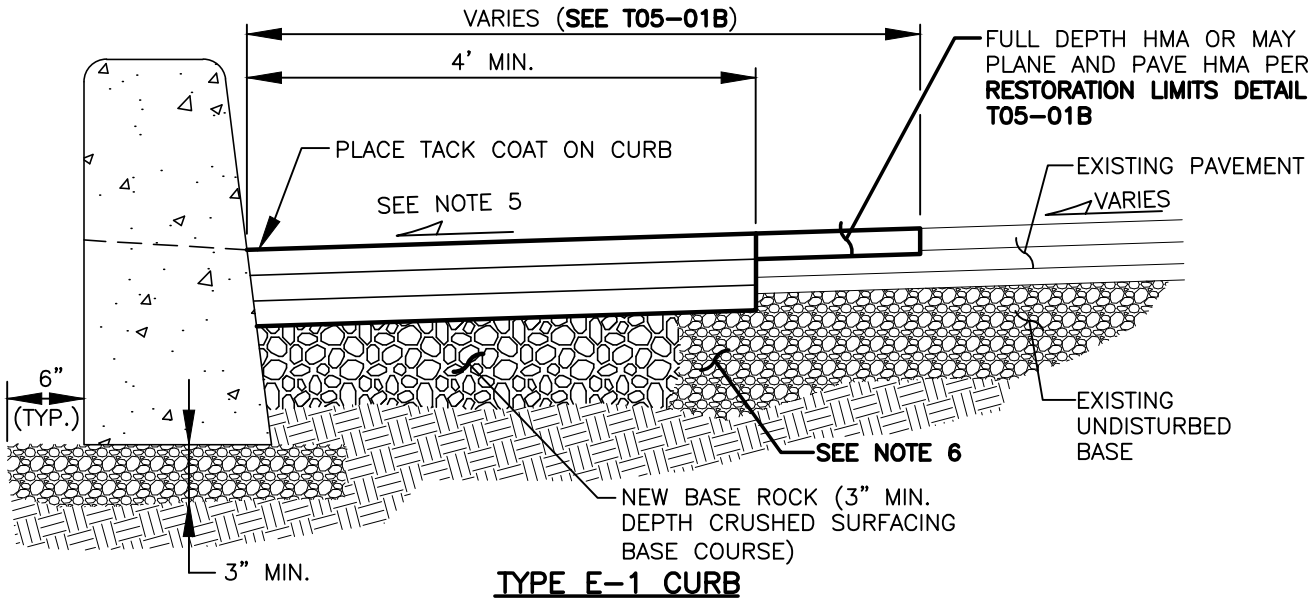

TYPE E–1 CURB

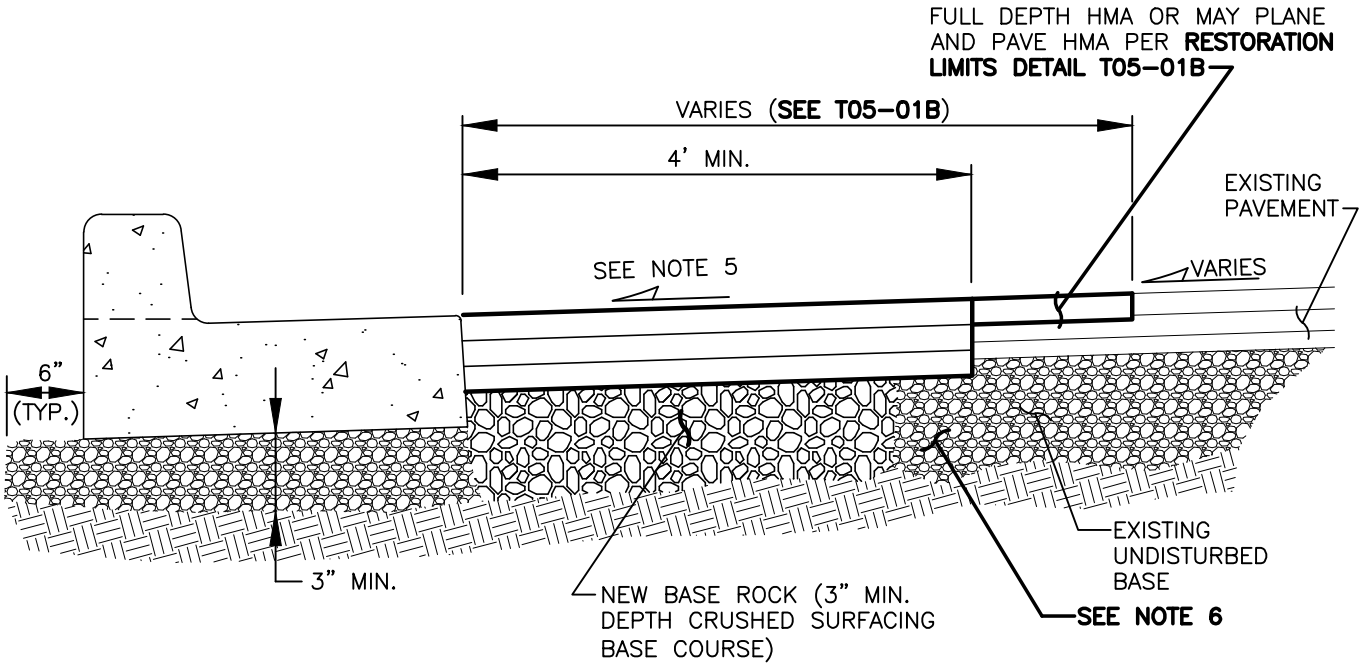

TYPE A–1 CURB AND GUTTER

NOTES:

1. SEE **CONCRETE CURBS DETAIL T01–01A** FOR CURBS.
2. SEE **STANDARD TRENCH RESTORATION NOTES (PAGE 1 OF 2) T05–04A** FOR HMA AND BASE ROCK THICKNESS CHARTS. MINIMUM LIFT THICKNESS SHALL BE 0.15'. MAXIMUM LIFT THICKNESS SHALL BE 0.35' FOR BASE COURSES AND 0.25' FOR WEARING COURSE.
3. THE EDGES OF ALL EXISTING ASPHALT SURFACES SHALL BE CLEANED AND A TACK COAT SHALL BE APPLIED PER THE STANDARD SPECIFICATIONS. ALL JOINTS SHALL BE SEALED WITH HEATED PAVING ASPHALT AND SANDED DAY OF PAVING.
4. COMPACT SUBGRADE AND CRUSHED SURFACING BASE COURSE TO 95% MAXIMUM DRY DENSITY (3" MIN. DEPTH).
5. MATCH EXISTING PAVEMENT CROSS SLOPE FROM CENTERLINE. SLOPES STEEPER THAN 4% WILL NOT BE ALLOWED WITHOUT SPECIFIC CITY APPROVAL.
6. SAWCUT AND REMOVE THE FULL EXISTING DEPTH OF ASPHALT A MIN. OF 6" OUT FROM THE NEW BASE ROCK SECTION. THIS REMOVAL MAY BE EXTENDED OUT TO THE LANE LINE INSTEAD OF PLANING.

REV NO.	DATE	BY	APPR
1	2/07	RAW	MHA
2	8/08	RAW	MHA
3	7/14	RAW	MHA
4	3/17	RAW	MHA
5	4/18	RAW	MHA
6	9/21	RAW	MHA

PUBLIC WORKS – STREETS AND TRANSPORTATION

APPROVED BY: M H Abdalla
ENGINEER MANAGER

APPROVED DATE: 9/1/2021

CITY OF Vancouver WASHINGTON

PAVEMENT RESTORATION/ WIDENING AT CURBS

STANDARD PLAN NUMBER

T05–01A

I:\CITYAPPS\AUTOCAD\STD_DETAILS\DRAWING_FILES\T05–01A

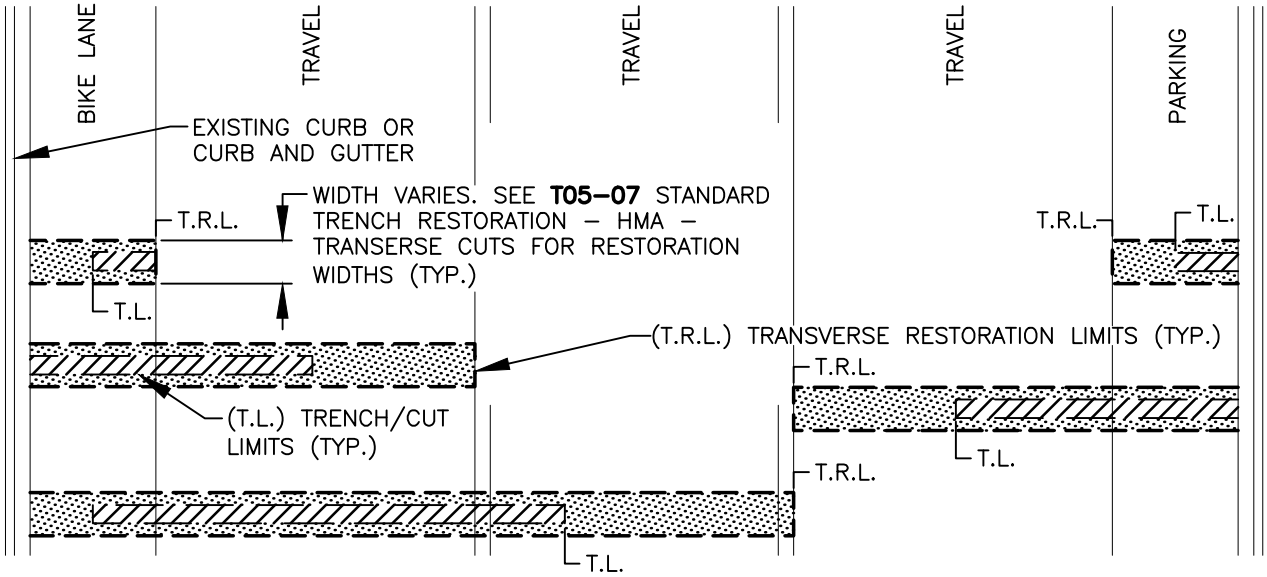

TRANSVERSE CUTS

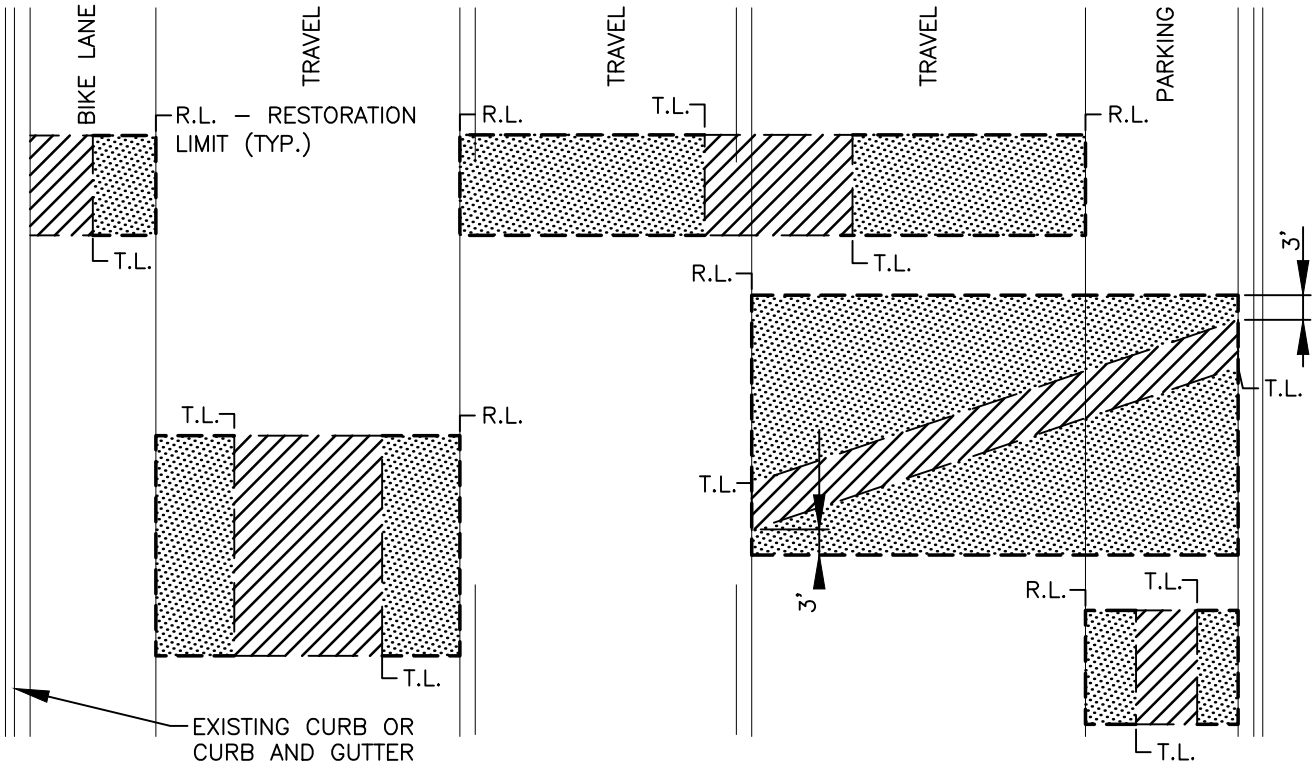

LONGITUDINAL CUTS

NOTES:

1. APPLIES TO ARTERIALS, COLLECTOR ARTERIALS, INDUSTRIAL STREETS AND STREETS IN THE CX ZONE. IT WILL BE REQUIRED ON RESIDENTIAL STREETS WITH A PCI LESS THAN 50 OR GREATER THAN 70 OR AS DIRECTED BY THE ENGINEER.

2. AREAS OUTSIDE OF T–CUT OF TRENCH OR OTHER STREET CUTS SHALL BE PLANED AND PAVED TO NEAREST LANE LINE REGARDLESS OF WHERE CUT FALLS WITHIN THE LANE. DEPTH OF PLANE AND INLAY TO MATCH DEPTH OF EXISTING TOP LIFT PLUS 1/4". DEPTH TO BE NO LESS THAN 0.25' OR AS DIRECTED BY ENGINEER.

3. THE RESTORATION REQUIREMENTS SHOWN ARE MINIMUMS. ADDITIONAL RESTORATION MAY BE REQUIRED BY THE ENGINEER. FULL DEPTH REMOVAL AND REPLACEMENT OF ACP IN LIEU OF GRIND MAY BE ALLOWED PER DIRECTION OF ENGINEER.

4. NO REMNANT ASPHALT 4' OR LESS PER NOTE 5 ON **STANDARD TRENCH RESTORATION – NOTES T05–04A**.

REV NO.	DATE	BY	APPR
1	8/08	RAW	MHA
2	7/14	RAW	MHA
3	3/16	RAW	MHA
4	3/17	RAW	MHA
5	4/18	RAW	MHA
6	9/21	RAW	MHA

PUBLIC WORKS – STREETS AND TRANSPORTATION

APPROVED BY: M H Abdalla
ENGINEER MANAGER

APPROVED DATE: 9/1/2021

CITY OF Vancouver WASHINGTON

PAVEMENT RESTORATION LIMITS

STANDARD PLAN NUMBER

T05–01B

I:\CITYAPPS\AUTOCAD\STD_DETAILS\DRAWING_FILES\T05-01B

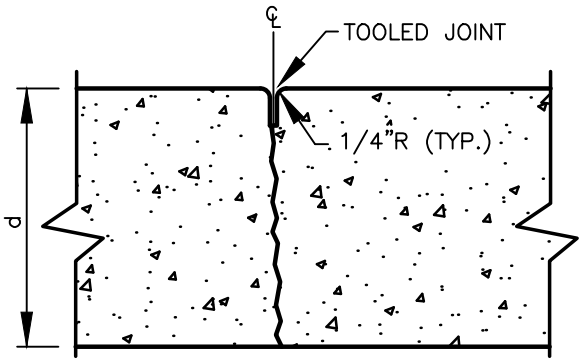

SURFACE JOINT

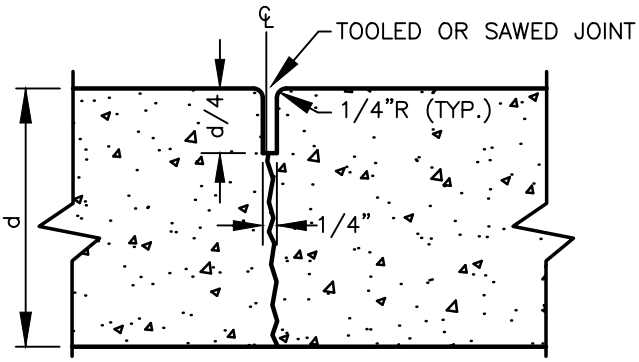

CONTRACTION JOINT

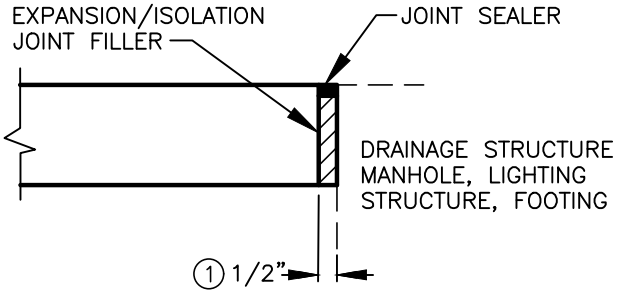

EXPANSION/ISOLATION JOINT DETAIL

① 3/8" JOINT FILLER FOR SIDEWALKS, ADA RAMPS, AND DRIVEWAYS

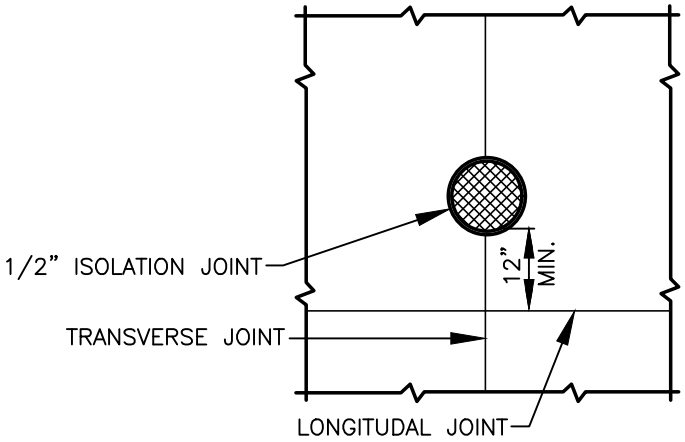

MANHOLES

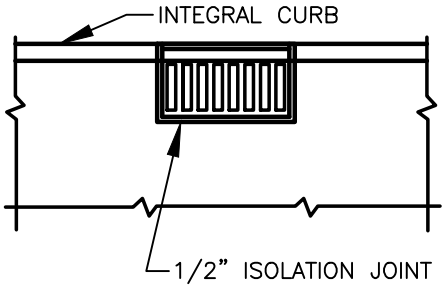

CATCH BASINS

NOTES:

1. CONTRACTION JOINTS MAY BE USED IN PLACE OF SURFACE JOINTS.
2. CONSTRUCTION COLD JOINTS MAY BE USED IN PLACE OF CONTRACTION JOINTS.
3. CONCRETE PAVEMENT LOAD TRANSFER REQUIREMENTS ACROSS JOINTS SHALL BE DETERMINED BY PCC PAVEMENT DESIGN.
4. PARALLEL JOINTS SHALL BE SEPARATED BY A MINIMUM OF 2'.

REV NO.	DATE	BY	APPR
1	8/04	RAW	MHA
2	3/06	RAW	MHA
3	2/07	RAW	MHA
4	8/08	RAW	MHA
5	7/14	RAW	MHA
6	9/21	RAW	MHA

PUBLIC WORKS – STREETS AND TRANSPORTATION

APPROVED BY: M H Abdalla
ENGINEER MANAGER

APPROVED DATE: 9/1/2021

CITY OF Vancouver WASHINGTON

CONCRETE JOINTS

STANDARD PLAN NUMBER

T05–02

I:\CITYAPPS\AUTOCAD\STD_DETAILS\DRAWING_FILES\T05-02

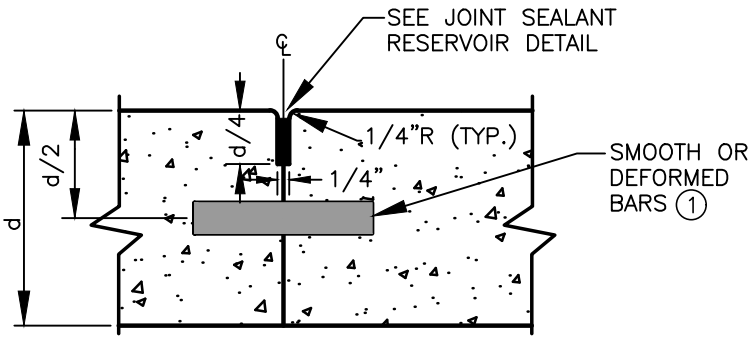

FIXED AND WORKING CONSTRUCTION JOINT DETAIL

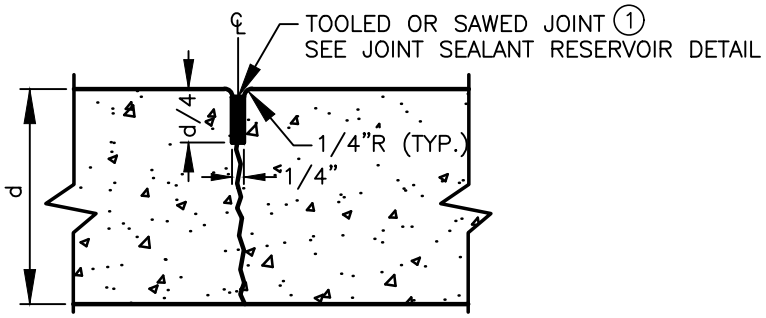

SEALED CONTRACTION JOINT

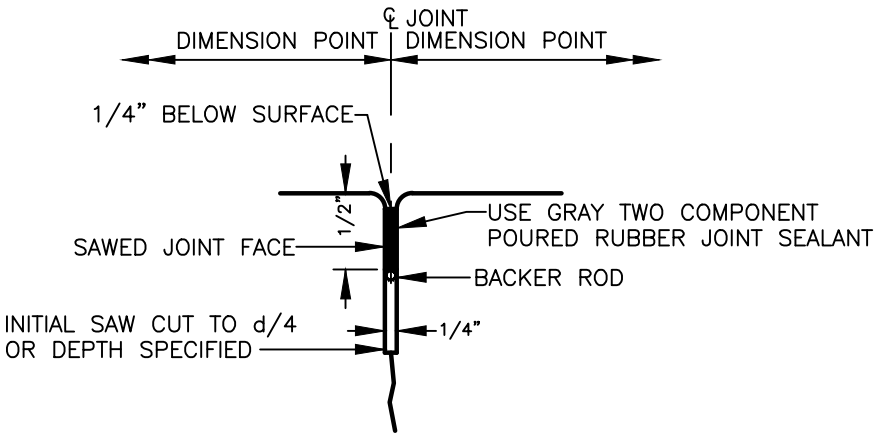

JOINT SEALANT RESERVOIR

NOTE:

1. CONCRETE PAVEMENT LOAD TRANSFER REQUIREMENTS ACROSS JOINTS SHALL BE DETERMINED BY PCC PAVEMENT DESIGN.

REV NO.	DATE	BY	APPR
1	8/04	RAW	MHA
2	3/06	RAW	MHA
3	2/07	RAW	MHA
4	8/08	RAW	MHA
5	7/14	DJM	MHA
6	9/21	RAW	MHA

PUBLIC WORKS – STREETS AND TRANSPORTATION

APPROVED BY: M H Abdalla
ENGINEER MANAGER

APPROVED DATE: 9/1/2021

CITY OF Vancouver WASHINGTON

CONCRETE PATCH JOINTS

STANDARD PLAN NUMBER

T05–03

I:\CITYAPPS\AUTOCAD\STD_DETAILS\DRAWING_FILES\T05-03

GENERAL NOTES:

1. ALL MATERIALS AND WORKMANSHIP SHALL BE IN ACCORDANCE WITH THE STANDARD SPECIFICATIONS, EXCEPT WHERE OTHERWISE NOTED IN THESE STANDARDS. MATERIALS AND WORKMANSHIP SHALL BE IN CONFORMANCE WITH THE CURRENT EDITION OF THE STANDARD SPECIFICATIONS FOR ROAD, BRIDGE, AND MUNICIPAL CONSTRUCTION PREPARED BY THE WASHINGTON STATE CHAPTER OF THE AMERICAN PUBLIC WORKS ASSOCIATION (APWA) AND THE WASHINGTON STATE DEPARTMENT OR TRANSPORTATION (WSDOT). REFERENCE TO ENGINEER IN SPECIFICATIONS IS DEFINED AS CITY OF VANCOUVER ENGINEER.

2. A FORTY–EIGHT (48) HOUR MINIMUM NOTICE SHALL BE GIVEN TO THE ENGINEER PRIOR TO PAVING UNLESS A LESSER TIME IS APPROVED BY THE ENGINEER.

3. AN ALTERNATE PEDESTRIAN ACCESSIBLE ROUTE OF TRAVEL IS REQUIRED WHEN AN EXISTING ACCESSIBLE ROUTE IS BLOCKED DURING CONSTRUCTION. THE ALTERNATE ACCESSIBLE ROUTE SHALL MEET MIN. ACCESSIBLE STANDARDS AS SET FORTH IN THE LATEST VERSION OF THE AMERICANS WITH DISABILITIES ACT ACCESSIBILITY GUIDELINES (ADAAG) MANUAL.

4. TRENCH BACKFILL AND RESURFACING SHALL BE AS SHOWN IN THE STANDARD DETAILS, UNLESS MODIFIED BY THE RIGHT OF WAY USE PERMIT OR FRANCHISE – UTILITY STREET/RIGHT OF WAY PERMIT. SURFACING DEPTHS AND PAVING LIMITS SHOWN IN THE STANDARD DETAILS ARE MINIMUMS AND MAY BE INCREASED BY THE ENGINEER TO MEET TRAFFIC LOADINGS OR SITE CONDITIONS.

STREET SECTIONS FOR AASHTO SOIL TYPES A1–A5 – ALL OTHER SOIL TYPES SEE STREET SECTION DETAIL FOR STREET CLASSIFICATION

CLASSIFICATION	ASPHALT THICKNESS	BASE ROCK THICKNESS
PRINICIPAL ARTERIALS	0.85	0.85
MINOR ARTERIALS/3 LANE COLLECTOR ARTERIALS	0.75	0.85
COLLECTOR ARTERIALS	0.60	0.65
PRIMARY INDUSTRIAL 5 LANE	0.85	0.85
PRIMARY INDUSTRIAL 3 LANE	0.80	0.85
SECONDARY INDUSTRIAL 3 LANE	0.70	0.85
LOCAL INDUSTRIAL 2 LANE	0.65	0.75
NEIGHBORHOOD CIRCULATOR, LOCAL ACCESS (NON–RESIDENTIAL)	0.40	0.85
LOCAL ACCESS (RESIDENTIAL), LOOP/CUL–DE–SAC, PUBLIC ALLEY, PRIVATE STREET >4 DWELLINGS, APPROVED NARROW LOT STREET/ALLEY	0.40	0.75
PRIVATE STREET 1–4 DWELLINGS (NO CURBS) AND PRIVATE ALLEY	0.25	0.65

5. ON ALL STREETS WHERE 4 FEET OR LESS OF PAVEMENT REMAINS BETWEEN THE OUTSIDE OF A LONGITUDINAL TRENCH AND THE EDGE OF PAVEMENT OR THE CURB, THE PAVEMENT MUST BE REMOVED AND THE FULL DEPTH RESTORATION MUST BE FROM THE CUT NEAREST THE ROADWAY CENTER LINE TO THE CURB OR EDGE OF PAVEMENT. WHEREVER THERE IS ANY PART OF AN EXISTING PATCH WITHIN 5 FEET OF THE NEW CUT, THE OLD PATCH WILL BE INCORPORATED INTO THE NEW PAVEMENT RESTORATION. THE INCORPORATION MAY BE PART OF THE FULL DEPTH RESTORATION OR A PLANE AND ACP INLAY AS DEMONSTRATED IN THE CITY STANDARD PLANS FOR **PAVEMENT RESTORATION LIMITS T05–01B** AND **STANDARD TRENCH RESTORATION – HMA – TRANSVERSE CUTS T05–07**. RESTORATION BEYOND MINIMUM STANDARDS MAY BE REQUESTED ON STREETS WITH A PC1 RATING LESS THAN 50 OR GREATER THAN 70, REGARDLESS OF AGE OF FUNCTIONAL CLASSIFICATION. VMC 11.80.100 (D)(2)(6) AND (7).

6. THE ENGINEER MAY REQUIRE MATERIALS COMPACTION AND MOISTURE TESTING. TESTING SHALL BE PERFORMED BY A LAB PRE–APPROVED BY THE CITY'S CONSTRUCTION DIVISION WITH THE RESULTS BEING SUPPLIED TO THE ENGINEER. THE TESTING IS NOT INTENDED TO RELIEVE THE CONTRACTOR FROM ANY LIABILITY FOR THE TRENCH RESTORATION. IT IS INTENDED TO SHOW THE INSPECTOR AND THE CITY THAT THE RESTORATION MEETS THIS SPECIFICATION.

   NUMBER OF TESTS REQUIRED:
   - UNDER 50 SQ. FT. = ONE (1) (ONE TEST FOR 7 DAYS)
   - 50 TO 100 SQ. FT. = TWO (2) (ONE TEST FOR 14 DAYS)
   - 100 TO 300 SQ. FT. = THREE (3) (ONE TEST FOR 28 DAYS)
   - OVER 300 SQ. FT. = ONE (1) TEST EVERY 200 SQ. FT. OR EVERY 100 LINEAR FEET OF TRENCH, IF APPLICABLE.

GENERAL NOTES (CONTINUED):

7. WHEN TRENCHING WITHIN THE UNIMPROVED RIGHT OF WAY, THE RIGHT OF WAY SHALL BE RESTORED TO ITS ORIGINAL OR BETTER CONDITION. TRENCHES SHALL BE BACKFILLED AND COMPACTED PER THE TRENCH RESTORATION DETAILS, MATCHING THE EXISTING SURFACE.

8. ALL CUTS IN PAVED ROADS AND SHOULDERS MUST BE PERMANENTLY PATCHED IMMEDIATELY UP COMPLETION OF THE BACKFILL WORK. IN CASES OF INCLEMENT WEATHER, THE PERMANENT PATCHING MAY BE DELAYED FOR UP TO 5 DAYS AS LONG AS STEEL PLATES OR HARD SURFACE TEMPORARY PAVING ARE USED, WITH ENGINEER APPROVAL. USE OF STEEL PLATES REQUIRE BEDDING AND PINNING. IF THE WORK REQUIRES MORE THAN 1 DAY TO ACCOMPLISH, THE PORTION OF THE WORK THAT HAS BEEN COMPLETED EACH DAY MAY BE PATCHED WITH A TEMPORARY PATCH. AT THE COMPLETION OF THE WORK, ALL TEMPORARY PATCHES SHALL BE REMOVED AND THE ENTIRE AREA PERMANENTLY PATCHED. IF A GRIND AND INLAY OR OVERLAY IS REQUIRED AS PART OF THE RESTORATION, THE INLAY OR OVERLAY SHALL BE ACCOMPLISHED WITHIN 10 WORKING DAYS OF THE PERMANENT PATCHING.

   ALL JOINTS SHALL BE SAND SEALED USING HEATED PAVING ASPHALT AND SANDED SAME DAY AS PAVING. VMC 11.80.100 (D)(8).

9. WHENEVER A NEW STREET IS ACCEPTED FROM A DEVELOPER, CONSTRUCTED OR RECONSTRUCTED BY THE CITY OR A NEW SURFACE TREATMENT IS COMPLETED, A FIVE (5) YEAR STREET CUT PROHIBITION GOES INTO EFFECT. THIS WILL RESULT IN DELAYING FURTHER CONSTRUCTION WITHIN THE PAVEMENT SECTION EXCEPT IN THE EVENT OF COMPELLING CIRCUMSTANCES. VMC 11.80.100 (B).

10. CONTROL DENSITY FILL WILL BE REQUIRED WHEN STREET CUTS ARE IN ARTERIALS, COLLECTORS, INDUSTRIAL STREETS, STREETS LOCATED IN CX ZONING, CDF MAY BE REQUIRED ON OTHER STREETS WITH A PCI GREATER THAN 70. VMC 11.80.100 (C)(2)(a) AND VMC 11.80.100 (D2).

11. ALL TRAFFIC SIGNAL INTERCONNECT CONDUITS AND CABLES (COPPER OR FIBER OPTIC) SHALL BE PROTECTED DURING CONSTRUCTION ACTIVITIES. DUE TO THE IMPORTANCE OF MAINTAINING THESE COMMUNICATIONS, ANY DAMAGE TO THESE CABLES AND CONDUITS CAUSED BY THE CONTRACTOR OR ANY OF ITS AFFILIATES SHALL BE REPORTED WITHIN 2 HOURS TO OPERATIONS CENTER DISPATCH AT (360) 696-8177 AND REPAIRED WITHIN 48 HOURS UNLESS OTHERWISE APPROVED BY CITY TRAFFIC ENGINEER. IF THIS REPAIR CANNOT BE COMPLETED IN THE ALLOTTED TIME, WORK WILL BE DONE BY THE CITY OR ITS DESIGNEE AND ALL COSTS, INCLUDING ANY OVERHEAD COSTS, WILL BE INVOICED TO THE CONTRACTOR.

12. ALL TRAFFIC SIGNALS SHALL REMAIN IN OPERATION DURING CONSTRUCTION ACTIVITIES, EXCEPT AS INDICATED ON THE PLANS. ANY DAMAGES CAUSED BY THE CONTRACTOR OR ANY OF ITS AFFILIATES TO THE EXISTING TRAFFIC SIGNAL CONDUIT, WIRING, POLES, MAST ARMS, SIGNAL INDICATIONS, LOOP DETECTORS, AND OTHER RELATED COMPONENTS SHALL BE REPAIRED WITHIN 24 HOURS UNLESS OTHERWISE APPROVED BY ENGINEER. IF THIS REPAIR CANNOT BE COMPLETED IN THE ALLOTTED TIME, WORK WILL BE DONE BY THE CITY OR ITS DESIGNEE AND ALL COSTS, INCLUDING ANY OVERHEAD COSTS, WILL BE INVOICED TO THE CONTRACTOR.

13. CONTRACTOR SHALL REPORT ALL DAMAGES IMMEDIATELY TO THE CITY'S CONSTRUCTION SERVICES OFFICE AT (360)487-7750 OR CONTACT THE INSPECTOR.

14. FOR RIGHT OF WAY PERMITS, THE RESTORATION WORK SHALL HAVE A WARRANTY PERIOD OF 2 YEARS ON RESIDENTIAL STREETS AND 5 YEARS ON ARTERIAL STREETS. PUBLIC AND PRIVATE UTILITIES SHALL WARRANTY THEIR WORK FOR THE LIFE OF THE RESTORATION. THE OWNER OR UTILITY SHALL REPAIR ANY OF THE FOLLOWING DEFICIENCIES WHICH OCCUR DURING THE WARRANTY PERIOD. VMC 11.80.100 (E).

   SETTLEMENT OR BUMP: ANY SETTLEMENT OR BUMP MORE THAN 1/4 INCH LOWER OR HIGHER THAN THE ORIGINAL PAVEMENT SHALL BE REPAIRED. REPAIR MAY INCLUDE REMOVAL AND REPLACEMENT OR SKIN PATCHING AND WILL BE DETERMINED BY THE ENGINEER.

   EDGE SEPARATION: ANY SEPARATION OF THE TRENCH FROM SURROUNDING ROADWAY GREATER THAN 1/4 INCH SHALL BE CRACK SEALED WITH MATERIAL PER WSDOT STANDARD SPECIFICATIONS SECTION 9-04.2(1).

   ALLIGATOR CRACKING: ANY TRENCH PAVEMENT WHICH EXHIBITS ALLIGATOR CRACKING SHALL BE REMOVED AND REPLACED. THE REPLACEMENT SHALL BE IN CONFORMANCE WITH THE PAVEMENT REPAIR SECTION OF THE STANDARD SPECIFICATIONS.

   RAVELING: RAVELING IS DEFINED AS SURFACE DETERIORATION THAT OCCURS WHEN AGGREGATE PARTICLES ARE DISLODGED OR OXIDATION CAUSES LOSS OF ASPHALT BINDER. THE HOT MIX ASPHALT PAVEMENT LOSES IT'S SMOOTH SURFACE AND BEGINS TO APPEAR VERY OPEN AND ROUGH. MEDIUM OR HIGH SEVERITY RAVELING AS DEFINED BY THE "PAVEMENT SURFACE CONDITION FIELD RATING MANUAL FOR ASPHALT PAVEMENT" DEVELOPED BY THE NORTHWEST PAVEMENT MANAGEMENT ASSOCIATION SHALL BE PLANED AND RE-PAVED.

15. FOR PERVIOUS PAVEMENTS, PER VMC 11.80.100 (B), STREETS CONSTRUCTED WITH PERMEABLE MATERIALS WILL HAVE A STREET CUT PROHIBITION FOR THE LIFE OF THE STREET.

① HOT MIX ASPHALT CLASS 1/2" PG 58H–22 CONSTRUCTED IN ACCORDANCE SECTION 5–04 OF THE WSDOT STANDARD SPECIFICATIONS. COMPACTION SHALL BE 92% OF MAXIMUM DENSITY AS DETERMINED BY WSDOT FOP FOR AASHTO T209.

HOT MIX ASPHALT AND BASE THICKNESS PER CHART ON **T05–04A, NOTE 4**.

IF EXISTING SECTION IS GREATER THAN THE VALUE IN THE TABLE, INSTALL 1" GREATER THAN EXISTING ASPHALT THICKNESS. MINIMUM LIFT THICKNESS IS 0.15' – MAXIMUM HMA LIFT THICKNESS IS 0.35' FOR BASE COURSE, 0.25' FOR WEARING COURSE.

THE MIX TEMPERATURE SHALL BE 325 DEGREES MAXIMUM AT THE TIME OF PLANT DISCHARGE. AT THE TIME OF PLACEMENT, THE MIX TEMPERATURE SHALL BE 250 DEGREES MINIMUM.

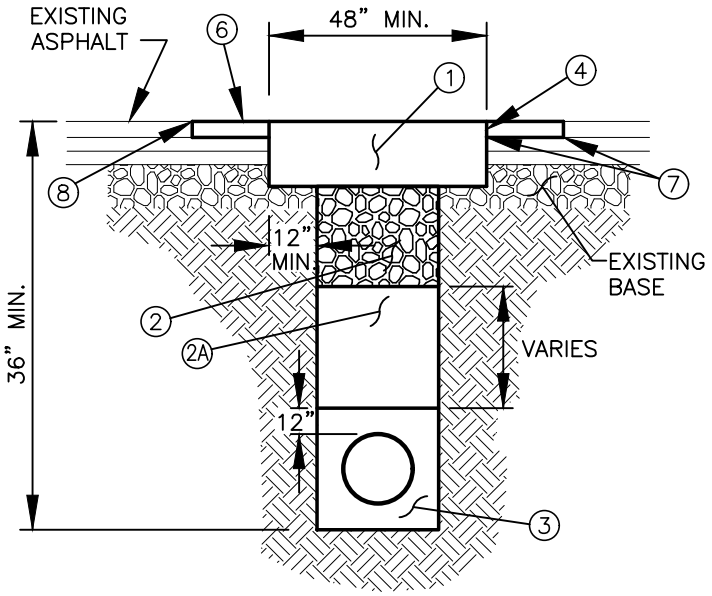

1A HARD SURFACING REQUIRED SAME DAY AS STREET OPENING ON OR WITHIN 30 FT. OF ALL ARTERIAL CLASSIFICATIONS, AND STREETS IN CX ZONING AND INDUSTRIAL AREAS. VMC 11.80.100 (D)(8).

② BASE ROCK SHALL CONSIST OF CRUSHED SURFACING BASE COURSE, MEETING THE REQUIREMENTS OF SECTION 4–04 OF THE STANDARD SPECIFICATIONS. COMPACTION SHALL BE TO 95% MAXIMUM DENSITY. EACH LIFT SHALL NOT EXCEED 0.5'.

2A TRENCH ZONE – GRAVEL BACKFILL PER WSDOT SPECIFICATIONS FOR GRAVEL BACKFILL (SECTION 9–03.10, AGGREGATE FOR GRAVEL BASE). COMPACTED TO 95% OF MAXIMUM DENSITY IN THE TRENCH ZONE USING METHOD C COMPACTION AS PER SECTION 2–03.3 (14). THE ENGINEER WILL EVALUATE THE BACKFILL BASED ON GRADATION AND MOISTURE. MATERIALS WET OF OPTIMUM MOISTURE CONTENT MAY BE REJECTED. MATERIALS DRY OF OPTIMUM MOISTURE CONTENT WILL NEED ADDITIONAL MOISTURE DURING COMPACTION.

TRENCH ZONE WIDTH
PIPE 8 IN. OR MORE = PIPE O.D. +2 FT. OR AS DIRECTED BY THE ENGINEER
PIPE 6 IN. OR LESS = PIPE O.D. +1 FT. OR AS DIRECTED BY THE ENGINEER

③ PIPE BEDDING AND PIPE ZONE BACKFILL MATERIALS SHALL BE PER UTILITY OWNERS AND/OR CITY SPECIFICATIONS. DEPTH OF COVER MAY BE ADJUSTED PER UTILITY OWNERS, AND/OR CITY SPECIFICATIONS. 90% COMPACTION PER SECTION 7–08.3(1)C OF THE STANDARD SPECIFICATIONS.

④ THE EXISTING ROAD SURFACE SHALL BE CUT IN A NEAT LINE PRIOR TO PAVEMENT REPLACEMENT BY SAWCUTTING, WHEEL CUTTER, OR PLANING EQUIPMENT. THIS WILL BE REQUIRED AROUND THE PERIMETER OF ALL EXCAVATIONS TO PROVIDE CLEAN, STRAIGHT, VERTICAL SIDES. THE CUT LINE SHALL BE ONE CONTINUOUS, FULL ASPHALT DEPTH, STRAIGHT LINE MIN. 12" FROM THE OUTER EXCAVATION LIMITS OR OF ANY SLOUGHING OF THE STREET CUT.

ALL TRENCHES SHALL BE 12" MIN. FROM EXISTING CURB TO ALLOW FOR CONSTRUCTION OF T–CUT SECTION. REMNANT ASPHALT SHALL BE REMOVED AND REPLACED PER **NOTE 5** ON **STANDARD TRENCH RESTORATION – NOTES T05–04A**.

⑤ 48" MIN. PAVEMENT RESTORATION AROUND MANHOLES, VALVES AND VAULTS MEASURED FROM EDGE PER **T05–01B**; ARTERIAL ROADWAYS, AND ROADWAYS WITH PCI GREATER THAN 70. MAY REQUIRE ADDITIONAL RESTORATION PER **T05–01B** AND **T05–07**. FOR CONCRETE RESTORATION CONTACT PAVEMENT MANAGEMENT AT (360)487–8177.

⑥ THE MINIMUM WEARING COURSE LIFT WIDTH SHALL BE EXPANDED TO LANE LINES PER STANDARD PLAN **T05–01B PAVEMENT RESTORATION LIMITS** AND/OR **T05–07** OR AS DIRECTED BY THE ENGINEER.

⑦ THE EDGES OF ALL EXISTING ASPHALT SURFACES SHALL BE CLEANED AND A TACK COAT SHALL BE APPLIED PER SECTION 5–04 OF THE STANDARD SPECIFICATIONS.

⑧ ALL JOINTS SHALL BE SEALED USING HEATED PAVING ASPHALT AND SANDED SAME DAY AS PAVING.

REV NO.	DATE	BY	APPR
1	2/07	RAW	MHA
2	8/08	RAW	MHA
3	7/14	DJM	MHA
4	4/18	RAW	MHA
5	7/19	RAW	MHA
6	9/21	RAW	MHA

PUBLIC WORKS – STREETS AND TRANSPORTATION

APPROVED BY: M H Abdalla
ENGINEER MANAGER

APPROVED DATE: 9/1/2021

CITY OF Vancouver WASHINGTON

STANDARD TRENCH RESTORATION – HMA – GRANULAR BACKFILL

STANDARD PLAN NUMBER

T05–05

I:\CITYAPPS\AUTOCAD\STD_DETAILS\DRAWING_FILES\T05–05

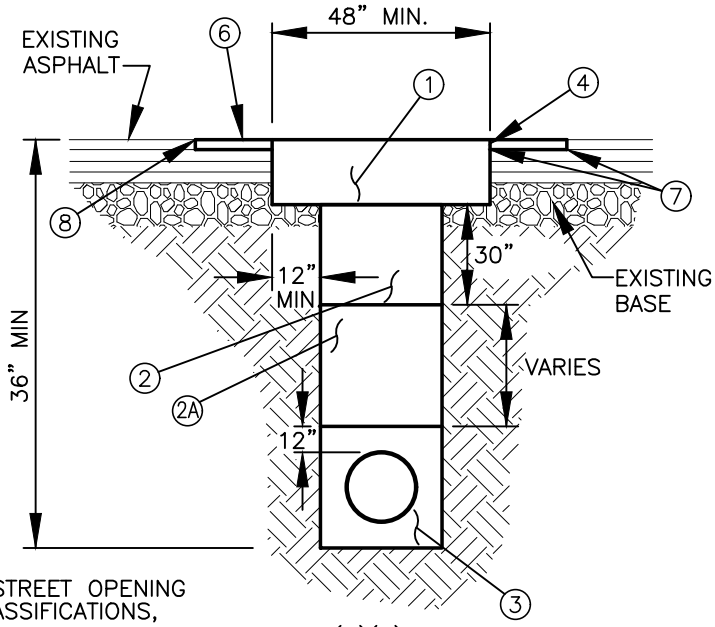

(1) HOT MIX ASPHALT CLASS 1/2" PG 58H-22 CONSTRUCTED IN ACCORDANCE WITH SECTION 5-04 OF THE STANDARD SPECIFICATIONS. COMPACTION SHALL BE 92% OF MAXIMUM DENSITY AS DETERMINED BY WSDOT FOP FOR AASHTO T209.

HOT MIX ASPHALT THICKNESS PER CHART ON **T05-04A, NOTE 4**.

IF EXISTING SECTION IS GREATER THAN THE VALUE IN THE TABLE, INSTALL 1" GREATER THAN EXISTING ASPHALT THICKNESS. MINIMUM HMA LIFT THICKNESS IS 0.15' - MAXIMUM HMA LIFT THICKNESS IS 0.35' FOR BASE COURSE, 0.25' FOR WEARING COURSE.

THE MIX TEMPERATURE SHALL BE 325 DEGREES MAXIMUM AT THE TIME OF PLANT DISCHARGE. AT THE TIME OF PLACEMENT, THE MIX TEMPERATURE SHALL BE 250 DEGREES MINIMUM.

(1A) HARD SURFACING REQUIRED SAME DAY AS STREET OPENING ON OR WITHIN 30 FT. OF ALL ARTERIAL CLASSIFICATIONS, AND STREETS IN CX ZONING AND INDUSTRIAL AREAS. VMC 11.80.100 (D)(8).

(2) BACKFILL SHALL CONSIST OF CONTROL DENSITY FILL (CDF), SEE **T05-06B** FOR **CDF TECHNICAL SPECIFICATIONS**.

GRANULAR BACKFILL MAY BE USE IN LIEU OF CDF IN TRENCHES IF APPROVED BY THE ENGINEER PRIOR TO PLACEMENT. TESTING OF THE TOP 30" OF GRANULAR BACKFILL WILL BE REQUIRED AS PER **STANDARD TRENCH RESTORATION T05-04A** (6) AND **T05-05** (2).

DENSITY TESTING SHALL BE PERFORMED BY A LAB PRE-APPROVED BY THE CITY'S CONSTRUCTION DIVISION WITH THE RESULTS BEING SUPPLIED TO THE ENGINEER.

(2A) TRENCH ZONE - GRANULAR BACKFILL AS APPROVED BY LOCAL AGENCY OR WSDOT SPECIFICATION SECTION 9-03.14 FOR SELECT BORROW. COMPACT TO 95% OF MAXIMUM DENSITY IN THE TRENCH ZONE USING METHOD C COMPACTION PER SECTION 2-03.3 (14). CDF MAY BE USED IN LIEU OF GRANULAR BACKFILL. NATIVE MATERIAL MAY BE USED IF APPROVED BY THE ENGINEER PRIOR TO PLACEMENT.

TRENCH ZONE WIDTH
PIPE 8 IN. OR MORE = PIPE O.D. +2 FT. OR AS DIRECTED BY THE ENGINEER
PIPE 6 IN. OR LESS = PIPE O.D. +1 FT. OR AS DIRECTED BY THE ENGINEER

(3) PIPE BEDDING AND PIPE ZONE BACKFILL MATERIALS SHALL BE PER UTILITY OWNERS AND/OR CITY SPECIFICATIONS. DEPTH OF COVER MAY BE ADJUSTED PER UTILITY OWNERS, AND/OR CITY SPECIFICATIONS. 90% COMPACTION PER SECTION 7-08.3(I)C OF THE STANDARD SPECIFICATIONS.

(4) THE EXISTING ROAD SURFACE SHALL BE CUT IN A NEAT LINE PRIOR TO PAVEMENT REPLACEMENT BY SAWCUTTING, WHEEL CUTTER, OR PLANING EQUIPMENT. THIS WILL BE REQUIRED AROUND THE PERIMETER OF ALL EXCAVATIONS TO PROVIDE CLEAN, STRAIGHT, VERTICAL SIDES. THE CUT LINE SHALL BE ONE CONTINUOUS, FULL ASPHALT DEPTH, STRAIGHT LINE 1FT FROM THE OUTER EXCAVATION LIMITS OR OF ANY SLOUGHING OF THE STREET CUT.

ALL STREET CUTS SHALL BE 12" MIN. FROM EXISTING CURB TO ALLOW FOR CONSTRUCTION OF T-CUT SECTION. REMNANT ASPHALT SHALL BE REMOVED AND REPLACED PER **NOTE 5** ON **STANDARD TRENCH RESTORATION - NOTES T05-04A.**

(5) 48" MIN. PAVEMENT RESTORATION AROUND MANHOLES, VALVES AND VAULTS MEASURED FROM EDGE PER **T05-01B**; ARTERIAL ROADWAYS, AND ROADWAYS WITH PCI GREATER THAN 70. MAY REQUIRE ADDITIONAL RESTORATION PER **T05-01B** AND **T05-07**. FOR CONCRETE RESTORATION CONTACT PAVEMENT MANAGEMENT AT (360)696-8177.

(6) THE MINIMUM WEARING COURSE WIDTH SHALL BE EXPANDED TO LANE LINES PER STANDARD PLAN **T05-01B PAVEMENT RESTORATION LIMITS, T05-07 STANDARD TRENCH RESTORATION - HMA - TRANSVERSE CUTS** OR AS DIRECTED BY THE ENGINEER.

(7) THE EDGES OF ALL EXISTING ASPHALT SURFACES SHALL BE CLEANED AND A TACK COAT SHALL BE APPLIED PER SECTION 5-04 OF THE STANDARD SPECIFICATIONS.

(8) ALL JOINTS SHALL BE SEALED USING HEATED PAVING ASPHALT AND SANDED SAME DAY AS PAVING.

REV NO.	DATE	BY	APPR
1	2/07	RAW	MHA
2	8/08	RAW	MHA
3	7/14	DJM	MHA
4	4/18	RAW	MHA
5	7/19	RAW	MHA
6	9/21	RAW	MHA

PUBLIC WORKS - STREETS AND TRANSPORTATION

APPROVED BY: M H Abdalla
ENGINEER MANAGER

APPROVED DATE: 9/1/2021

CITY OF Vancouver WASHINGTON

STANDARD TRENCH RESTORATION - HMA - CONTROLLED DENSITY FILL

STANDARD PLAN NUMBER

T05-06A

I:\CITYAPPS\AUTOCAD\STD_DETAILS\DRAWING_FILES\T05-06A

CDF TECHNICAL SPECIFICATIONS

a) THE CONTROLLED DENSITY FILL (CDF) MIX DESIGN SHALL BE FROM AN APPROVED SOURCE.

b) THE CONTRACTOR SHALL SUBMIT THE MIX DESIGN ONE WEEK MINIMUM PRIOR TO INTENDED USE FOR REVIEW AND APPROVAL. ALTERNATIVELY, THE CONTRACTOR MAY PROVIDE THE SUPPLIER AND MIX NUMBER IF THE CDF MIX HAS BEEN APPROVED WITHIN THE PREVIOUS 12 MONTHS.

c) THE CONTRACTOR SHALL PROVIDE BATCH WEIGHTS SHOWING THE AMOUNTS OF ALL INGREDIENTS IN THE MIX, BATCH TIME, AND THE TOTAL AMOUNT OF THE BATCH.

d) CONTROL DENSITY FILL SHALL BE PERFORMANCE BASED AND MEET THE FOLLOWING CRITERIA:

- THE CDF MIXTURE SHALL BE FLOWABLE, NON–SEGREGATING, AND SELF LEVELING.
- CAN BE PAVED ON WITHIN 48 HOURS UNLESS OTHERWISE APPROVED.
- TYPE F FLY ASH: 200 LBS MINIMUM.
- TYPE I OR II CEMENT: 50 LBS MINIMUM.
- SETTLING SHALL BE LESS THAN 1/8" PER FOOT DEPTH.
- SHALL BE MACHINE DIGABLE UNLESS NOTED OTHERWISE.
- FINE AGGREGATE (LESS THAN 3/8") SHALL BE USED UNLESS OTHERWISE APPROVED.
- CONCRETE UNIT WEIGHT SHALL BE 100 PCF MINIMUM.
- COMPRESSIVE 28 DAY STRENGTHS FROM MIN. 50 PSI TO MAX. 150 PSI.

e) CDF SHALL NOT BE PLACED ON FROZEN GROUND. CDF PATCHING, MIXING AND PLACING MAY BE STARTED IF WEATHER CONDITIONS ARE FAVORABLE, WHEN THE TEMPERATURE IS AT 34–DEGREES F AND RISING. AT THE TIME OF PLACEMENT, CDF MUST HAVE A TEMPERATURE OF AT LEAST 40–DEGREES F. MIXING AND PLACING SHALL STOP WHEN THE TEMPERATURE IS 38 DEGREES F OR LESS AND FALLING. EACH FILLING STAGE SHALL BE AS CONTINUOUS AN OPERATION AS POSSIBLE.

f) TRENCH SECTIONS TO BE FILLED WITH CDF SHALL BE CONTAINED AT EITHER END OF THE TRENCH SECTION BY BULKHEADS OR EARTH FILL.

g) DURING CDF CURE TIME, THE CONTRACTOR SHALL INSTALL STEEL STREET PLATES OR OTHER PROTECTIVE DEVICES WHICH WILL ALLOW FOR THE PASSAGE AND SAFETY OF TRAFFIC WITH NO LOAD TRANSFERRED TO THE CDF.

h) CONTRACTOR SHALL ALLOW FOR A MINIMUM 48 HOUR CURE TIME FOR CDF PRIOR TO PLACING ASPHALT.

i) 30–INCH DEPTH OF CDF MAY BE REDUCED WITH ENGINEER'S APPROVAL IF CONFLICTING WITH PIPE ZONE BACKFILL.

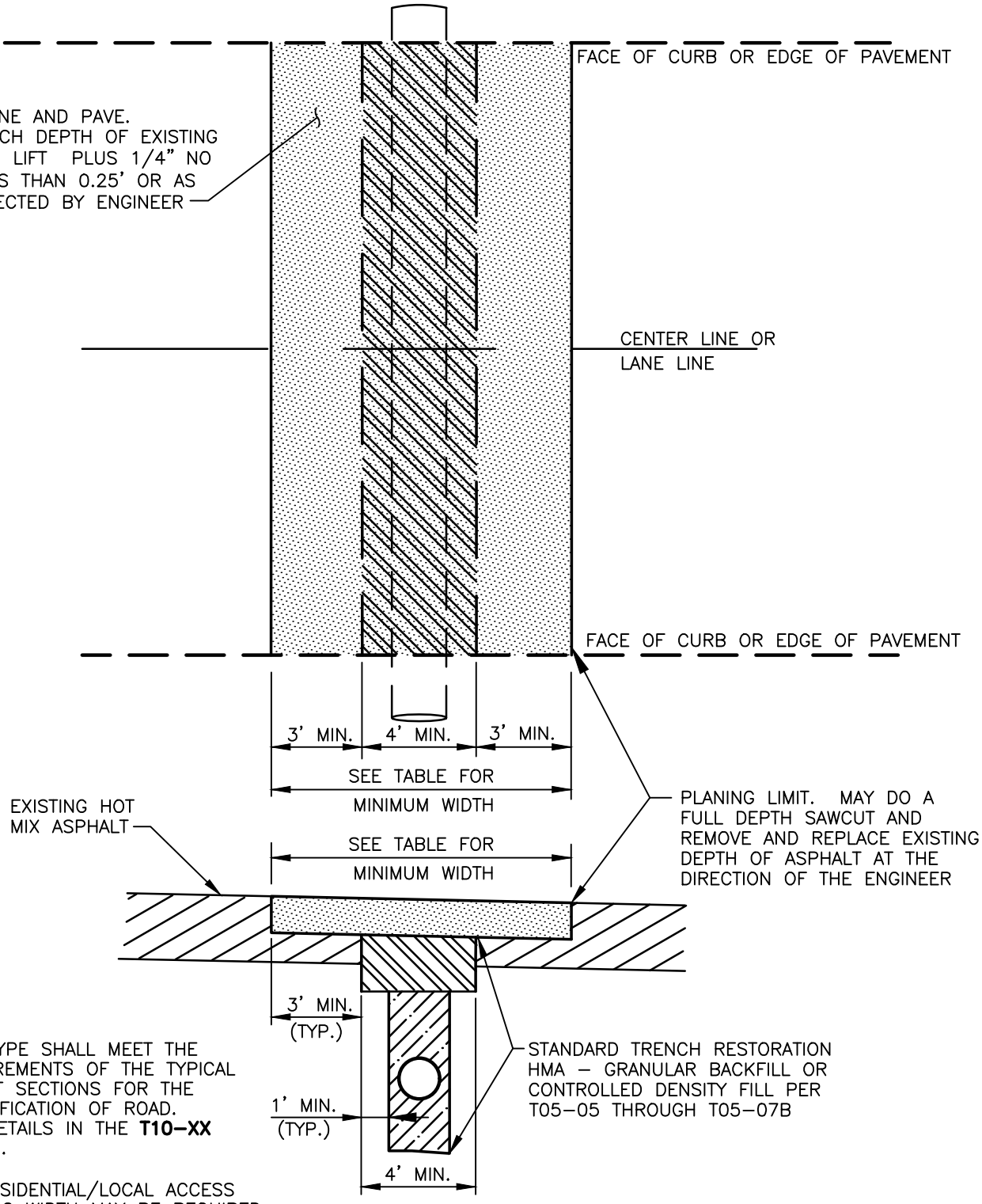

NOTE:

1. HMA TYPE SHALL MEET THE REQUIREMENTS OF THE TYPICAL STREET SECTIONS FOR THE CLASSIFICATION OF ROAD. SEE DETAILS IN THE **T10–XX** SERIES.

2. 10' RESIDENTIAL/LOCAL ACCESS PLANING WIDTH MAY BE REQUIRED ON STREETS WITH A PCI LESS THAN 50 OR GREATER THAN 70 OR AS REQUIRED BY THE ENGINEER.

3. PLANING SHALL EXTEND A MINIMUM OF 3' BEYOND THE SAWCUT OF THE T–CUT.

4. AT DRIVEWAY/CURB OPENINGS OR REPLACEMENTS LONGITUDINAL LIMITS OF PLANE AND PAVE SHALL BE EXTENDED 3' BEYOND THE NEW CONSTRUCTION AND 5' BEYOND THE TANGENT LENGTH OF A CONSTRUCTED CURB RADIUS.

MINIMUM PLANING WIDTHS

ROADWAY TYPE	WIDTH
PRINCIPAL ARTERIAL	25'
MINOR ARTERIAL	20'
COLLECTOR ARTERIAL	15'
RESIDENTIAL/LOCAL ACCESS ②	10'

REV NO.	DATE	BY	APPR
1	2/07	RAW	MHA
2	8/08	RAW	MHA
3	7/14	DJM	MHA
4	3/17	RAW	MHA
5	4/18	RAW	MHA
6	9/21	RAW	MHA

PUBLIC WORKS – STREETS AND TRANSPORTATION

APPROVED BY: M H Abdalla
ENGINEER MANAGER

APPROVED DATE: 9/1/2021

CITY OF Vancouver WASHINGTON

STANDARD TRENCH RESTORATION – HMA – TRANSVERSE CUTS

STANDARD PLAN NUMBER

T05–07

I:\CITYAPPS\AUTOCAD\STD_DETAILS\DRAWING_FILES\T05–07

① EXISTING PORTLAND CEMENT CONCRETE PAVEMENT SHALL BE SAWCUT AROUND THE ENTIRE PERIMETER OF THE PAVEMENT TO BE REMOVED PRIOR TO REMOVAL. THE DIMENSIONS OF THE PAVEMENT TO BE REMOVED SHALL MEET THE REQUIREMENTS OF STANDARD PLAN SHEETS **T05–10** AND **T05–11**. PAVEMENT REMOVAL SHALL EXTEND A MINIMUM OF 12" BEYOND THE FINAL TRENCH WIDTH. MATCH EXISTING CONCRETE DEPTH.

TRENCH ZONE WIDTH
PIPE 8 IN. OR MORE = PIPE O.D. +2 FT. OR AS DIRECTED BY THE ENGINEER
PIPE 6 IN. OR LESS = PIPE O.D. +1 FT. OR AS DIRECTED BY THE ENGINEER

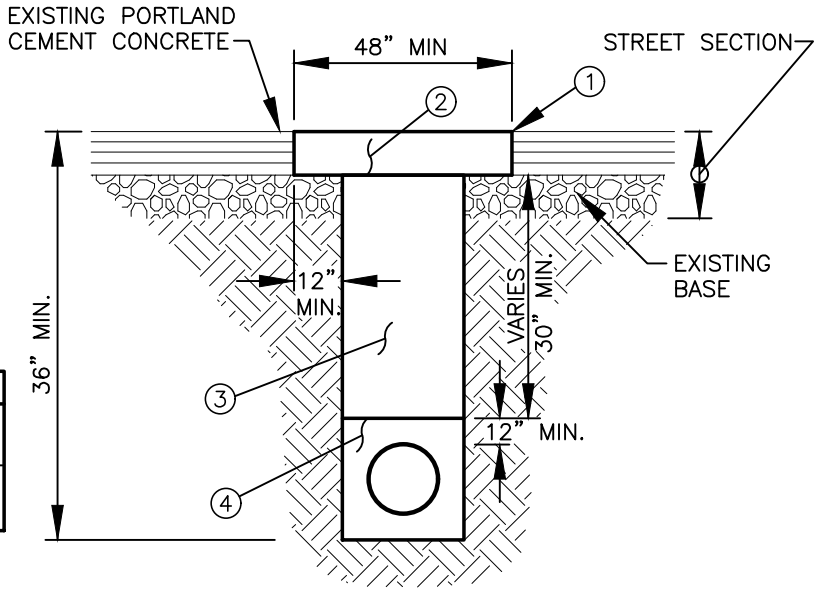

② CEMENT CONCRETE PAVEMENT CONSTRUCTION SHALL FOLLOW THE REQUIREMENTS OF SECTION 5–05 OF THE CURRENT VERSION OF THE WSDOT STANDARD SPECIFICATIONS FOR ROAD, BRIDGE AND MUNICIPAL CONSTRUCTION WITH THE FOLLOWING MODIFICATIONS:

a) THE CONTRACTOR MAY SUBMIT A PREVIOUS MIX DESIGN WHICH HAS BEEN ACCEPTED BY THE CITY FOR OTHER CEMENT CONCRETE PAVEMENT CONSTRUCTION.

b) LONGITUDINAL AND TRANSVERSE CONTRACTION JOINTS SHALL BE CONSTRUCTED IN THE SAME LOCATION AS EXISTING CONTRACTION JOINTS AND SHALL MATCH THE JOINT LOCATION OF ADJACENT CONCRETE PAVEMENT NOT REMOVED. ISOLATION JOINTS SHALL BE CONSTRUCTED AROUND ANY CATCH BASINS AND MANHOLES IN THE PAVEMENT AS SHOWN ON **CONSTRUCTION JOINTS DETAIL T05–02**.

c) SAWED CONTRACTION JOINTS SHALL BE CONSTRUCTED AND SEALED AS SHOWN ON **CONCRETE PATCH JOINTS DETAIL T05–03**.

d) TIE BARS AND DOWEL BARS:
EXISTING PCC 8–INCHES OR GREATER: THE SIZE AND LOCATION OF TIE AND DOWEL BARS SHALL BE CONSTRUCTED AS SHOWN ON **STEEL LAYOUT FOR CONCRETE PATCH – INTERIOR DETAIL T05–11** AND **STEEL LAYOUT FOR CONCRETE PATCH – EXTERIOR DETAIL T05–12**. TIE BARS AND DOWEL BARS SHALL BE PLACED BETWEEN THE RESTORED PAVEMENT AND THE EXISTING PAVEMENT.

EXISTING PCC LESS THAN 8–INCHES: TIE BARS AND DOWEL BARS SHALL NOT BE USED. THE PCC SHALL BE THICKENED TO 9–INCHES. PLAIN CONTRACTION JOINTS SHALL BE CONSTRUCTED. CONSTRUCTION JOINTS IN NEW PCC MAY REQUIRE DOWELS AND TIE BARS IF LOADING CONDITIONS WARRANT AND WILL BE IDENTIFIED IN PERMITTING OR DEVELOPMENT REQUIREMENTS.

e) THE FINISH OF THE PCC PAVEMENT SHALL MATCH (AS CLOSE AS POSSIBLE) THE FINISH OF THE EXISTING PAVEMENT AT THE TIME IT WAS CONSTRUCTED.

f) SURFACE SMOOTHNESS SHALL FOLLOW THE REQUIREMENTS FOR SMALL OR IRREGULAR AREAS IDENTIFIED IN THE STANDARD SPECIFICATIONS.

g) THE PAVEMENT MAY BE OPENED TO TRAFFIC WHEN THE CONCRETE HAS DEVELOPED A COMPRESSIVE STRENGTH OF 4,000 PSI. THIS STRENGTH SHALL BE ACHIEVED WITHIN 3 DAYS FOLLOWING CONCRETE PLACEMENT UNLESS APPROVED BY THE ENGINEER.

③ BACKFILL SHALL CONSIST OF CONTROL DENSITY FILL (CDF), A MIXTURE OF PORTLAND CEMENT, FLY ASH, AGGREGATES, WATER AND ADMIXTURES PROPORTIONED TO PROVIDE A NON–SEGREGATING, SELF–CONSOLIDATING, FREE–FLOWING MATERIAL WHICH WILL RESULT IN A HARDENED, DENSE, NON–SETTLING FILL PRODUCING UNCONFINED COMPRESSIVE 28 DAY STRENGTHS FROM 50 PSI TO A MAXIMUM OF 150 PSI. SEE **T05–06B** FOR **CDF TECHNICAL SPECIFICATIONS.**

④ PIPE BEDDING AND PIPE ZONE BACKFILL SHALL BE PER UTILITY OWNERS AND/OR CITY SPECIFICATIONS. DEPTH OF COVER MAY BE ADJUSTED PER UTILITY OWNERS AND/OR CITY SPECIFICATIONS, 90% COMPACTION PER SECTION 7–08.3(1)C OF THE STANDARD SPECIFICATIONS.

REV NO.	DATE	BY	APPR
1	8/04	RAW	MHA
2	3/06	RAW	MHA
3	2/07	DJM	MHA
4	8/08	RAW	MHA
5	7/14	DJM	MHA
6	9/21	RAW	MHA

PUBLIC WORKS – STREETS AND TRANSPORTATION

APPROVED BY: M H Abdalla
ENGINEER MANAGER
APPROVED DATE: 9/1/2021

CITY OF Vancouver WASHINGTON

STANDARD TRENCH RESTORATION – CEMENT CONCRETE PAVEMENT

STANDARD PLAN NUMBER
T05–08

I:\CITYAPPS\AUTOCAD\STD_DETAILS\DRAWING_FILES\T05–08

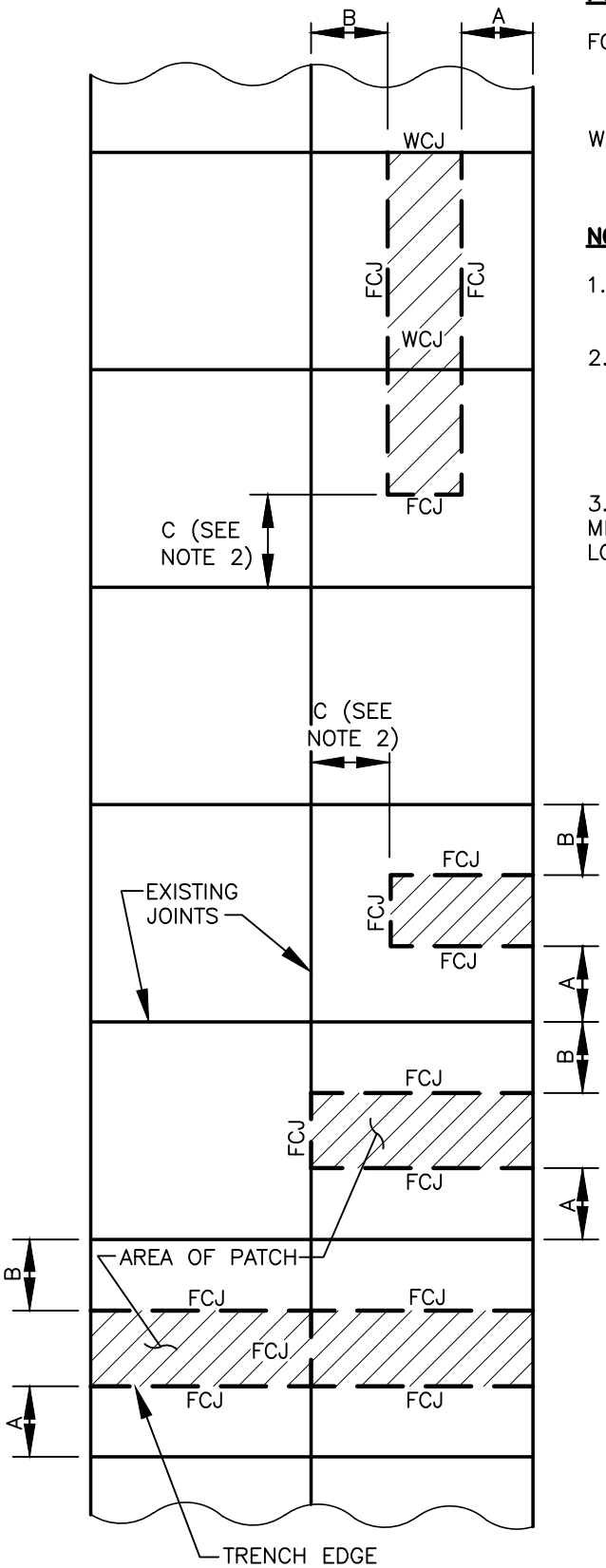

PCC SAWCUT LOCATED IN INTERIOR OF SLAB PANELS

FCJ = FIXED CONSTRUCTION JOINT WITH DEFORMED TIE BARS SEE **STEEL LAYOUT FOR CONCRETE PATCH – INTERIOR DETAIL T5–11**.

WCJ = WORKING CONTRACTION JOINT WITH SMOOTH DOWELS SEE **STEEL LAYOUT FOR CONCRETE PATCH – INTERIOR DETAIL T5–11**.

NOTES:

1. THESE PATCH LAYOUTS APPLY WHEN BOTH A AND B ARE GREATER THAN OR EQUAL TO 5FT.

2. IF C IS LESS THAN 5FT., THEN EXTEND PATCH TO EXISTING JOINT, EXCEPT IF EXISTING JOINT HAS SMOOTH DOWELS, THEN EXTEND PATCH 5FT. BEYOND JOINT, REMOVE EXISTING DOWEL ASSEMBLY AND REPLACE WITH NEW ASSEMBLY.

3. IF NEW JOINT FALLS WITHIN A WHEEL PATH OR MIDDLE OF BIKE LANE, EXTEND RESTORATION TO NEAREST LONGITUDINAL OR TRANSVERSE JOINT.

REV NO.	DATE	BY	APPR
1	8/04	RAW	MHA
2	3/06	RAW	MHA
3	2/07	RAW	MHA
4	8/08	RAW	MHA
5	7/14	DJM	MHA
6	9/21	RAW	MHA

PUBLIC WORKS – STREETS AND TRANSPORTATION

APPROVED BY: M H Abdalla
ENGINEER MANAGER

APPROVED DATE: 9/1/2021

CITY OF Vancouver WASHINGTON

CONCRETE PATCH LAYOUT – INTERIOR

STANDARD PLAN NUMBER

T05–09

I:\CITYAPPS\AUTOCAD\STD_DETAILS\DRAWING_FILES\T05–09

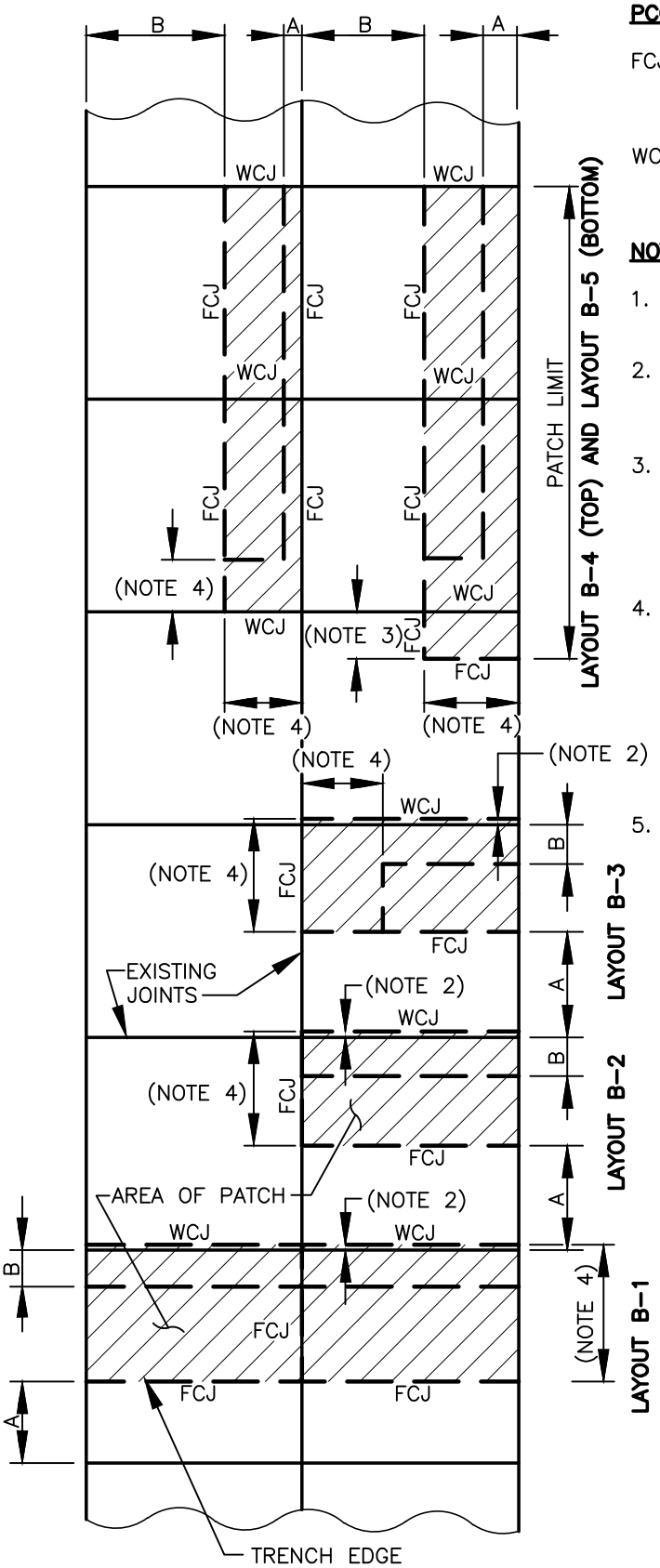

PCC SAWCUT LOCATED NEAR EXTERIOR OF SLAB PANELS

FCJ = FIXED CONSTRUCTION JOINT WITH DEFORMED TIE BARS SEE **STEEL LAYOUT FOR CONCRETE PATCH – EXTERIOR DETAIL T5–12**.

WCJ = WORKING CONTRACTION JOINT WITH SMOOTH DOWELS SEE **STEEL LAYOUT FOR CONCRETE PATCH – EXTERIOR DETAIL T5–12**.

NOTES:

1. THESE PATCH LAYOUTS APPLY WHEN EITHER A OR B ARE LESS THAN 5FT.
2. IF EXISTING TRANSVERSE JOINT HAS SMOOTH DOWELS, THEN EXTEND PATCH 5FT. BEYOND JOINT AND REMOVE EXISTING DOWEL ASSEMBLY.
3. FOR LONGITUDINAL PATCH THAT COVERS LESS THEN FULL WIDTH OF SLAB, EXTEND PATCH 5FT. BEYOND EXISTING JOINT IF IT HAS SMOOTH DOWELS, REMOVE EXISTING DOWEL ASSEMBLY DOWEL AND REPLACE WITH NEW ASSEMBLY.
4. WHERE EDGE OF TRENCH IS < 5FT. FROM JOINT, EXTEND PATCH TO NEAREST JOINT OR BEYOND AS REQUIRED BY NOTE 2 AND 3. FOR TRANSVERSE PATCH WITH TRANSVERSE EDGE < 5FT. FROM TRANSVERSE JOINT (**LAYOUT B–3**), EXTEND PATCH TO BOTH NEAREST TRANSVERSE AND NEAREST LONGITUDINAL JOINT SO THAT WCJ EXTENDS ACROSS THE FULL SLAB WIDTH.
5. IF NEW JOINT FALLS WITHIN A WHEEL PATH OR MIDDLE OF BIKE LANE, EXTEND RESTORATION TO NEAREST LONGITUDINAL OR TRANSVERSE JOINT.

REV NO.	DATE	BY	APPR
1	8/04	RAW	MHA
2	3/06	RAW	MHA
3	2/07	RAW	MHA
4	8/08	RAW	MHA
5	7/14	DJM	MHA
6	9/21	RAW	MHA

PUBLIC WORKS – STREETS AND TRANSPORTATION

APPROVED BY: M H Abdalla
ENGINEER MANAGER

APPROVED DATE: 9/1/2021

CITY OF Vancouver WASHINGTON

CONCRETE PATCH LAYOUT – EXTERIOR

STANDARD PLAN NUMBER

T05–10

I:\CITYAPPS\AUTOCAD\STD_DETAILS\DRAWING_FILES\T05-10

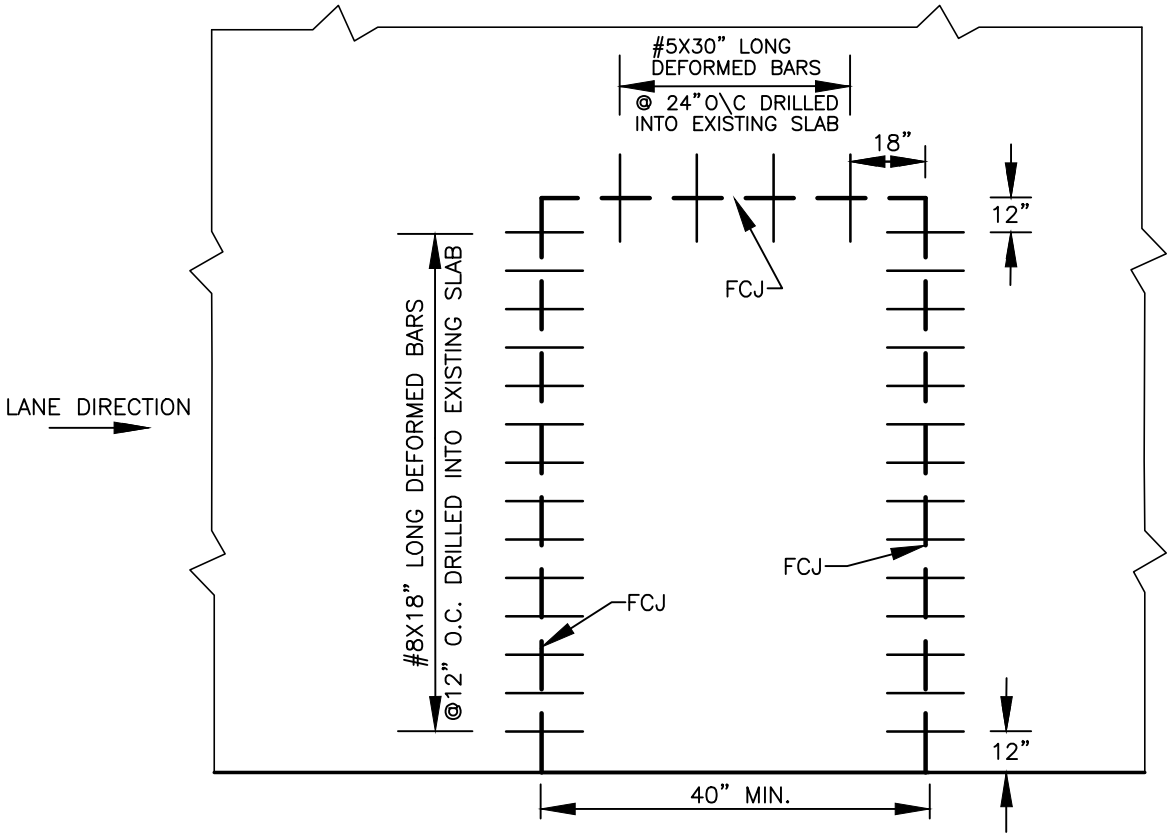

STEEL LAYOUT – TRANSVERSE INTERIOR PATCH

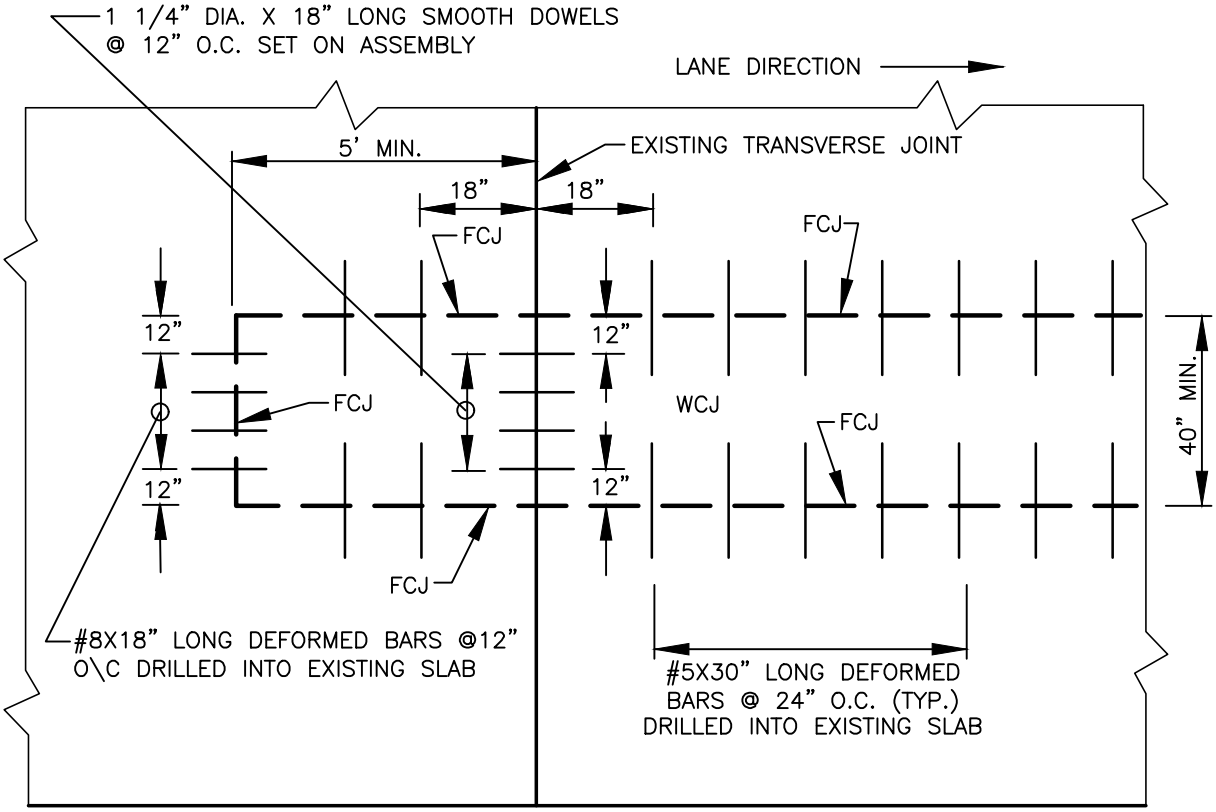

STEEL LAYOUT – LONGITUDINAL INTERIOR PATCH

REV NO.	DATE	BY	APPR
1	8/04	RAW	MHA
2	3/06	RAW	MHA
3	2/07	RAW	MHA
4	8/08	RAW	MHA
5	7/14	DJM	MHA
6	9/21	RAW	MHA

PUBLIC WORKS – STREETS AND TRANSPORTATION

APPROVED BY: M H Abdalla
ENGINEER MANAGER

APPROVED DATE: 9/1/2021

CITY OF Vancouver WASHINGTON

STEEL LAYOUT FOR CONCRETE PATCH – INTERIOR

STANDARD PLAN NUMBER

T05–11

I:\CITYAPPS\AUTOCAD\STD_DETAILS\DRAWING_FILES\T05-11

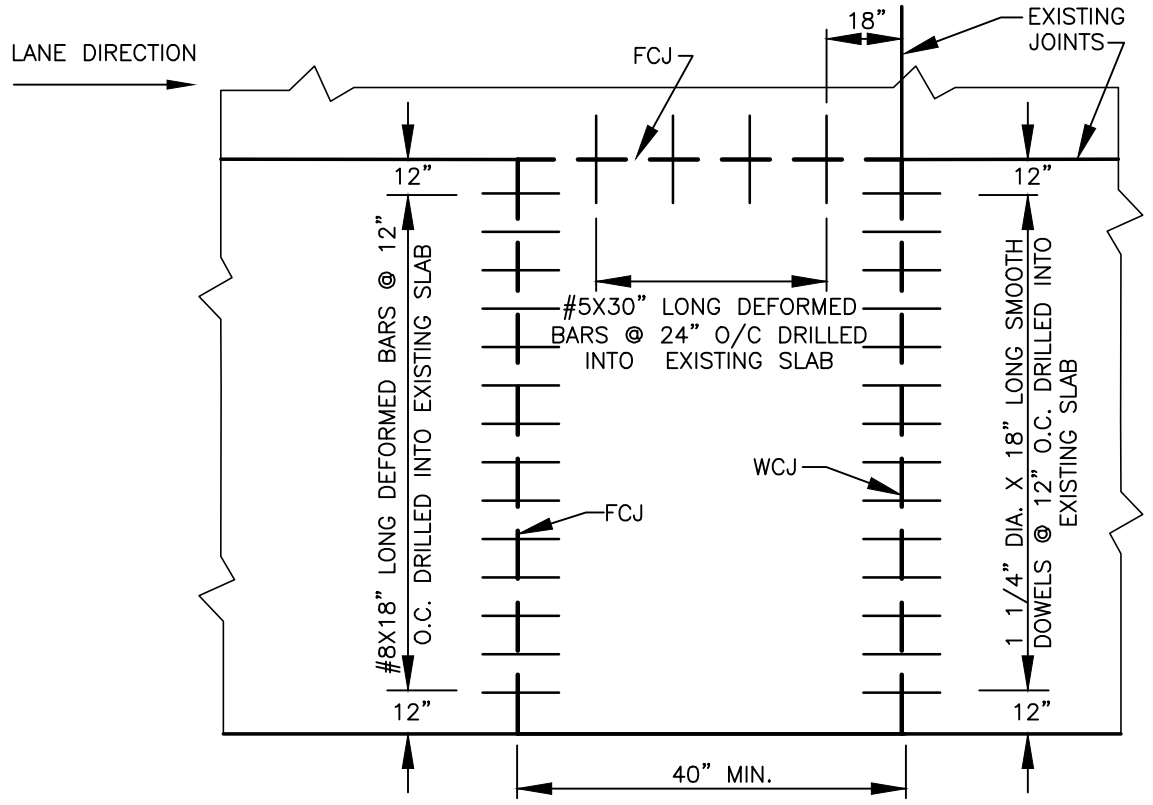

STEEL LAYOUT – TRANSVERSE EXTERIOR PATCH

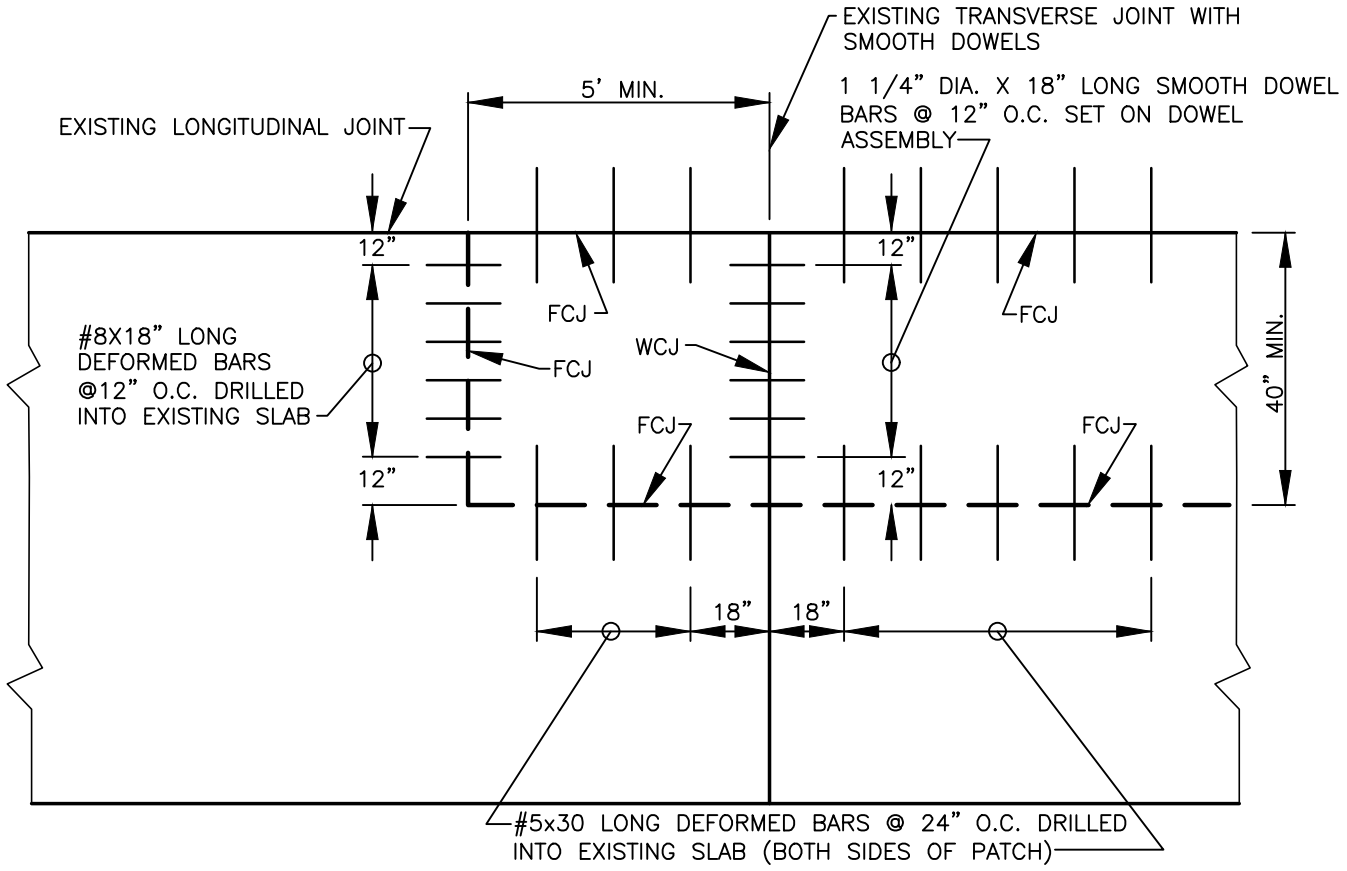

STEEL LAYOUT – LONGITUDINAL EXTERIOR PATCH

REV NO.	DATE	BY	APPR
1	8/04	RAW	MHA
2	3/06	RAW	MHA
3	2/07	RAW	MHA
4	8/08	RAW	MHA
5	7/14	DJM	MHA
6	9/21	RAW	MHA

PUBLIC WORKS – STREETS AND TRANSPORTATION

APPROVED BY: M H Abdalla
ENGINEER MANAGER

APPROVED DATE: 9/1/2021

CITY OF Vancouver WASHINGTON

STEEL LAYOUT FOR CONCRETE PATCH – EXTERIOR

STANDARD PLAN NUMBER

T05–12

I:\CITYAPPS\AUTOCAD\STD_DETAILS\DRAWING_FILES\T05-12

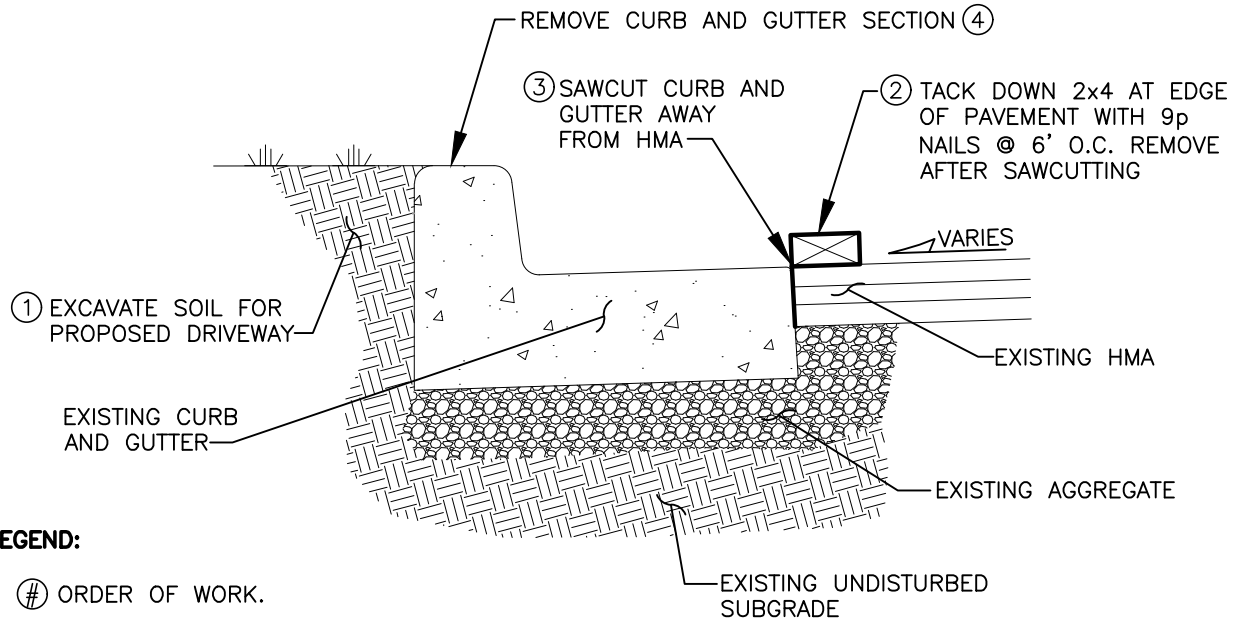

LEGEND:

(#) ORDER OF WORK.

EXISTING CONDITION

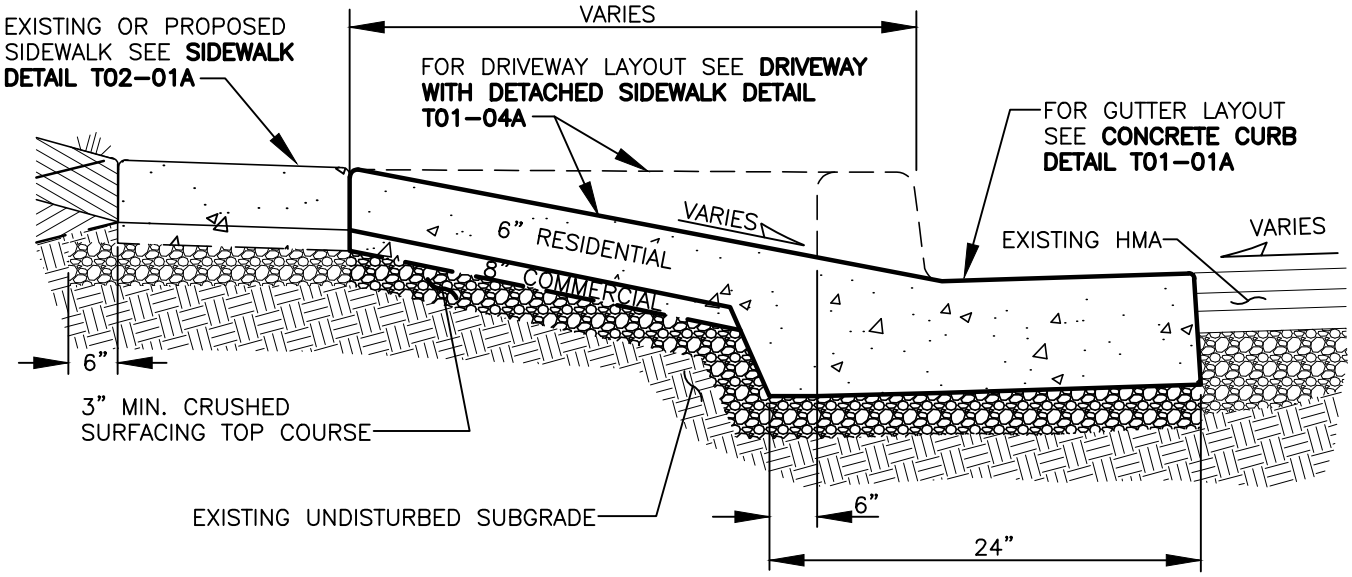

5 PROPOSED LAYOUT

NOTES:

1. IF HMA IS DAMAGED OR UNDERMINED WHILE REMOVING EXISTING CURB, SAWCUTTING AND PAVEMENT RESTORATION IS REQUIRED, SEE **RESTORATION/WIDENING AT CURBS DETAIL T05–01A** AND **PAVEMENT RESTORATION LIMITS DETAIL T05–01B**.
2. CONCRETE SHALL BE 4000 PSI MIN. (CL 4000), 3–1/2" SLUMP (MAX.), MEDIUM BROOM FINISH PARALLEL TO DRIVEWAY CENTERLINE.
3. COMMERCIAL DRIVEWAYS REQUIRE 8" CONCRETE WITH REINFORCING STEEL (6x6 – W2.9xW2.9 WWF, MIN.), 1 1/2" COVER FROM BOTTOM OF SLAB. RESIDENTIAL DRIVEWAYS REQUIRE 6" CONCRETE.
4. COMPACT SUBGRADE AND CRUSHED SURFACING TOP COURSE TO 95% OF MAXIMUM DRY DENSITY (3" MIN. DEPTH).

REV NO.	DATE	BY	APPR
1	8/08	RAW	MHA
2	7/14	DJM	MHA
3	3/17	RAW	MHA
4	4/18	RAW	MHA
5	9/21	RAW	MHA

PUBLIC WORKS – STREETS AND TRANSPORTATION

APPROVED BY: M H Ledalla
ENGINEER MANAGER
APPROVED DATE: 9/1/2021

CITY OF Vancouver WASHINGTON

CURB AND GUTTER RESTORATION AT DRIVEWAYS WITH DETACHED SIDEWALK

STANDARD PLAN NUMBER
T05–13

I:\CITYAPPS\AUTOCAD\STD_DETAILS\DRAWING_FILES\T05–13

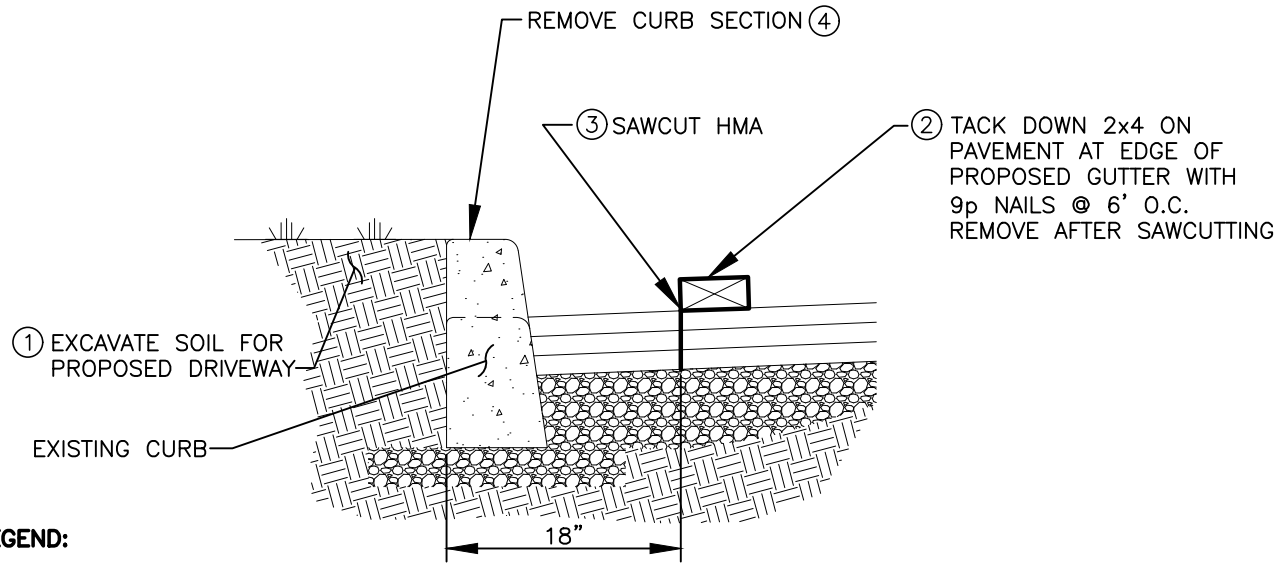

LEGEND:

(#) ORDER OF WORK.

EXISTING TYPE E–1 CURB

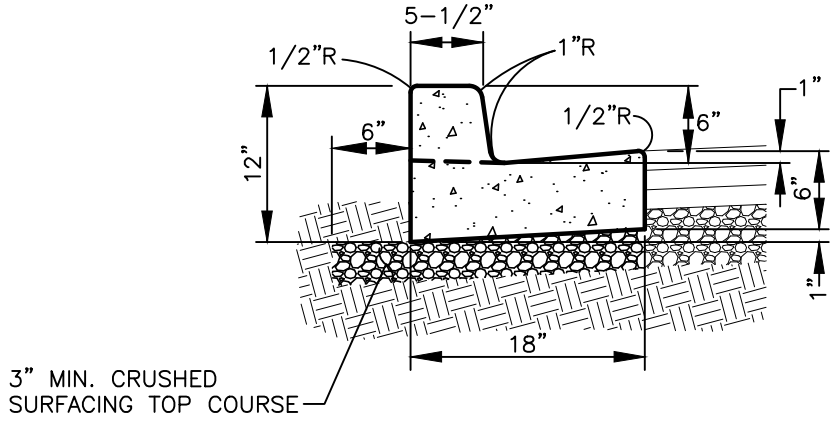

⑤ PROPOSED TYPE A–1 CURB AND GUTTER

(FOR ADDITIONAL INFORMATION SEE **CONCRETE CURB DETAIL T01–01A**)

NOTES:

1. IF HMA IS DAMAGED OR UNDERMINED WHILE REMOVING EXISTING CURB, SAWCUTTING AND PAVEMENT RESTORATION IS REQUIRED, SEE **RESTORATION/WIDENING AT CURBS DETAIL T05–01A** AND **PAVEMENT RESTORATION LIMITS DETAIL T05–01B**.
2. COMPACT SUBGRADE AND CRUSHED SURFACING TOP COURSE TO 95% OF MAXIMUM DRY DENSITY (3" MIN. DEPTH).

REV NO.	DATE	BY	APPR
1	8/08	RAW	MHA
2	7/14	DJM	MHA
3	3/17	RAW	MHA
4	4/18	RAW	MHA
5	9/21	RAW	MHA

PUBLIC WORKS – STREETS AND TRANSPORTATION

APPROVED BY: M H Abdalla
ENGINEER MANAGER

APPROVED DATE: 9/1/2021

CITY OF Vancouver WASHINGTON

OPTIONAL E–1 CURB REPLACEMENT WITH A–1 CURB AND GUTTER

STANDARD PLAN NUMBER

T05–14

I:\CITYAPPS\AUTOCAD\STD_DETAILS\DRAWING_FILES\T05–14

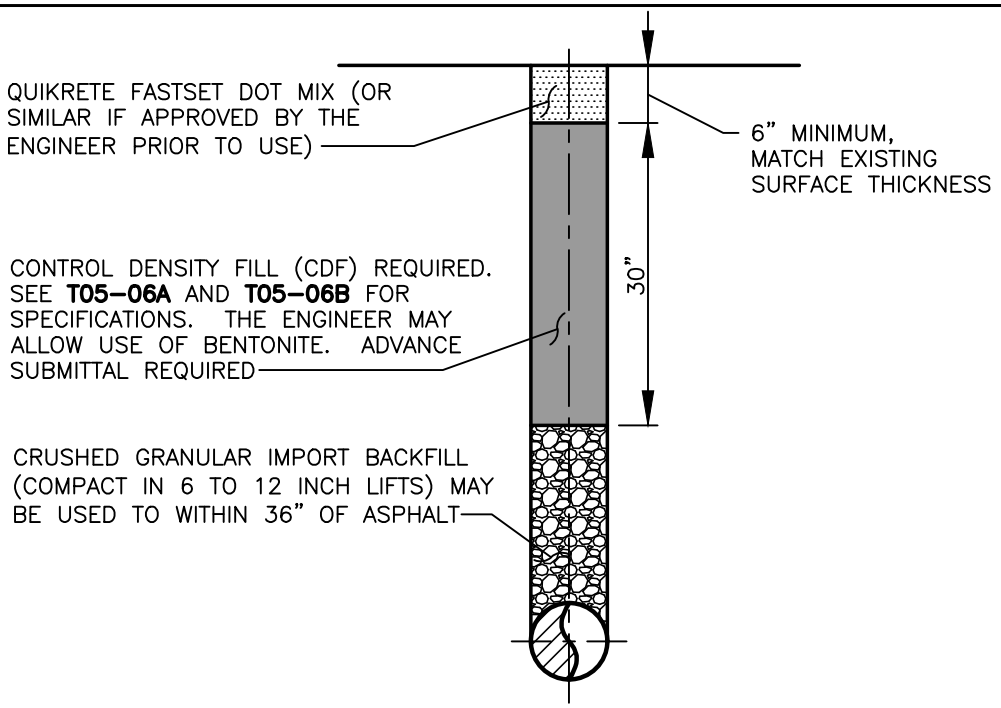

CORED HOLE ALL

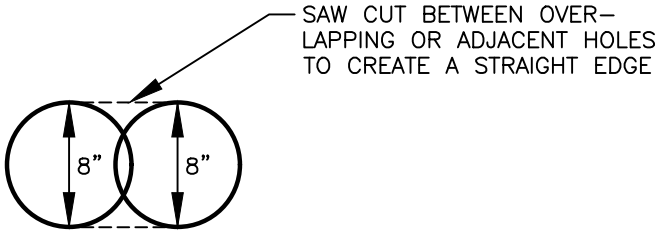

CORED HOLE PLAN VIEW AT OVERLAPPING OR ADJACENT HOLES

NOTES:

NON-PAVED SURFACE

1. FOR HOLES THROUGH SOIL OR GRAVEL ONLY, REPLACE WITH NATIVE/LIKE MATERIAL TO GRADE AND USE SAND LAYER TO PROTECT UTILITY (NOTE 2).
2. FOR HOLES THROUGH A SIDEWALK, REMOVE AFFECTED PANEL(S) AND REPLACE PER CITY OF VANCOUVER STANDARDS. JOINT TO JOINT REPLACEMENT REQUIRED OR AS DIRECTED BY ENGINEER.

PAVED ROADWAY

3. ALL STREETS WITH A PAVEMENT CONDITION INDEX (PCI) OF 70 OR GREATER REQUIRE AN 8" OR SMALLER CORED HOLE FOR POTHOLES OR TEST HOLES, OR AS DIRECTED BY THE ENGINEER.
4. HOLES SHALL BE PLACED OUTSIDE OF WHEEL PATH OF TRAVELWAY WHERE POSSIBLE.
5. 6" TO 12" LAYER OF SAND DIRECTLY ABOVE THE UTILITY MAY BE USED WHEN BACKFILLING TO PROTECT EXISTING UTILITY STRUCTURE (OPTIONAL/AS NEEDED).
6. NO USE OF COLD MIX OR REUSING EXISTING CORE FOR FINAL CAP.
7. OPENINGS LARGER THAN 8" WILL BE CONSIDERED OPEN CUT AND SHALL MEET REQUIREMENTS OF **PAVEMENT RESTORATION LIMITS T05-01B, STANDARD TRENCH RESTORATION – HMA – CONTROLLED DENSITY FILL T05-06A** AND **T05-06B** AND **STANDARD TRENCH RESTORATION – HMA TRANSVERSE CUTS T05-07**.
8. WHEN OPEN AND UNATTENDED COVER WITH PLATE 2 TIMES DIAMETER AND STABILIZE TO KEEP IN PLACES.
9. INSTALLATION OF MONITORING WELLS OR OTHER PERMANENT OR SEMI-PERMANENT FIXTURES REQUIRE A STREET USE PERMIT (TYPE D) PER VMC 11.60.040.

REV NO.	DATE	BY	APPR
1	7/14	DJM	MHA
2	3/17	RAW	MHA
3	4/18	RAW	MHA
4	9/21	RAW	MHA

PUBLIC WORKS – STREETS AND TRANSPORTATION

APPROVED BY: M H Abdalla
ENGINEER MANAGER
APPROVED DATE: 9/1/2021

CITY OF Vancouver WASHINGTON

CORED HOLE
(POTHOLE/TEST HOLE/MONITORING WELL)
SECTION AND PLAN VIEW

STANDARD PLAN NUMBER
T05-15

I:\CITYAPPS\AUTOCAD\STD_DETAILS\DRAWING_FILES\T05-15

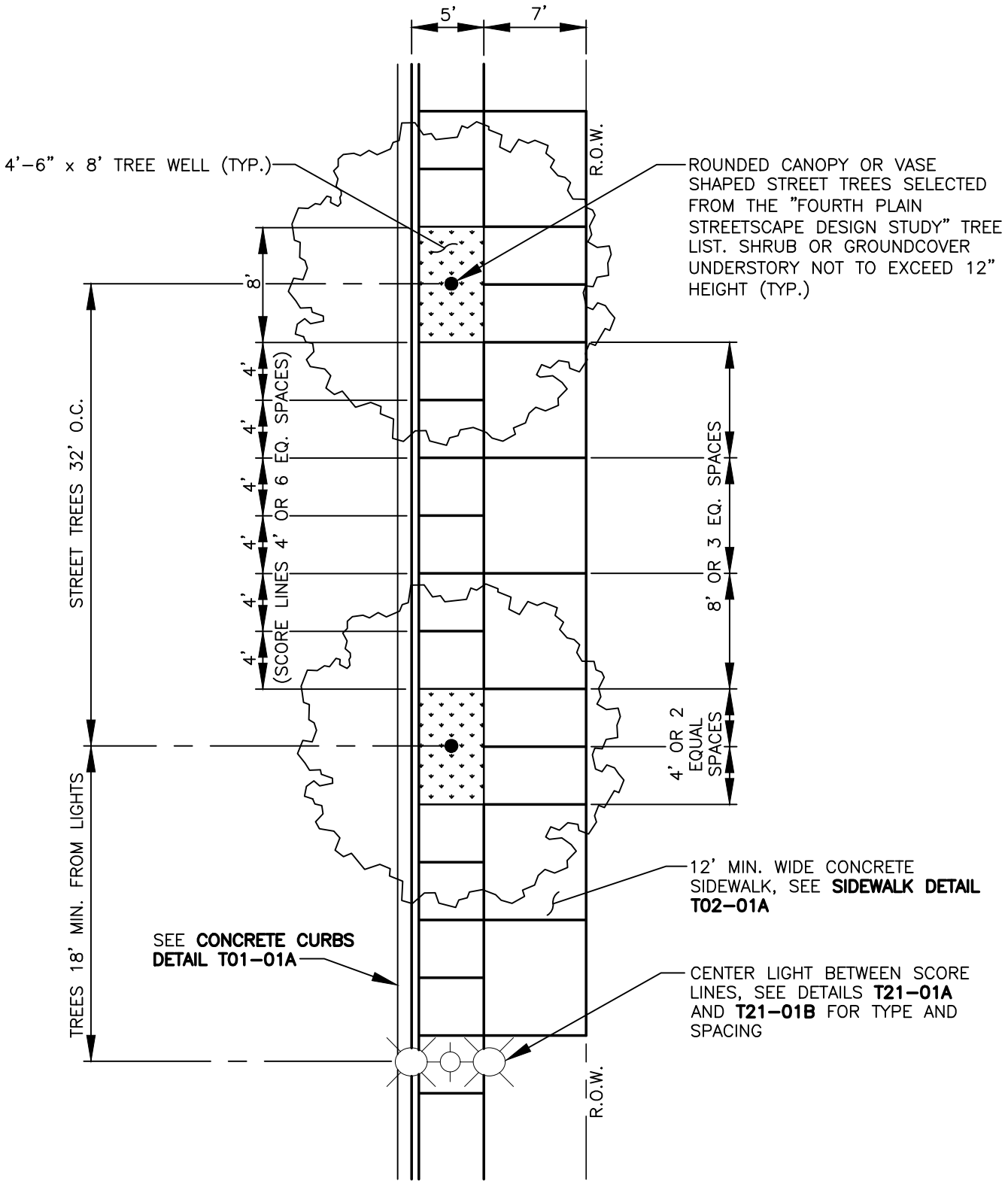

NOTES:

1. FINISH SHALL BE LIGHT BROOM PERPENDICULAR TO PEDESTRIAN TRAFFIC UNLESS OTHERWISE NOTED.
2. SIDEWALK PATTERN APPLIES TO FOURTH PLAIN BOULEVARD "VILLAGE" DESIGN AREA.
3. SCORE LINES SHALL BE CRISP AND WITHOUT SHINERS.

REV NO.	DATE	BY	APPR
1	8/08	RAW	MHA
2	7/14	RAW	MHA
3	3/17	RAW	MHA
4	9/21	RAW	MHA

PUBLIC WORKS – STREETS AND TRANSPORTATION

APPROVED BY: M H Abdalla
ENGINEER MANAGER

APPROVED DATE: 9/1/2021

CITY OF Vancouver WASHINGTON

FOURTH PLAIN BOULEVARD "VILLAGE" SIDEWALK

STANDARD PLAN NUMBER

T06–01

I:\CITYAPPS\AUTOCAD\STD_DETAILS\DRAWING_FILES\T06–01

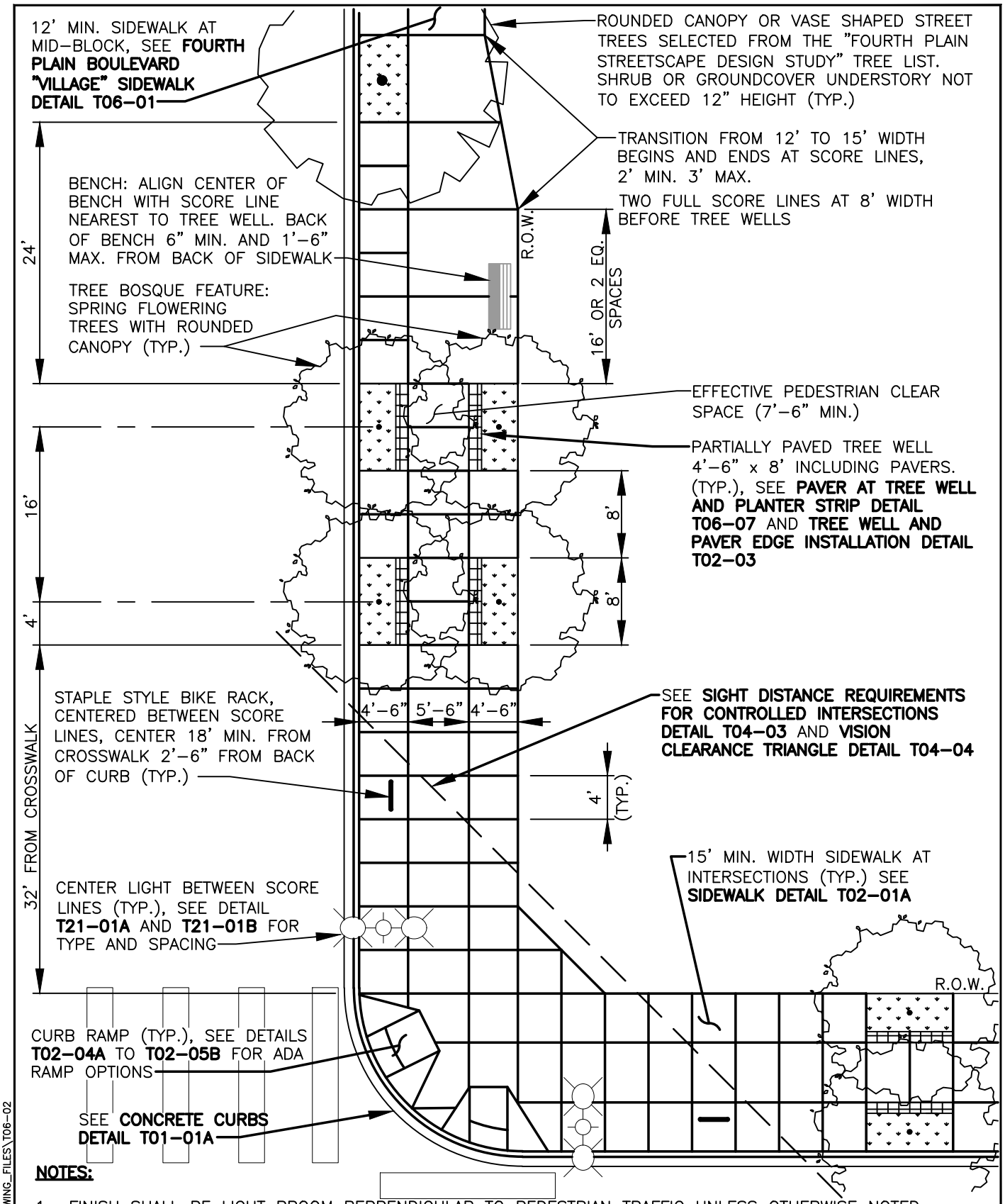

NOTES:

1. FINISH SHALL BE LIGHT BROOM PERPENDICULAR TO PEDESTRIAN TRAFFIC UNLESS OTHERWISE NOTED. TRUNCATED DOME COLOR BLACK OR GREY.
2. SIDEWALK PATTERN APPLIES TO FOURTH PLAIN BOULEVARD "VILLAGE" DESIGN AREA.
3. SCORE LINES SHALL BE CRISP AND WITHOUT SHINERS.

REV NO.	DATE	BY	APPR
1	8/08	RAW	MHA
2	7/14	RAW	MHA
3	3/17	RAW	MHA
4	9/21	RAW	MHA

PUBLIC WORKS – STREETS AND TRANSPORTATION

APPROVED BY: M H Abdalla
ENGINEER MANAGER
APPROVED DATE: 9/1/2021

CITY OF Vancouver WASHINGTON

FOURTH PLAIN BOULEVARD "VILLAGE" CORNER WITHOUT BUS STOP

STANDARD PLAN NUMBER T06-02

I:\CITYAPPS\AUTOCAD\STD_DETAILS\DRAWING_FILES\T06-02

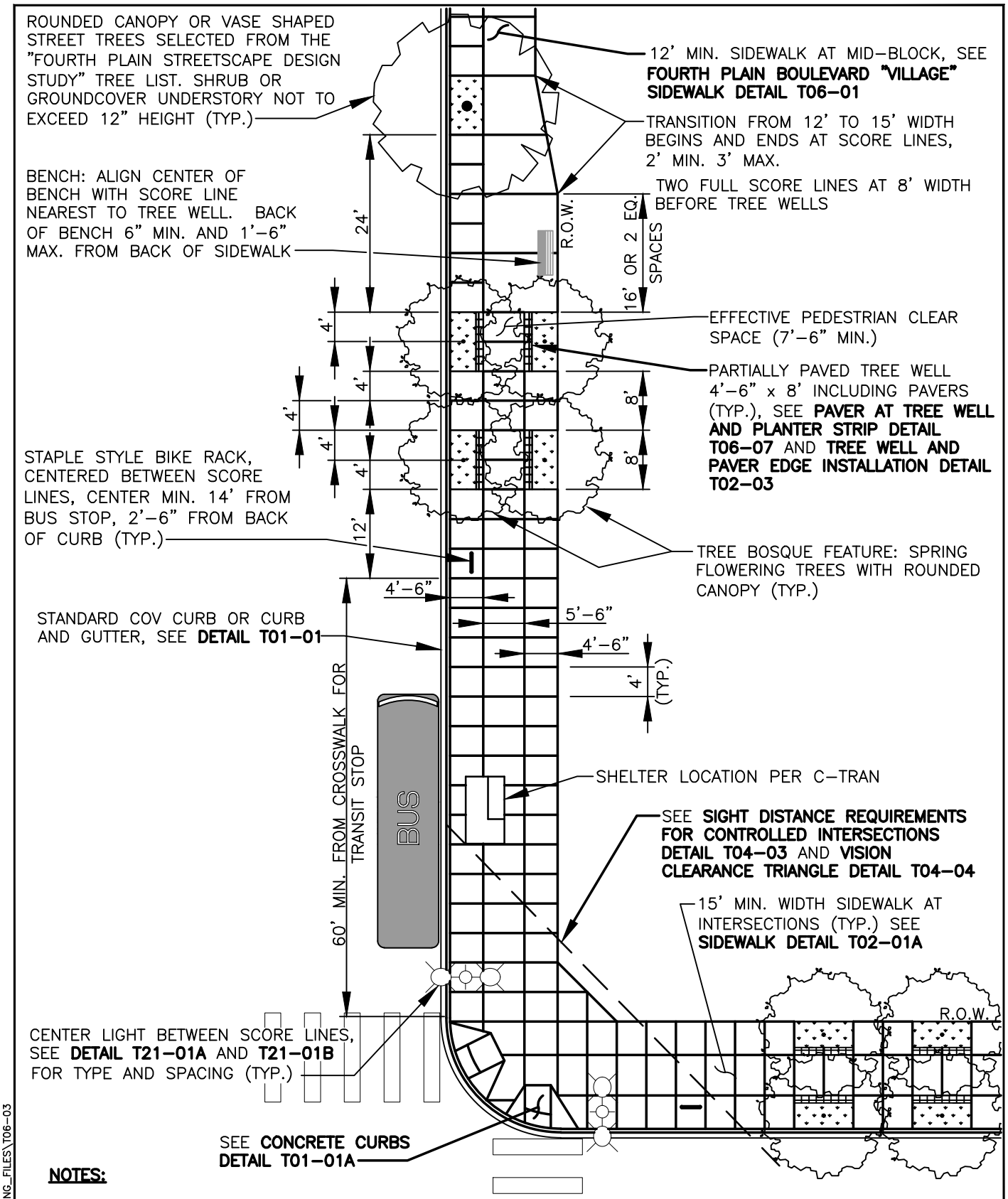

NOTES:

1. FINISH SHALL BE LIGHT BROOM PERPENDICULAR TO PEDESTRIAN TRAFFIC UNLESS OTHERWISE NOTED. TRUNCATED DOME COLOR BLACK OR GREY.
2. SIDEWALK PATTERN APPLIES TO FOURTH PLAIN BOULEVARD "VILLAGE" DESIGN AREA.
3. SCORE LINES SHALL BE CRISP AND WITHOUT SHINERS.

REV NO.	DATE	BY	APPR
1	8/08	RAW	MHA
2	7/14	RAW	MHA
3	3/17	RAW	MHA
4	9/21	RAW	MHA

PUBLIC WORKS – STREETS AND TRANSPORTATION

APPROVED BY: M H Abdalla
ENGINEER MANAGER
APPROVED DATE: 9/1/2021

CITY OF Vancouver WASHINGTON

FOURTH PLAIN BOULEVARD "VILLAGE" CORNER WITH BUS STOP

STANDARD PLAN NUMBER
T06-03

I:\CITYAPPS\AUTOCAD\STD_DETAILS\DRAWING_FILES\T06-03

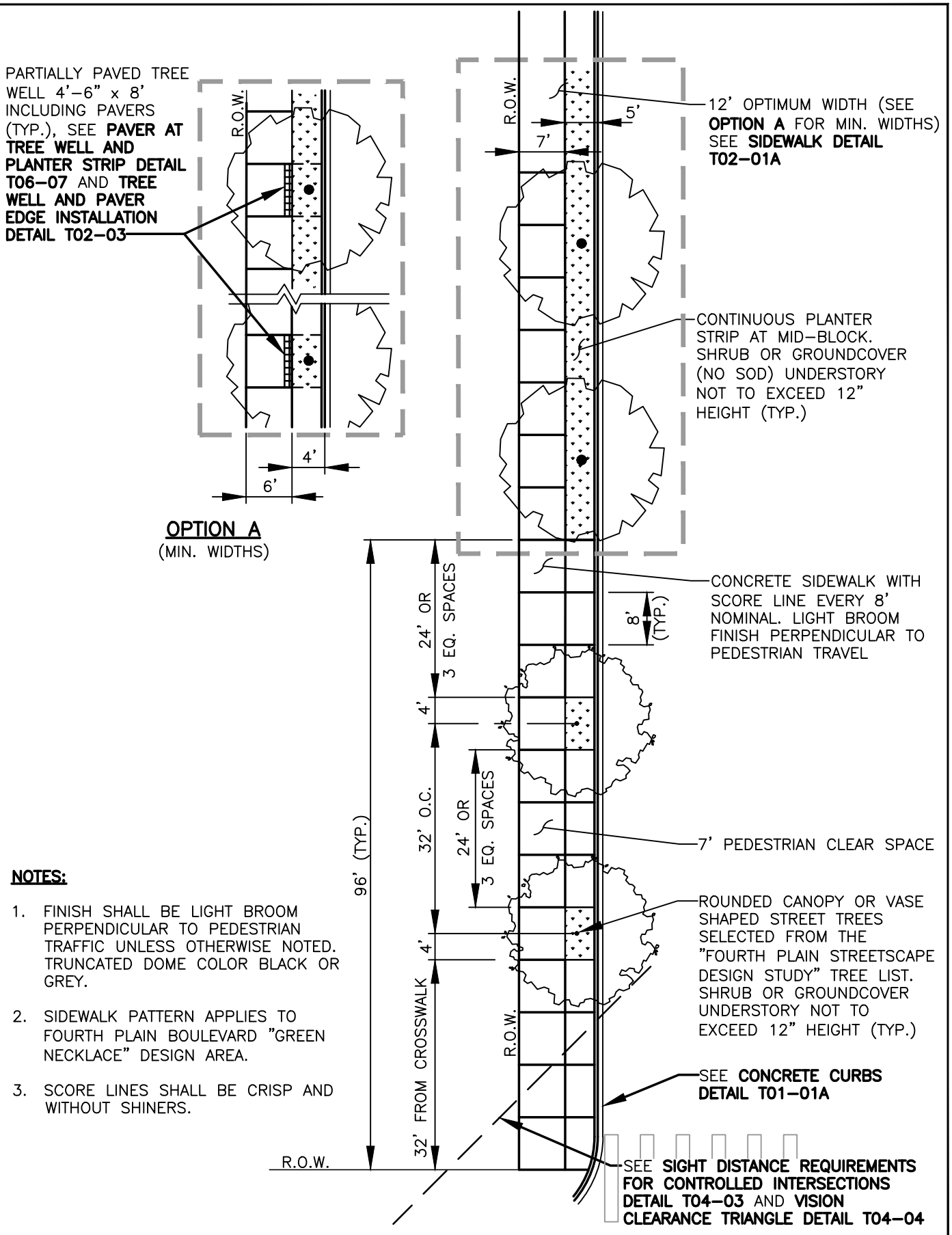

NOTES:

1. FINISH SHALL BE LIGHT BROOM PERPENDICULAR TO PEDESTRIAN TRAFFIC UNLESS OTHERWISE NOTED. TRUNCATED DOME COLOR BLACK OR GREY.
2. SIDEWALK PATTERN APPLIES TO FOURTH PLAIN BOULEVARD "GREEN NECKLACE" DESIGN AREA.
3. SCORE LINES SHALL BE CRISP AND WITHOUT SHINERS.

REV NO.	DATE	BY	APPR
1	8/08	RAW	MHA
2	7/14	RAW	MHA
3	3/17	RAW	MHA
4	9/21	RAW	MHA

PUBLIC WORKS – STREETS AND TRANSPORTATION

APPROVED BY: M H Abdalla
ENGINEER MANAGER
APPROVED DATE: 9/1/2021

CITY OF Vancouver WASHINGTON

FOURTH PLAIN BOULEVARD "GREEN NECKLACE" SIDEWALK NORTH SIDE

STANDARD PLAN NUMBER
T06–04

I:\CITYAPPS\AUTOCAD\STD_DETAILS\DRAWING_FILES\T06–04

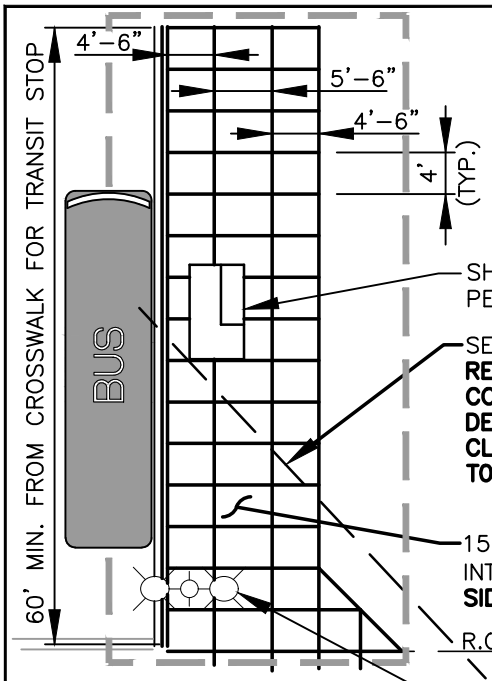

DETAIL A

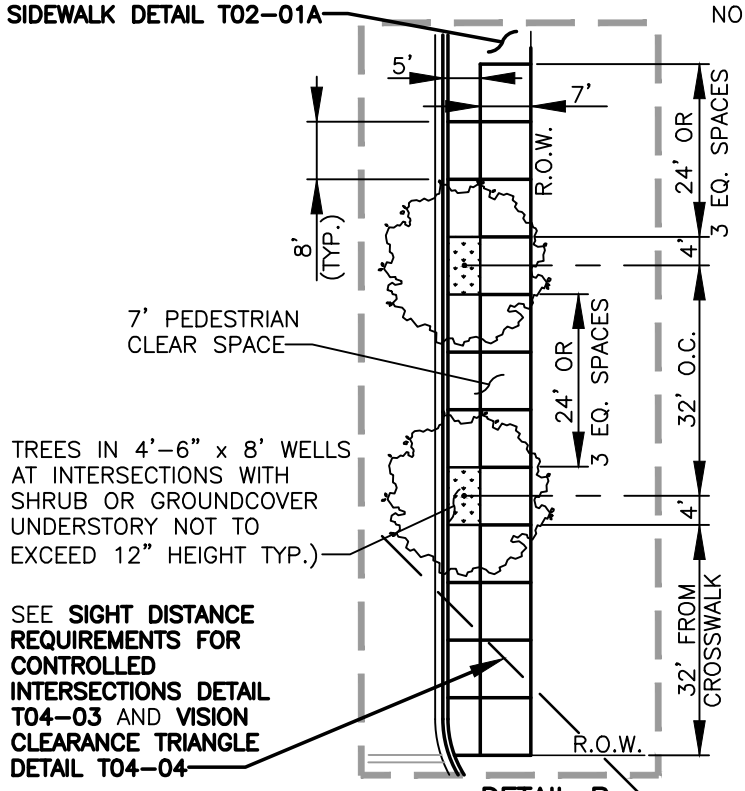

DETAIL B

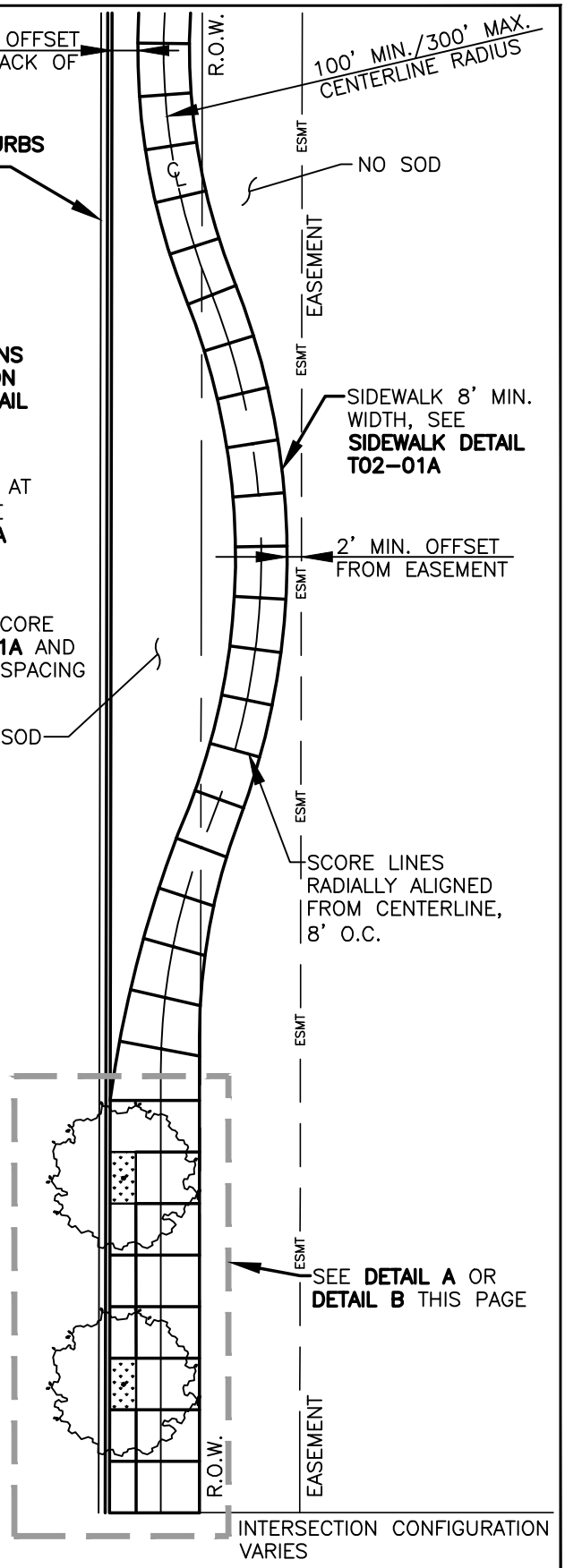

NOTES:

1. FINISH SHALL BE LIGHT BROOM PERPENDICULAR TO PEDESTRIAN TRAFFIC UNLESS OTHERWISE NOTED. TRUNCATED DOME COLOR BLACK OR GREY.
2. SIDEWALK PATTERN APPLIES TO FOURTH PLAIN BOULEVARD "GREEN NECKLACE" DESIGN AREA.
3. SCORE LINES SHALL BE CRISP AND WITHOUT SHINERS.

REV NO.	DATE	BY	APPR
1	8/08	RAW	MHA
2	7/14	RAW	MHA
3	3/17	RAW	MHA
4	9/21	RAW	MHA

PUBLIC WORKS – STREETS AND TRANSPORTATION

APPROVED BY: M H Abdalla
ENGINEER MANAGER
APPROVED DATE: 9/1/2021

CITY OF Vancouver WASHINGTON

FOURTH PLAIN BOULEVARD "GREEN NECKLACE" SIDEWALK SOUTH SIDE

STANDARD PLAN NUMBER
T06-05

I:\CITYAPPS\AUTOCAD\STD_DETAILS\DRAWING_FILES\T06-05

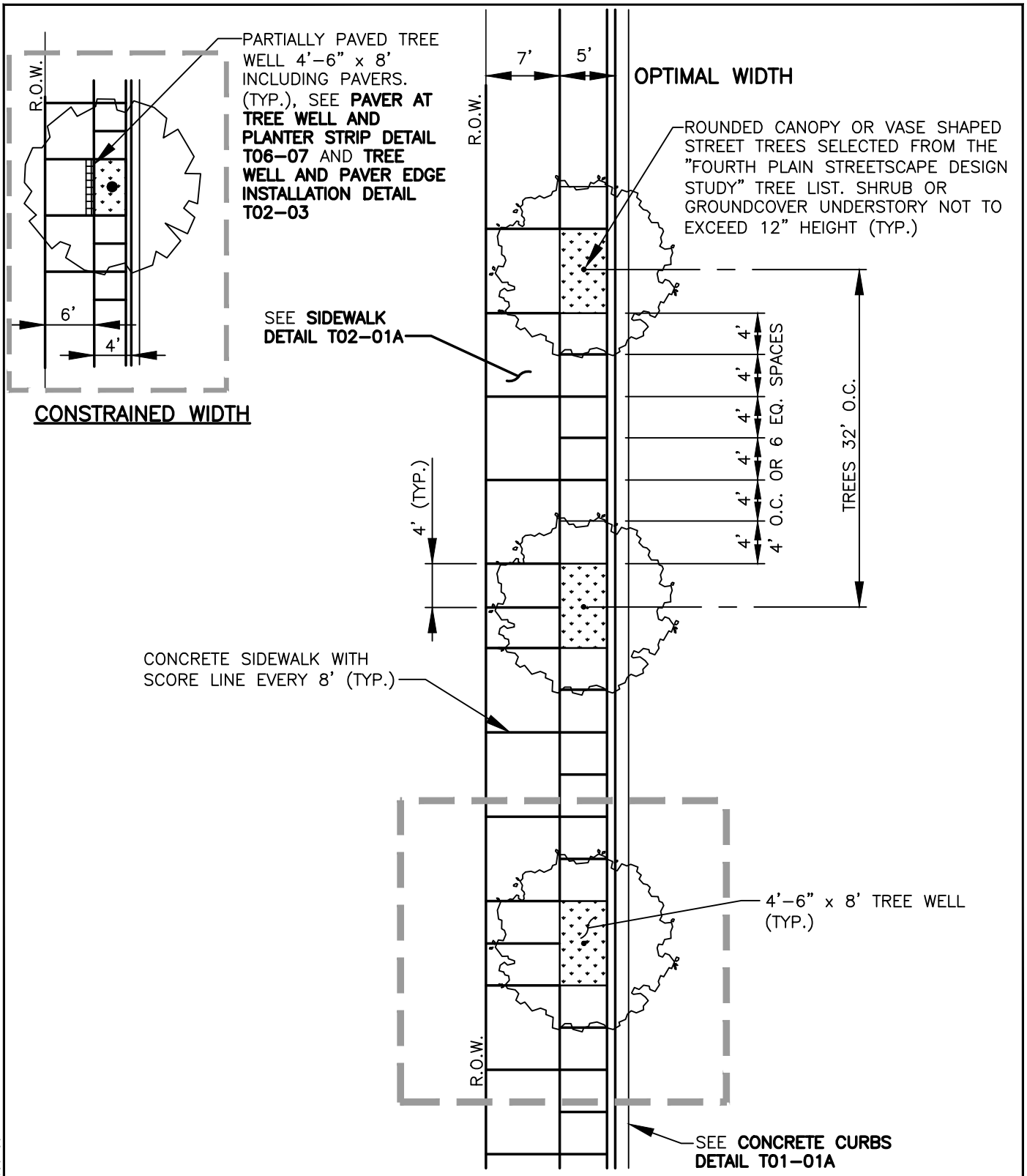

NOTES:

1. FINISH SHALL BE LIGHT BROOM PERPENDICULAR TO PEDESTRIAN TRAFFIC UNLESS OTHERWISE NOTED. TRUNCATED DOME COLOR BLACK OR GREY.
2. SIDEWALK PATTERN APPLIES TO FOURTH PLAIN BOULEVARD "COMMERCIAL" DESIGN AREA.
3. SCORE LINES SHALL BE CRISP AND WITHOUT SHINERS.

REV NO.	DATE	BY	APPR
1	8/08	RAW	MHA
2	7/14	RAW	MHA
3	3/17	RAW	MHA
4	9/21	RAW	MHA

PUBLIC WORKS – STREETS AND TRANSPORTATION

APPROVED BY: M H Abdalla
ENGINEER MANAGER
APPROVED DATE: 9/1/2021

CITY OF Vancouver WASHINGTON

FOURTH PLAIN BOULEVARD "COMMERCIAL" STREET SIDEWALK

STANDARD PLAN NUMBER
T06–06

I:\CITYAPPS\AUTOCAD\STD_DETAILS\DRAWING_FILES\T06–06

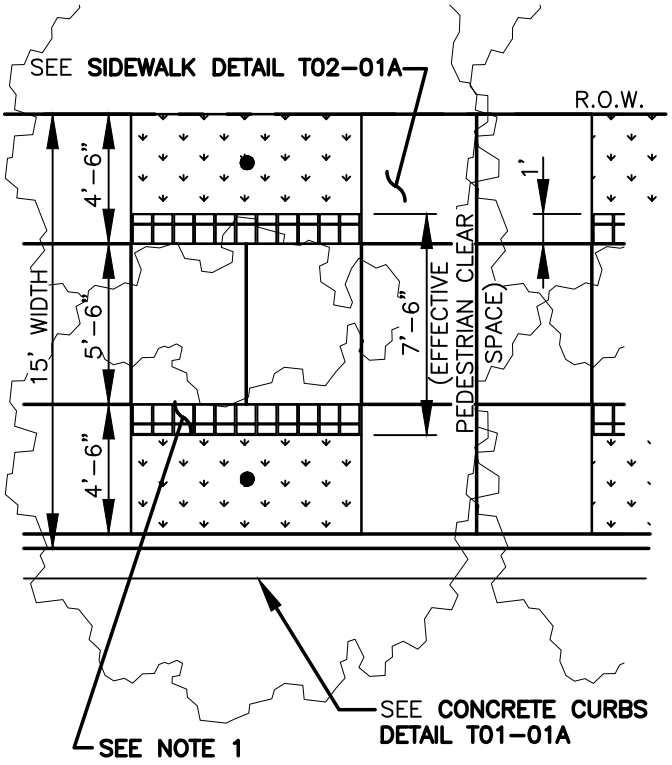

BOSQUE FEATURE: PAVER AT TREE WELL

NO SCALE

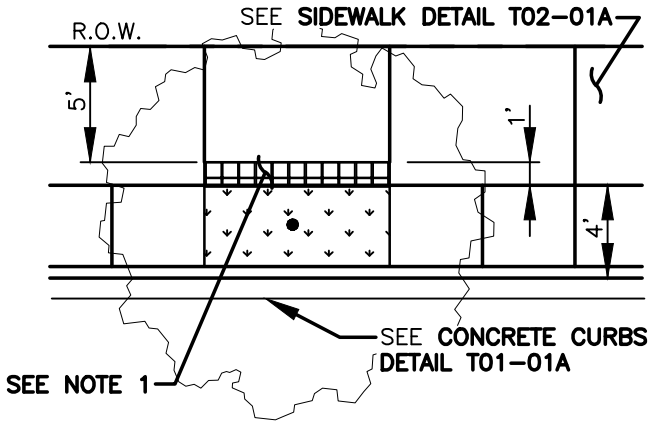

GREEN NECKLACE NORTH AND COMMERCIAL STREET: PAVER AT TREE WELL

NO SCALE

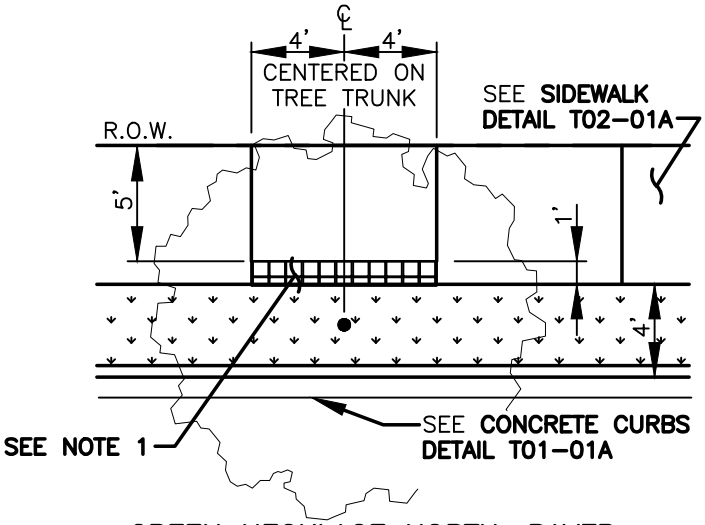

GREEN NECKLACE NORTH: PAVER AT PLANTER STRIP

NO SCALE

NOTE:

1. (1) ROW EACH OF SINGLE AND DOUBLE HOLLAND PAVERS, LAID AS SHOWN, EQUAL SPACING. SEE **SECTION A–A** THIS DRAWING. COLOR: CHARCOAL WITH STANDARD FINISH.

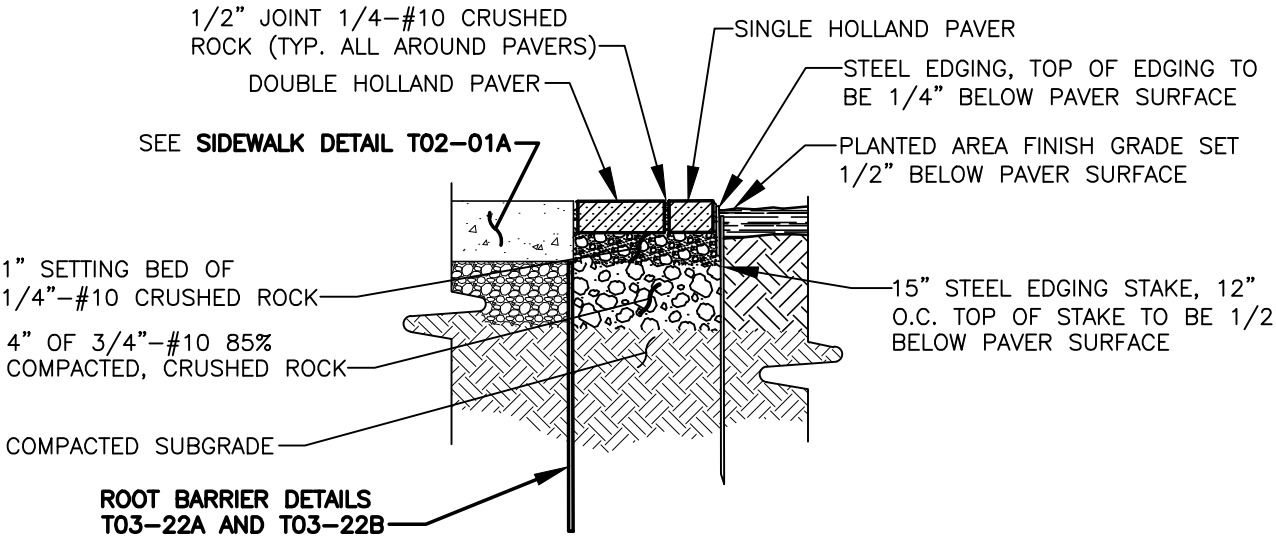

SECTION A–A

NO SCALE

REV NO.	DATE	BY	APPR
1	8/08	RAW	MHA
2	7/14	RAW	MHA
3	3/17	RAW	MHA
4	9/21	RAW	MHA

PUBLIC WORKS – STREETS AND TRANSPORTATION

APPROVED BY: M H Abdalla
ENGINEER MANAGER

APPROVED DATE: 9/1/2021

CITY OF Vancouver WASHINGTON

FOURTH PLAIN BOULEVARD PAVER AT TREE WELL AND PLANTER STRIP

STANDARD PLAN NUMBER

T06–07

I:\CITYAPPS\AUTOCAD\STD_DETAILS\DRAWING_FILES\T06–07

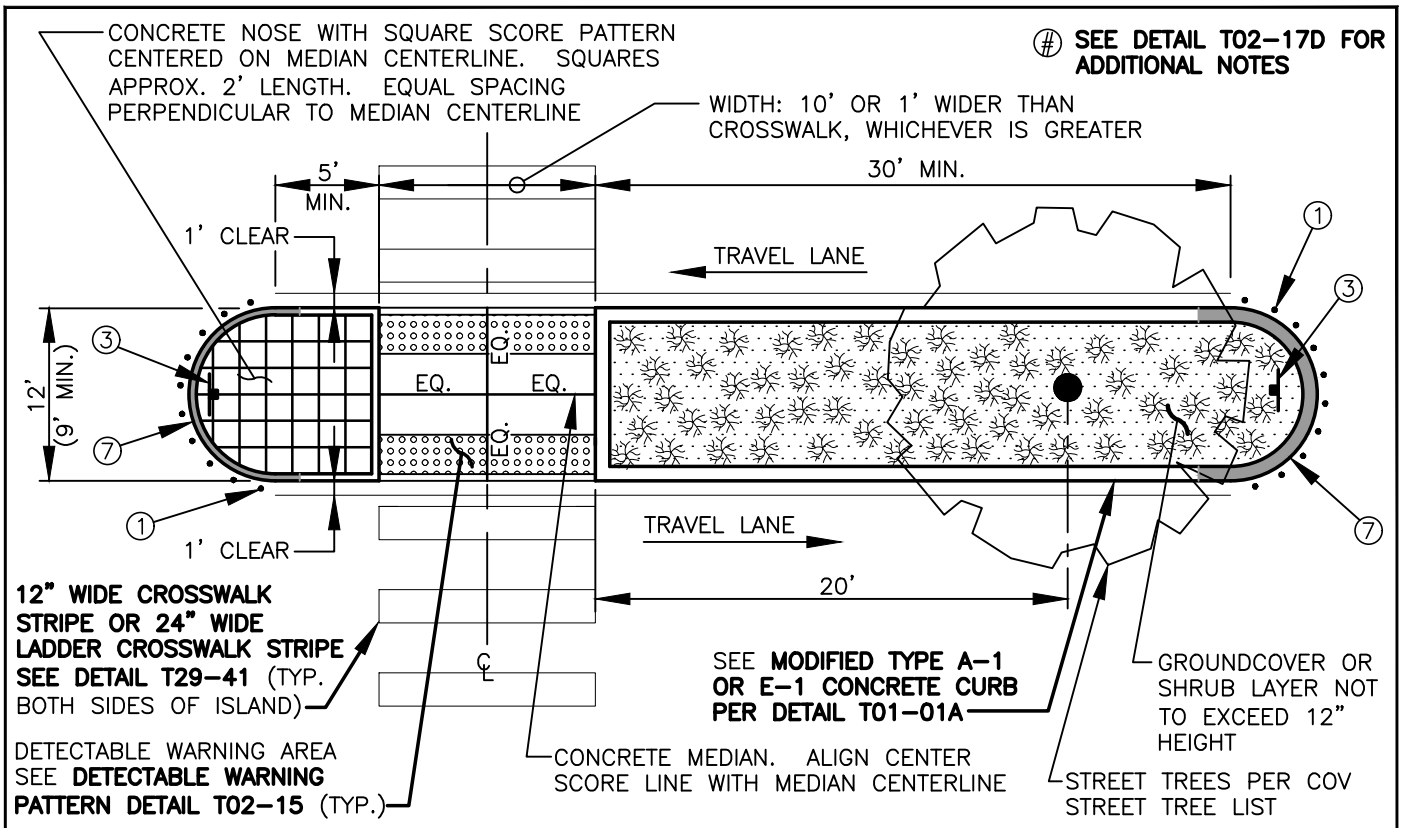

REFUGE ISLAND

NO SCALE

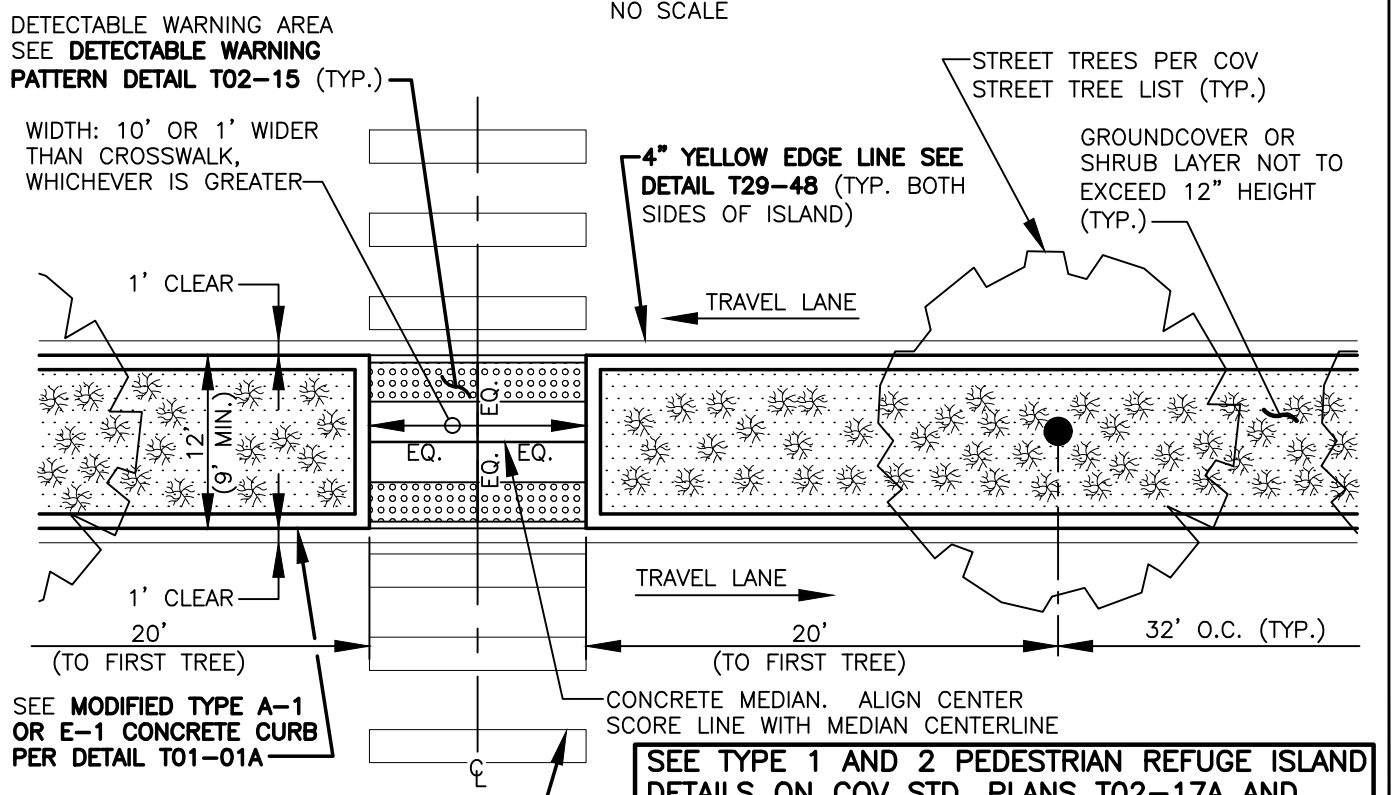

MEDIAN OPENING

NO SCALE

SEE TYPE 1 AND 2 PEDESTRIAN REFUGE ISLAND DETAILS ON COV STD. PLANS T02-17A AND T02-17B FOR ADDITIONAL INFORMATION. SEE TYPICAL PEDESTRIAN REFUGE ISLAND SECTIONS ON COV STD. PLAN T02-17C. SEE TYPICAL PEDESTRIAN REFUGE ISLAND NOTES ON COV STD. PLAN T02-17D.

REV NO.	DATE	BY	APPR
1	8/08	RAW	MHA
2	7/14	RAW	MHA
3	3/17	RAW	MHA
4	9/21	RAW	MHA

PUBLIC WORKS – STREETS AND TRANSPORTATION

APPROVED BY: M H Abdalla ENGINEER MANAGER

APPROVED DATE: 9/1/2021

CITY OF Vancouver WASHINGTON

FOURTH PLAIN BOULEVARD PEDESTRIAN ACCESS AT UNSIGNALIZED LOCATIONS

STANDARD PLAN NUMBER T06-08

I:\CITYAPPS\AUTOCAD\STD_DETAILS\DRAWING_FILES\T06-08

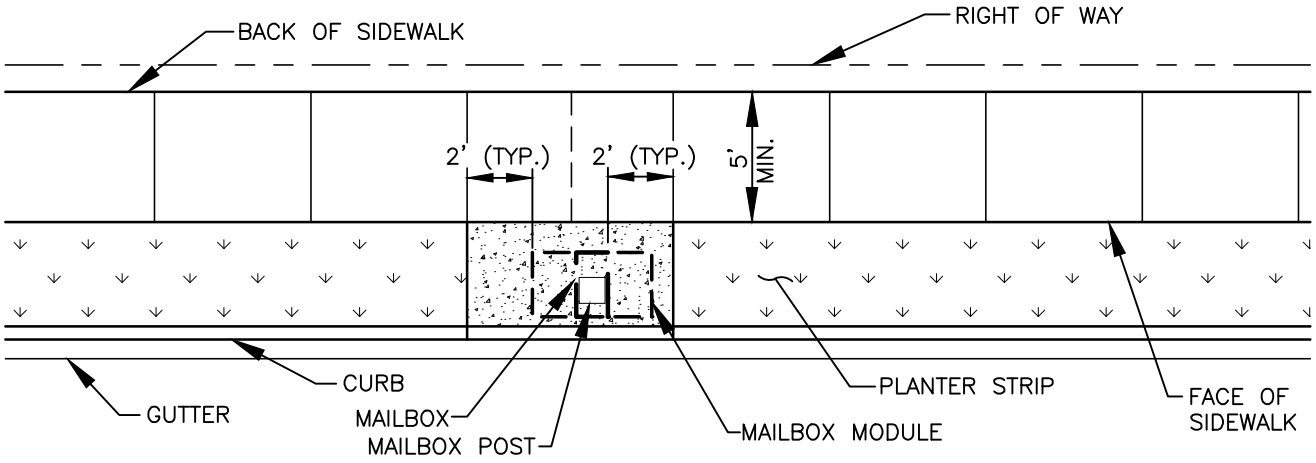

MAILBOX IN PLANTER STRIP

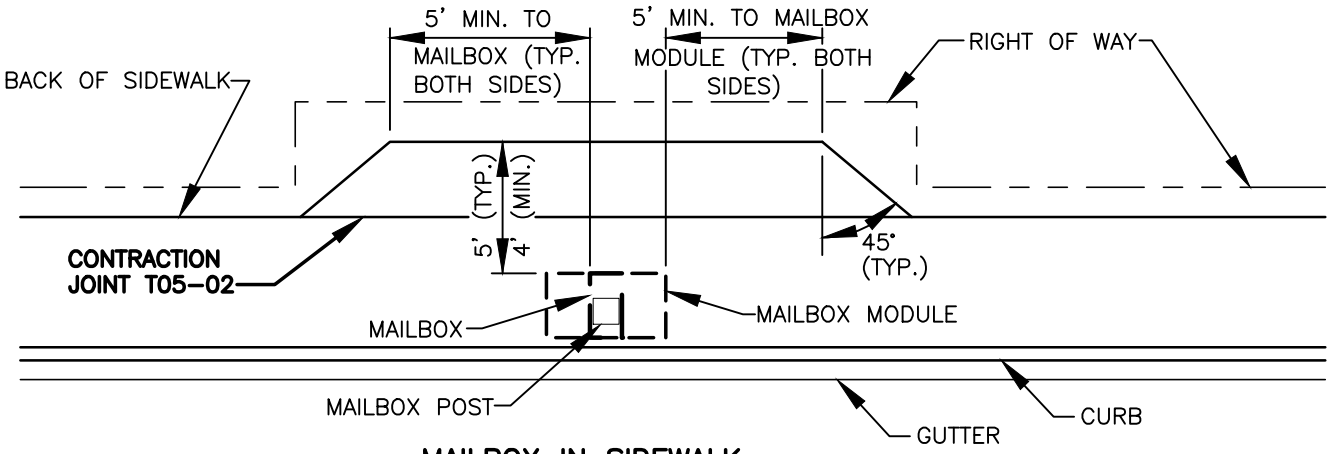

MAILBOX IN SIDEWALK

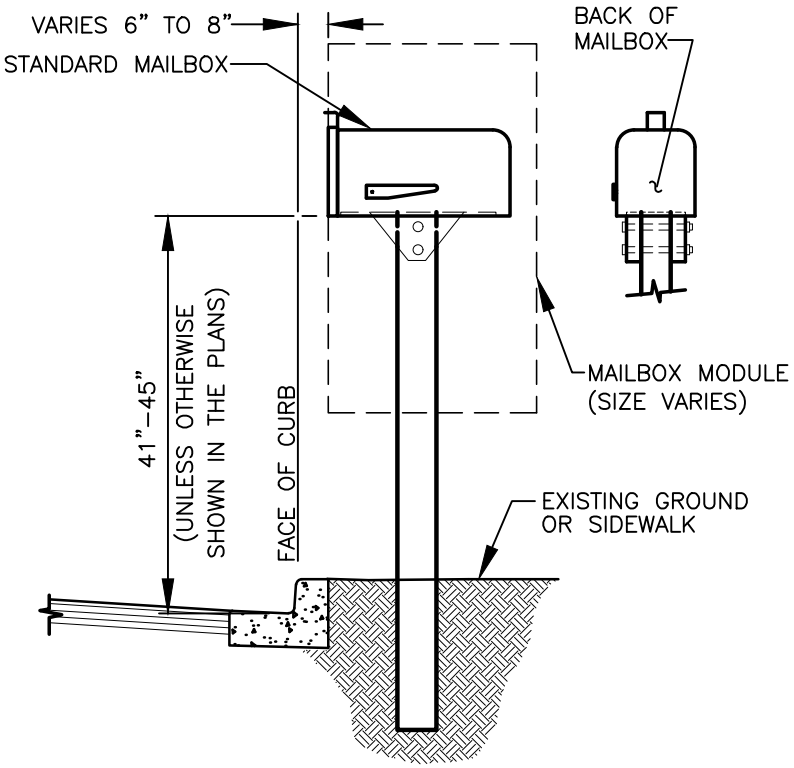

NOTES:

1. SEE WSDOT STANDARD PLAN H-70.10-xx TO H-70.30-xx FOR MAILBOX, POST, BRACKET AND OTHER INSTALLATION DETAILS.
2. MAILBOXES MUST BE POSTMASTER APPROVED.
3. LOCATION OF MAILBOXES ARE SUBJECT TO APPROVAL BY ENGINEER FOR ACCESS AND SIGHT DISTANCE REQUIREMENTS SEE **INTERSECTION SIGHT DISTANCE REQUIREMENTS DETAIL T04-03** AND **VISION CLEARANCE TRIANGLE DETAIL T04-04.**
4. INSTALL EXPANSION JOINT MATERIAL AROUND MAILBOX POST WHEN SET IN SIDEWALK.
5. EXTEND SIDEWALK JOINTS THROUGH WIDENED SIDEWALK SECTION.
6. RESIDENTIAL ACCESS TO MODULE MAILBOX WILL BE ON SIDEWALK SIDE.

REV NO.	DATE	BY	APPR
1	8/04	RAW	MHA
2	3/06	RAW	MHA
3	2/07	RAW	MHA
4	8/08	RAW	MHA
5	7/14	RAW	MHA
6	9/21	RAW	MHA

PUBLIC WORKS – STREETS AND TRANSPORTATION

APPROVED BY: M H Abdalla
ENGINEER MANAGER

APPROVED DATE: 9/1/2021

CITY OF Vancouver WASHINGTON

TYPICAL MAILBOX PLACEMENT

STANDARD PLAN NUMBER

T07-01

I:\CITYAPPS\AUTOCAD\STD_DETAILS\DRAWING_FILES\T07-01

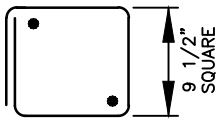

1–#4 BAR WRAPPED

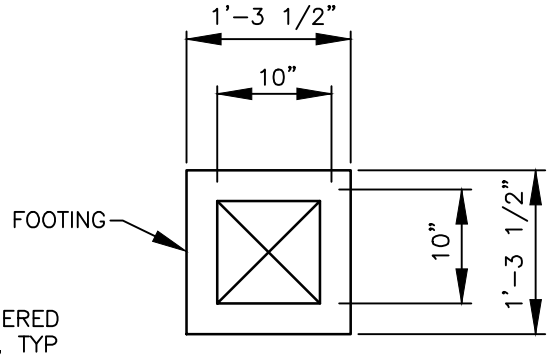

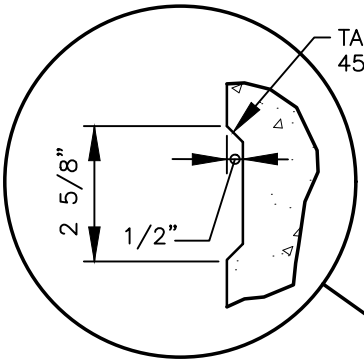

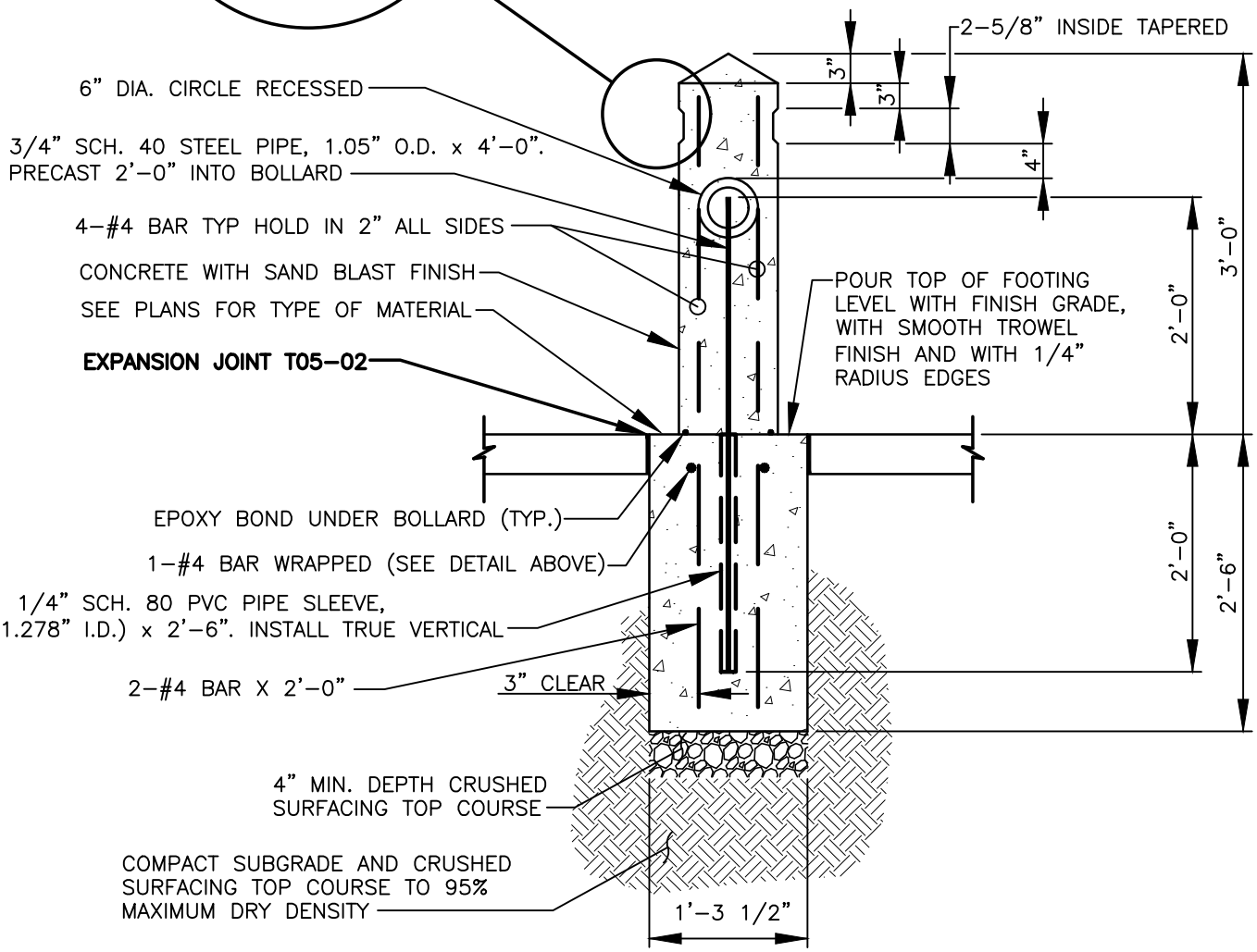

NOTE:

BOLLARD IS DESIGNED TO BE FIXED BUT REPLACEABLE. FOR REMOVABLE BOLLARD, OMIT EPOXY BOND.

REV NO.	DATE	BY	APPR
1	3/06	RAW	MHA
2	2/07	RAW	MHA
3	8/08	RAW	MHA
4	7/14	RAW	MHA
5	4/18	RAW	MHA
6	9/21	RAW	MHA

PUBLIC WORKS – STREETS AND TRANSPORTATION

APPROVED BY: M H Abdalla
ENGINEER MANAGER

APPROVED DATE: 9/1/2021

CITY OF Vancouver WASHINGTON

PRECAST CONCRETE BOLLARD

STANDARD PLAN NUMBER

T07–02

I:\CITYAPPS\AUTOCAD\STD_DETAILS\DRAWING_FILES\T07–02

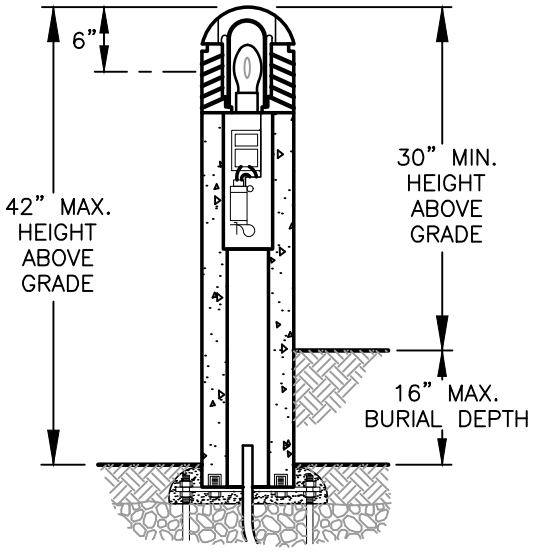

SINGLE FUNCTION LUMINAIRE
CONCRETE SHAFT

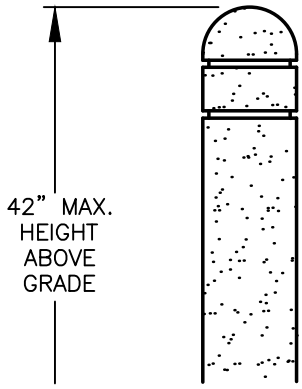

BOLLARD
CONCRETE SHAFT

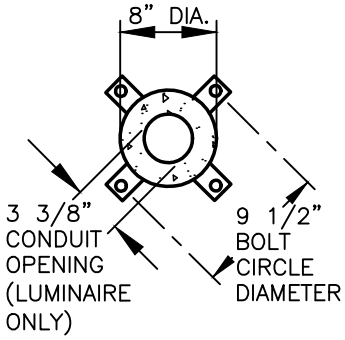

BASE PLAN

NOTES:

1. CERTIFICATION SHALL BE UNDERWRITERS LABORATORIES LISTED FOR 120 AND 240 VOLT WET LOCATIONS.
2. TOP CAP SHALL BE A ONE PIECE ALUMINUM CASTING 3/16" MINIMUM THICKNESS, SECURED TO LOUVERS BY CONCEALED ALLEN SCREWS IN KEYHOLE SLOTS. FOR RE-LAMPING ACCESS, ALLEN SCREWS SHALL NOT REQUIRE COMPLETE REMOVAL.
3. LOUVERS SHALL BE A ONE PIECE ALUMINUM CASTING WITH VERTICAL SUPPORT RIBS AT 90° INTERVALS. HORIZONTAL LOUVER BLADES SHALL HAVE A 1 3/4" DEPTH, A 65° UPWARD PITCH AND PROVIDE LIGHT SOURCE CUTOFF ABOVE HORIZONTAL. LOUVER CASTING SHALL BE SECURED TO SHAFT BY FOUR INTERNAL TIE RODS.
4. LAMP ENCLOSURE SHALL BE ONE PIECE TEMPERED MOLDED GLASS WITH INTERNAL FLUTES AND FULL GASKETING AT BOTTOM EDGE.
5. SOCKET SHALL BE PORCELAIN MEDIUM BASE RATED 4KV.
6. FIXTURE HEAD SHALL ALLOW FLOW-THROUGH VENTILATION AROUND AND ABOVE THE LAMP ENCLOSURE.
7. SHAFT CEMENT SHALL CONFORM TO CURRENT SPECIFICATIONS FOR "PORTLAND CEMENT." ASTM C150, TYPE I OR II. AGGREGATES SHALL MEET CURRENT REQUIREMENTS OF "SPECIFICATIONS FOR CONCRETE AGGREGATES," ASTM C33. WATER SHALL BE CLEAN AND FREE FROM DELETERIOUS AMOUNTS OF SILT, OIL, ACIDS, ALKALIES OR ORGANIC MATERIALS. WIRE FOR REINFORCEMENT SHALL CONFORM TO ASTM A185. STEEL FOR LUGS AND PLATES SHALL CONFORM TO ASTM A36, OR A283 GRADE D.
8. BALLAST SHALL BE HIGH POWER FACTOR FOR -20°F STARTING, FACTORY MOUNTED TO A RIGID HARNESS FOR FIELD WIRING AND SUSPENSION FROM FIXTURE WITHIN THE CONCRETE SHAFT.
9. ANCHOR BOLTS SHALL BE FOUR 3/8" X 10" + 2" ZINC PLATED L-HOOKS, EACH WITH TWO NUTS, WASHERS AND A RIGID PRESSED BOARD TEMPLATE.
10. FINISH SHALL BE T.G.I.C. THERMOSET POLYESTER POWDER-COAT PAINT APPLIED OVER A CHROMATE CONVERSION COATING. NATURAL GRAY SHALL BE USED FOR THE CONCRETE COLOR FINISH. LUMINAIRE FINISH SHALL BE BLACK.
11. SURFACE SHALL BE MEDIUM SAND-BLASTED WITH ANTI-GRAFFITI SEALER. COLOR SHALL BE NATURAL GRAY OR INTEGRAL IN CONCRETE MIX.
12. CURE AND STRENGTH SHALL ALLOW FOR COMPLETION OF THE HYDRATION PROCESS, AND RESULT IN A 28 DAY COMPRESSIVE STRENGTH OF NOT LESS THAN 4,500 PSI.
13. MANUFACTURE SHALL BE BY FIBERGLASS MOLDS TO INSURE UNIFORM PARTS. MOLD PARTING LINES MAY BE SLIGHTLY VISIBLE IN FINISHED PARTS.
14. ANCHORAGE SHALL BE BY FOUR STEEL MOUNTING TABS FOR INSTALLATION ON FOUR 1/2" X 10" + 2" ZINC ELECTROPLATED L-HOOK ANCHOR BOLTS. EACH ANCHOR BOLT IS SUPPLIED WITH TWO NUTS, TWO WASHERS, AND A RIGID PRESSED BOARD TEMPLATE.
15. ELECTRICAL MODULE SHALL BE 100 WATT COATED 120 LINE VOLTS, 129 LINE WATTS AND 1.15 MAX. AMPS.
16. SHIPMENT SHALL BE PALLETIZED WITH ADEQUATE HOLD-DOWNS TO PREVENT LOAD MOVEMENT IN TRANSIT.
17. **KIM LIGHTING MODEL. SEE CITY'S APPROVED PRODUCTS LIST FOR PART NUMBER.**
18. SEE **TYPICAL CONNECTING PUBLIC STREET WITH PATHWAYS AND LIGHTING DETAIL T07-03B** FOR ADDITIONAL INFORMATION.

REV NO.	DATE	BY	APPR
1	2/07	RAW	CJC
2	8/08	RAW	CJC
3	2/07	RAW	CJC
4	4/18	RAW	CJC
5	9/21	RAW	CJC

PUBLIC WORKS - STREETS AND TRANSPORTATION

APPROVED BY: TRAFFIC ENGINEER MANAGER

APPROVED DATE: 9/1/2021

CITY OF Vancouver WASHINGTON

VANDAL RESISTANT BOLLARD (LIGHTED AND NON-LIGHTED)

STANDARD PLAN NUMBER

T07-03A

I:\CITYAPPS\AUTOCAD\STD_DETAILS\DRAWING_FILES\T07-03A

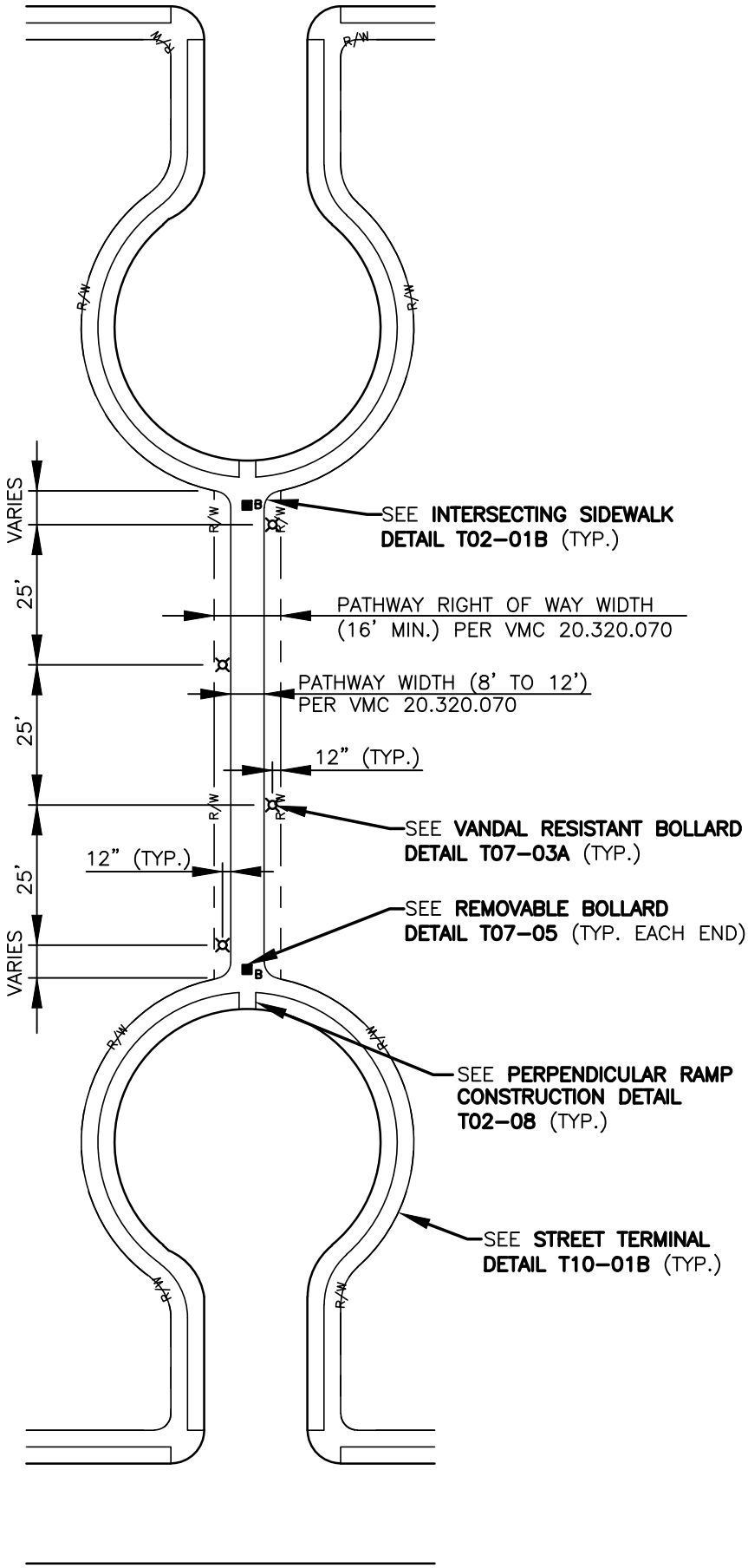

REV NO.	DATE	BY	APPR
1	2/07	RAW	CJC
2	8/08	RAW	CJC
3	1/15	RAW	CJC
4	9/21	RAW	CJC

PUBLIC WORKS – STREETS AND TRANSPORTATION

APPROVED BY: TRAFFIC ENGINEER MANAGER

APPROVED DATE: 9/1/2021

CITY OF Vancouver WASHINGTON

TYPICAL CONNECTING PUBLIC STREET WITH PATHWAYS AND LIGHTING

STANDARD PLAN NUMBER

T07–03B

I:\CITYAPPS\AUTOCAD\STD_DETAILS\DRAWING_FILES\T07–03B

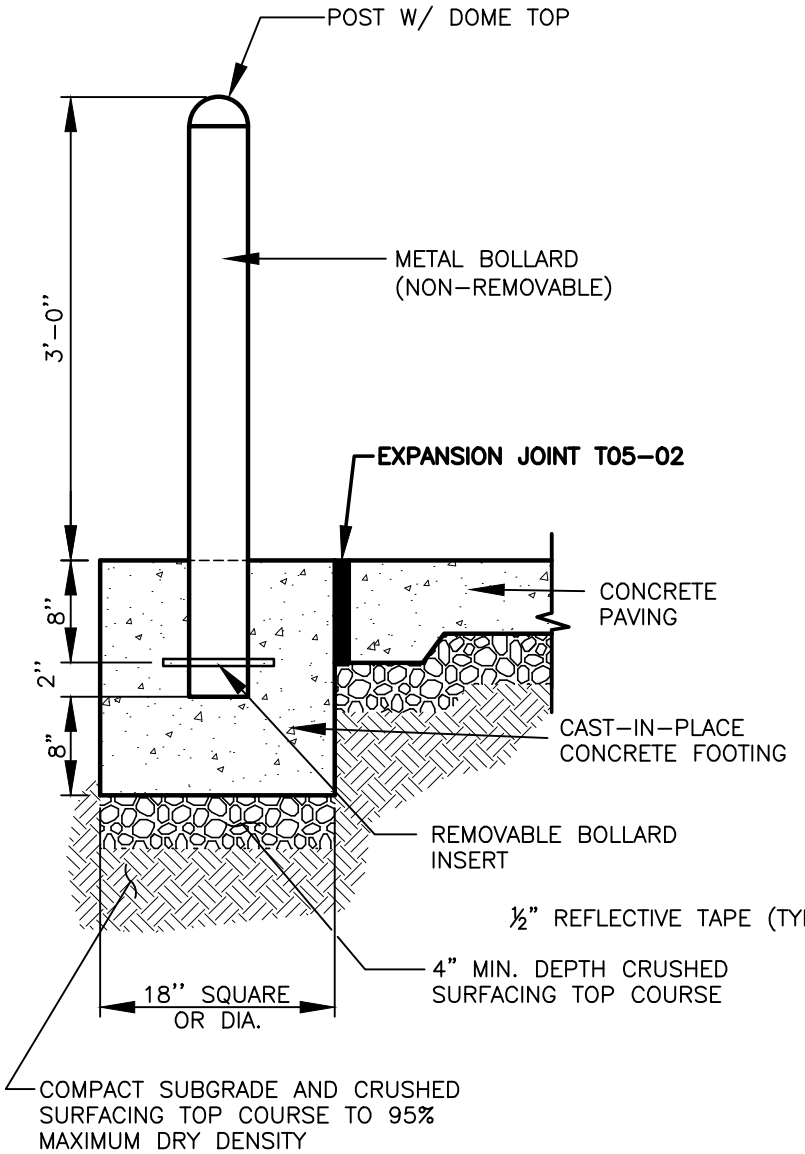

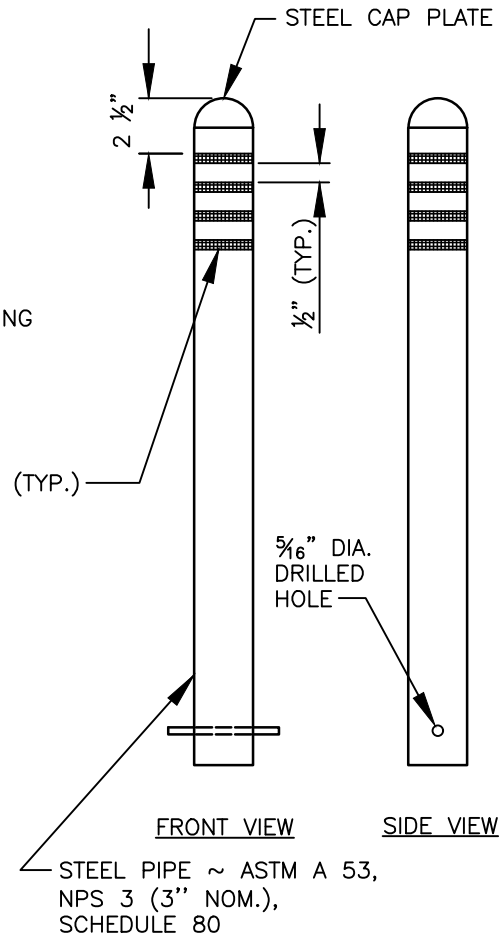

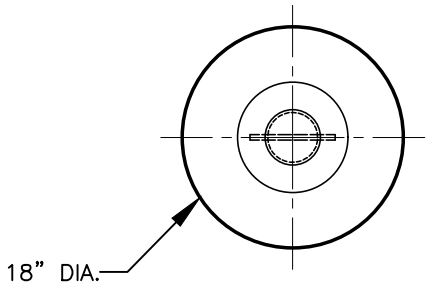

ROUND FOOTING

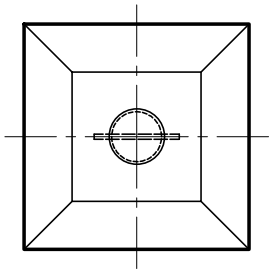

SQUARE FOOTING

REV NO.	DATE	BY	APPR
1	3/06	RAW	MHA
2	2/07	RAW	MHA
3	8/08	RAW	MHA
4	7/14	RAW	MHA
5	4/18	RAW	MHA
6	9/21	RAW	MHA

PUBLIC WORKS – STREETS AND TRANSPORTATION

APPROVED BY: M H Abdalla
ENGINEER MANAGER

APPROVED DATE: 9/1/2021

CITY OF Vancouver WASHINGTON

TYPE 2 BOLLARD

STANDARD PLAN NUMBER

T07–04

I:\CITYAPPS\AUTOCAD\STD_DETAILS\DRAWING_FILES\T07–04

INSTALLATION SEQUENCE

1. DIG FOOTING HOLE AND SET POST FOOTING SLEEVE PLUMB AND SQUARE IN CONCRETE.
2. INSERT REMOVABLE BOLLARD INSERT INTO BOLLARD.
3. TIGHTEN HEX SOCKET SET SCREWS.
4. SET THE BOLLARD AND REMOVABLE BOLLARD INSERT INTO THE POST FOOTING SLEEVE.

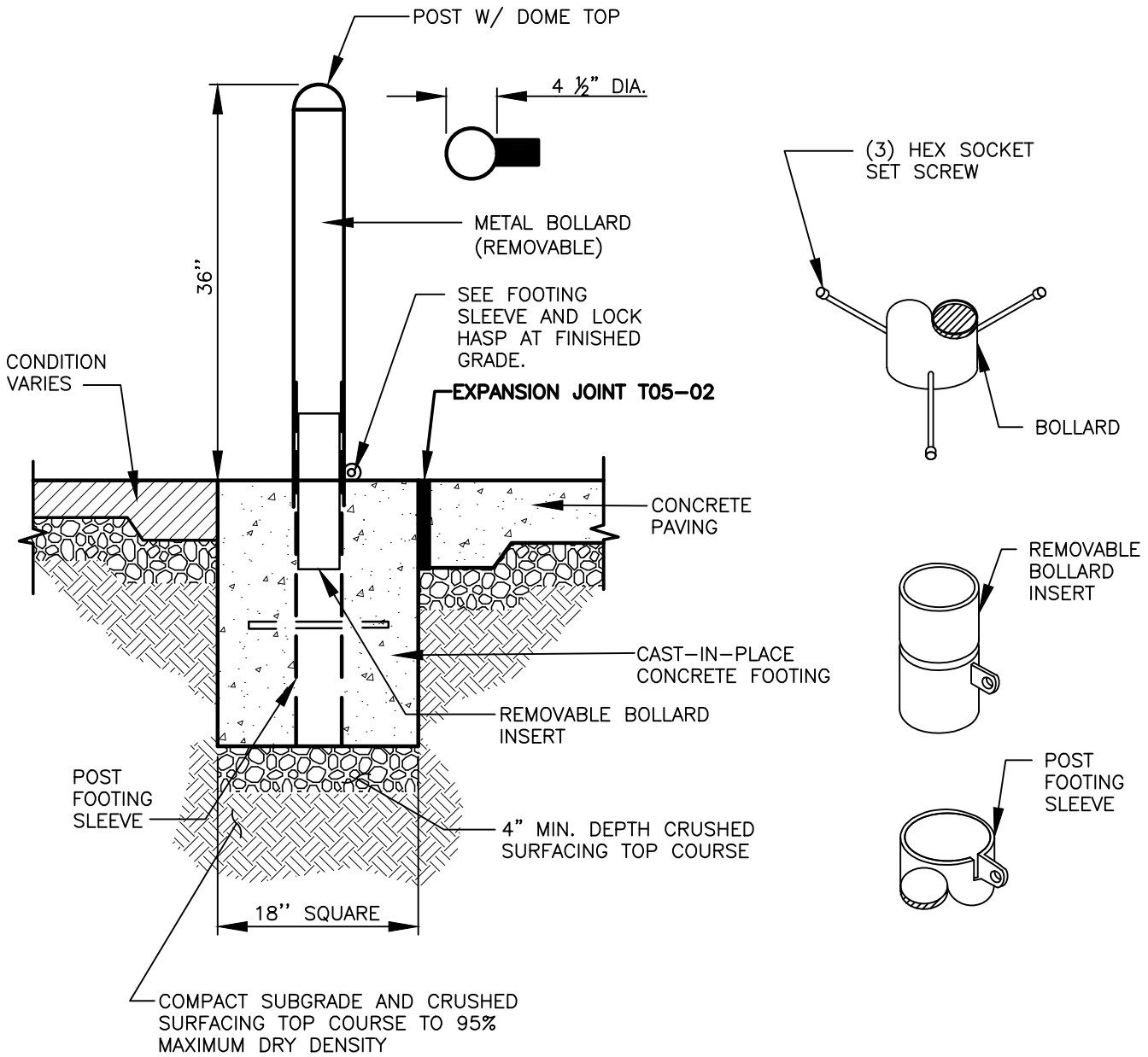

REV NO.	DATE	BY	APPR
1	3/06	RAW	MHA
2	2/07	RAW	MHA
3	8/08	RAW	MHA
4	7/14	RAW	MHA
5	4/18	RAW	MHA
6	9/21	RAW	MHA

PUBLIC WORKS – STREETS AND TRANSPORTATION

APPROVED BY: M H Abdalla
ENGINEER MANAGER
APPROVED DATE: 9/1/2021

CITY OF Vancouver WASHINGTON

REMOVABLE BOLLARD

STANDARD PLAN NUMBER
T07-05

I:\CITYAPPS\AUTOCAD\STD_DETAILS\DRAWING_FILES\T07-05

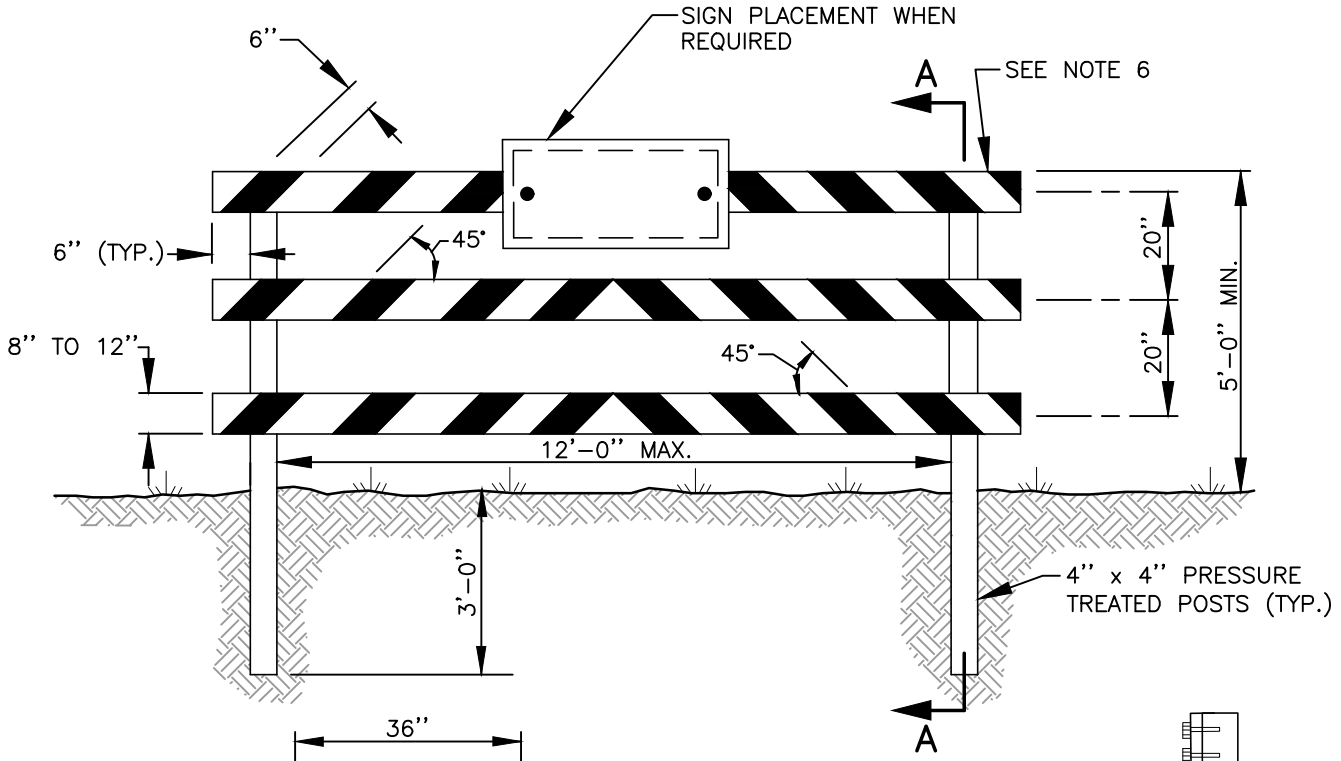

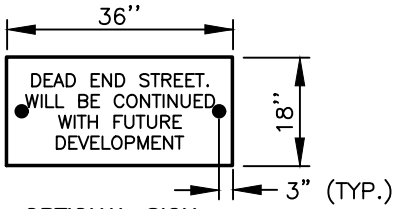

OPTIONAL SIGN

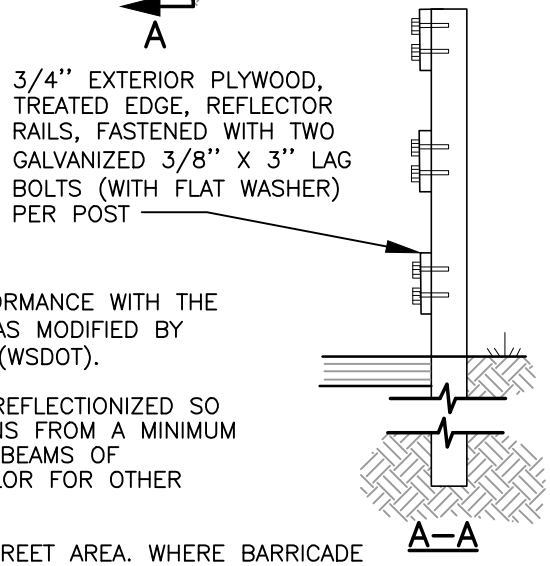

NOTES:

1. BARRICADES AND MARKINGS SHALL BE INSTALLED IN CONFORMANCE WITH THE MANUAL OF UNIFORM TRAFFIC CONTROL DEVICES (MUTCD) AS MODIFIED BY THE WASHINGTON STATE DEPARTMENT OF TRANSPORTATION (WSDOT).

2. THE ENTIRE AREA OF WHITE AND RED STRIPES SHALL BE REFLECTIONIZED SO AS TO BE VISIBLE UNDER NORMAL ATMOSPHERIC CONDITIONS FROM A MINIMUM DISTANCE OF 1,000 FEET WHEN ILLUMINATED BY THE LOW BEAMS OF STANDARD AUTOMOBILE HEADLIGHTS. THE PREDOMINANT COLOR FOR OTHER BARRICADE COMPONENTS SHALL BE WHITE.

3. BARRICADE SECTION SHALL EXTEND ACROSS THE ENTIRE STREET AREA. WHERE BARRICADE EXTENDS ENTIRELY ACROSS A ROADWAY, THE STRIPES SHALL SLOPE DOWNWARD IN THE DIRECTION TOWARD WHICH TRAFFIC MUST TURN IN DETOURING. WHERE BOTH RIGHT AND LEFT TURNS ARE ALLOWED, THE CHEVRON STRIPING SHALL SLOPE DOWNWARD IN BOTH DIRECTIONS FROM THE CENTER OF THE BARRICADE. WHERE NO TURNS ARE INTENDED, THE STRIPES SHOULD BE POSITIONED TO SLOPE DOWNWARD TOWARD THE CENTER OF THE BARRICADE OR BARRICADES. RAILS SHALL BE PLACED BOTH FRONT AND BACK OF BARRICADE IF REQUIRED FOR TWO–WAY TRAFFIC. WHERE NO TURNS ARE INTENDED, THE STRIPES SHOULD BE POSITIONED TO SLOPE DOWNWARD TOWARD THE CENTER OF THE BARRICADE OR BARRICADES. RAILS SHALL BE THE SAME SIZE. FOR WIDER APPLICATIONS, MULTIPLE SECTIONS, SPACED NO FURTHER THAN 4'' SHALL BE USED.

4. RAILS SHALL BE PLACE BOTH FRONT AND BACK OF BARRICADE IF REQUIRED FOR TWO–WAY TRAFFIC. RAILS SHALL BE THE SAME SIZE.

5. LUMBER SHALL BE STANDARD GRADE OR BETTER.

6. IF A SIGN IS REQUIRED, FIELD DRILL TWO HOLES TO ACCOMMODATE GALVANIZED 3/8'' MACHINE BOLT, WASHER AND NUT. THE SIGN SHALL BE INSTALLED SO THAT THE CENTER RAIL IS NOT COVERED.

7. FOR TEMPORARY BARRIER SEE WSDOT STANDARD PLAN H–2.

8. 2' MIN. CLEARANCE FROM THE EDGE OF THE TRAVEL LANE TO THE EDGE OF THE BARRICADE.

REV NO.	DATE	BY	APPR
1	8/08	RAW	MHA
2	7/14	RAW	MHA
3	9/21	RAW	MHA

PUBLIC WORKS – STREETS AND TRANSPORTATION

APPROVED BY: M H Abdalla
ENGINEER MANAGER
APPROVED DATE: 9/1/2021

CITY OF Vancouver WASHINGTON

TYPE III BARRICADE

STANDARD PLAN NUMBER T07–06

I:\CITYAPPS\AUTOCAD\STD_DETAILS\DRAWING_FILES\T07–06

I:\CITYAPPS\AUTOCAD\STD_DETAILS\DRAWING_FILES\T07-07A

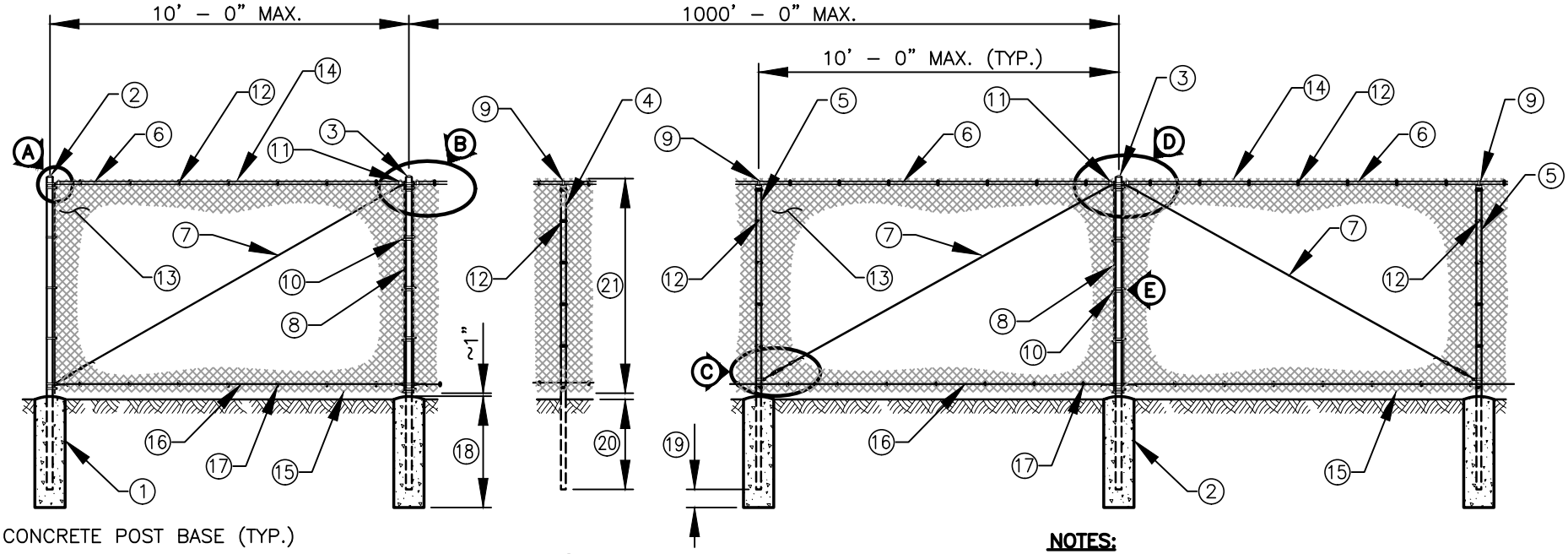

1. CONCRETE POST BASE (TYP.)
2. END OR CORNER POST AND CAP (TYP.)
3. PULL POST – SPACED AT 1,000' (FT.) MAX. (TYP.)
4. LINE POST – SPACED AT ~10' (FT.) MAX. (TYP.)
5. BRACE POST (TYP.)
6. TOP RAIL
7. TENSION WIRE
8. STRETCHER BAR (TYP.)
9. FENCE POST LOOP CAP
10. FABRIC BAND (TYP.)
11. FENCE RAIL END (TYP.)
12. TIE WIRE (TYP.)
13. CHAIN LINK FENCE FABRIC (TYP.)
14. TWISTED SELVAGE (TYP.)
15. TWISTED KNUCKLED SELVAGE (TYP.)
16. TENSION WIRE ALONG BOTTOM OF FENCE (TYPE 3 FENCE ONLY) (TYP.)
17. HOG RINGS (TYPE 3 FENCE ONLY) SPACED AT 24" (IN.) MAX. (TYP.)
18. POST BASE DEPTH:
    TYPE 3 FENCE = 3'–0" (TYP.)
    TYPE 4 FENCE = 2'–0" (TYP.)
19. CONCRETE DEPTH BELOW POST:
    TYPE 3 FENCE = 0'–6" (TYP.)
    TYPE 4 FENCE = 0'–2" (TYP.)
20. LINE POST DEPTH:
    TYPE 3 FENCE = 2'–6" (TYP.)
    TYPE 4 FENCE = 1'–10" (TYP.)
21. FABRIC HEIGHT:
    TYPE 3 FENCE = 6'–0" (TYP.)
    TYPE 4 FENCE = 4'–0" (TYP.)

NOTES:

1. ALL CONCRETE POST BASES SHALL BE 10" (IN) MINIMUM DIAMETER.
2. ALONG THE TOP AND BOTTOM, USING HOG RINGS, FASTEN THE CHAIN LINK FENCE FABRIC TO THE TENSION WIRE WITHIN THE LIMITS OF THE FIRST FULL FABRIC WEAVE.
3. DETAILS ARE ILLUSTRATIVE AND SHALL NOT LIMIT HARDWARE DESIGN OR POST SELECTION OF ANY PARTICULAR FENCE TYPE.
4. FENCING SHALL BE USED FOR SECURITY AND BOUNDARY DELINEATION ONLY.
5. ALL FENCE MATERIAL SHALL BE BLACK VINYL COATED.
6. SEE **CHAIN LINK FENCE BLOW-UP DETAILS ON T07-07B.**

POST AND RAIL SPECIFICATIONS	
POST	PIPE NOM. SIZE (SCH. 40) I.D.
END, CORNER, OR PULL POST	2 1/2" DIAM.
LINE OR BRACE POST	2" DIAM.
TOP RAIL POST	1 1/4" DIAM.

REV NO.	DATE	BY	APPR
1	3/16	RAW	MHA
2	9/21	RAW	MHA

PUBLIC WORKS – STREETS AND TRANSPORTATION

APPROVED BY: M H Abdalla
ENGINEER MANAGER

APPROVED DATE: 9/1/2021

CITY OF Vancouver WASHINGTON

CHAIN LINK FENCE
TYPES 3 AN 4

STANDARD PLAN NUMBER
T07-07A

I:\CITYAPPS\AUTOCAD\STD_DETAILS\DRAWING_FILES\T07-07B

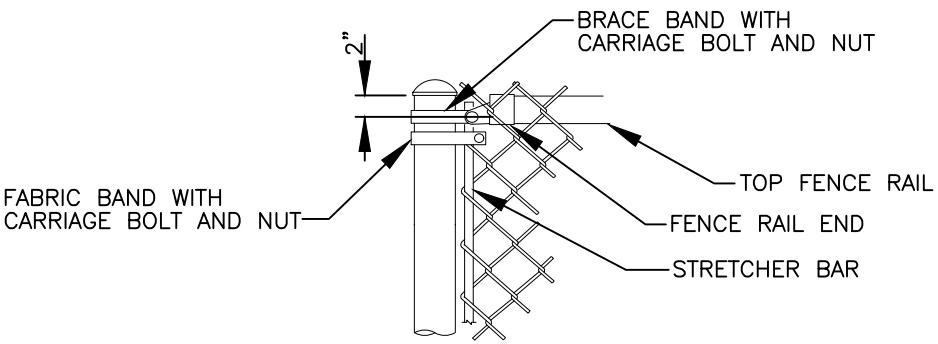

END OR CORNER POST DETAIL (A)

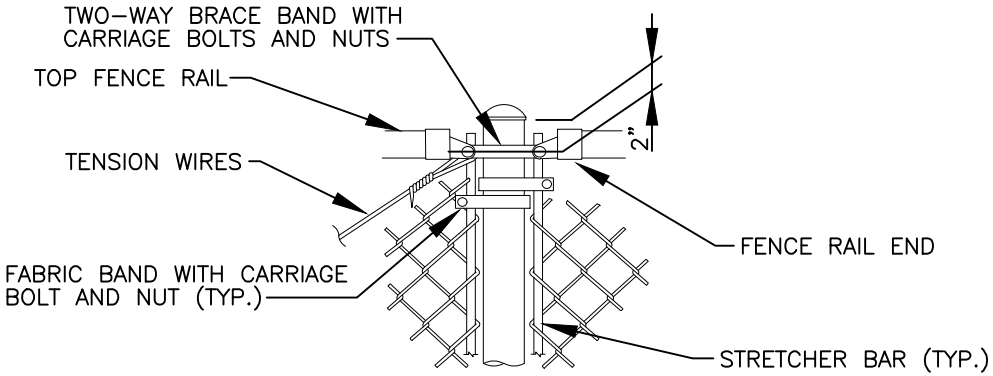

PULL POST (AT END OR CORNER) DETAIL (B)

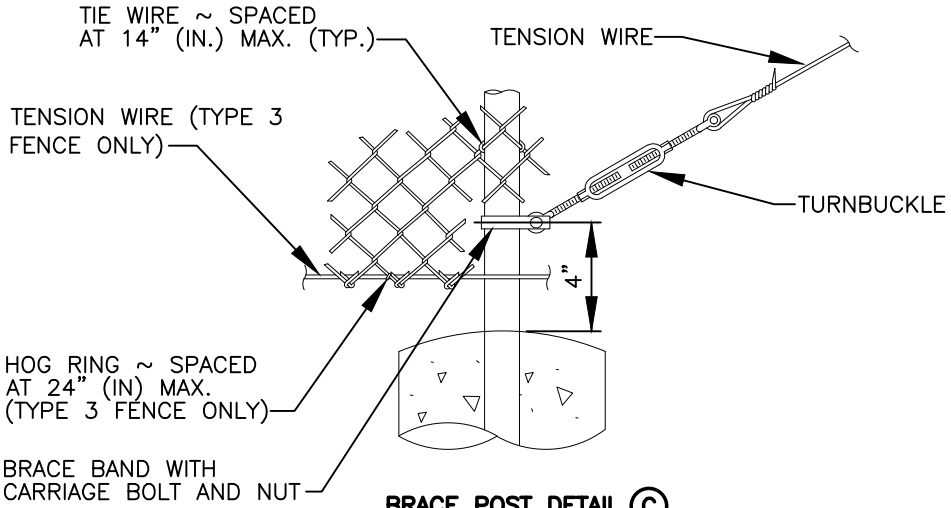

BRACE POST DETAIL (C)

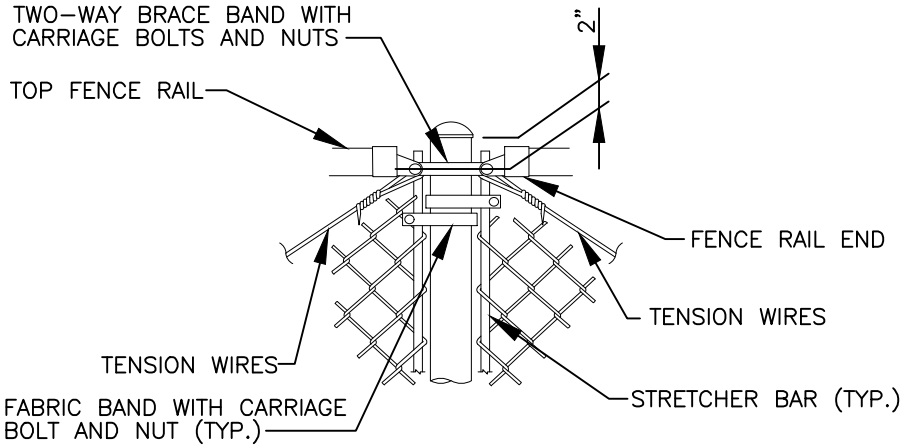

PULL POST (WITHIN RUN) DETAIL (D)

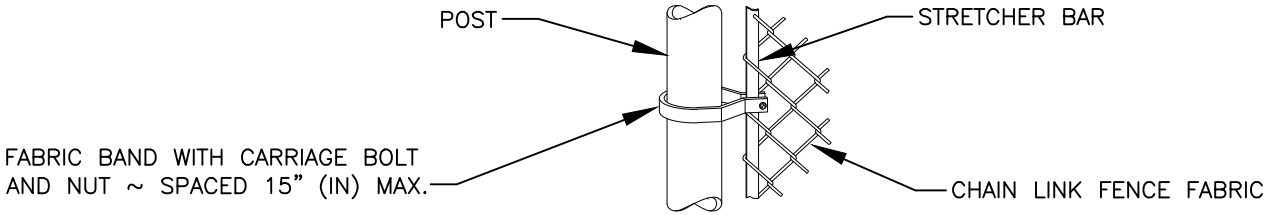

METHOD OF FASTENING STRETCHER BAR TO POST DETAIL (E)

REV NO.	DATE	BY	APPR
1	3/16	RAW	MHA
2	9/21	RAW	MHA

PUBLIC WORKS – STREETS AND TRANSPORTATION

APPROVED BY: M H Abdalla
ENGINEER MANAGER

APPROVED DATE: 9/1/2021

CITY OF Vancouver WASHINGTON

CHAIN LINK FENCE BLOW-UP DETAILS TYPES 3 AN 4

STANDARD PLAN NUMBER

T07-07B

I:\CITYAPPS\AUTOCAD\STD_DETAILS\DRAWING_FILES\T07-08A

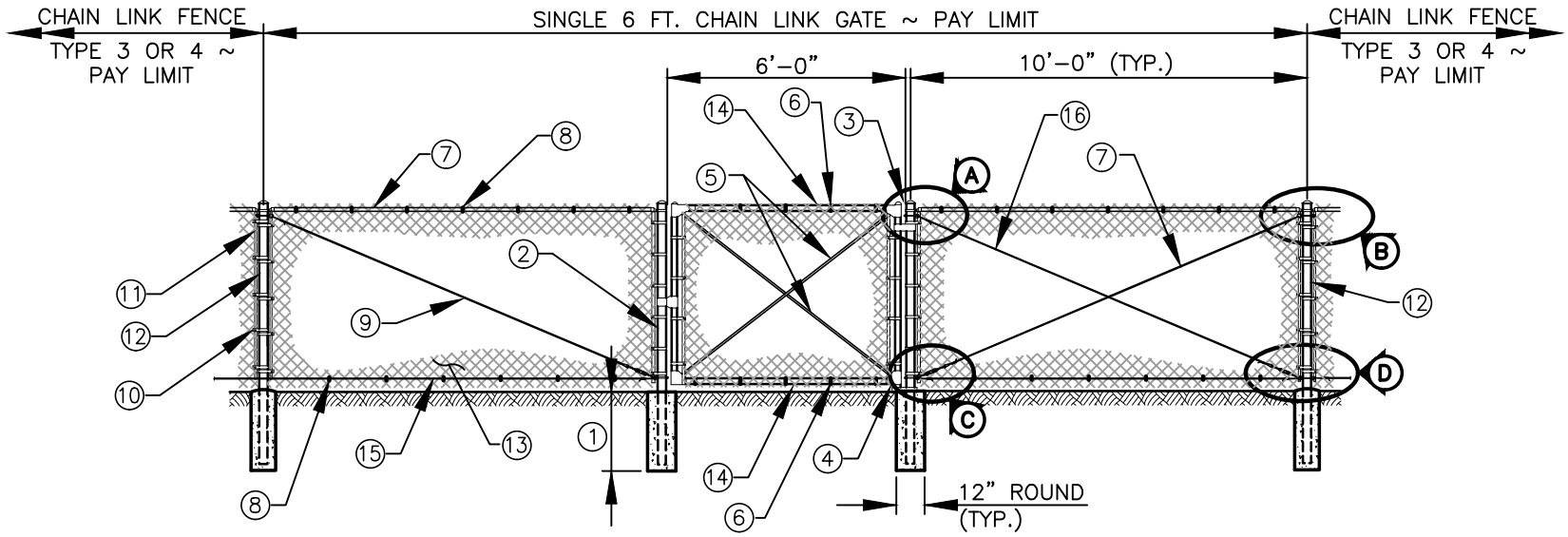

1. CONCRETE POST BASE DEPTH (TYP.):
   TYPE 3 FENCE = 3'-0"
   TYPE 4 FENCE = 2'-0"
2. GATE POST (TYP.) ~ 3 1/2" (IN.) DIAM. (NOM. SCH. 40)
3. TOP HINGE ~ 90° SWING (TYP.)
4. BOTTOM HINGE ~ 90° SWING (TYP.)
5. TRUSS ROD (TYP.)
6. TIE WIRES (TYP.) ~ SPACED AT 14" (IN.) MAX.
7. TOP RAIL (TYP.)
8. HOG RINGS ~ SPACED AT 24" (IN.) MAX. (TYP.)
9. TENSION WIRES (TYP.)
10. FABRIC BAND (TYP.)
11. STRETCHER BAR (TYP.)
12. PULL POST
13. CHAIN LINK FENCE FABRIC (TYP.)
14. MATCH FENCE SELVAGE (TYP.)
15. TENSION WIRE ALONG BOTTOM OF FENCE (TYPE 3 FENCE ONLY) (TYP.)
16. TENSION WIRE FOR GATE POST ~ REQUIRED ONLY ON HINGE SIDE

NOTES:

1. MATERIALS SHALL MEET THE REQUIREMENTS OF THE STANDARD SPECIFICATIONS 9-16.
2. ALL FENCE MATERIAL SHALL BE BLACK VINYL COATED.

REV NO.	DATE	BY	APPR
1	3/16	RAW	MHA
2	9/21	RAW	MHA

PUBLIC WORKS – STREETS AND TRANSPORTATION

APPROVED BY: M H Abdalla
ENGINEER MANAGER

APPROVED DATE: 9/1/2021

CITY OF Vancouver WASHINGTON

CHAIN LINK SINGLE GATE TYPES 3 AND 4

STANDARD PLAN NUMBER

T07-08A

I:\CITYAPPS\AUTOCAD\STD_DETAILS\DRAWING_FILES\T07-08B

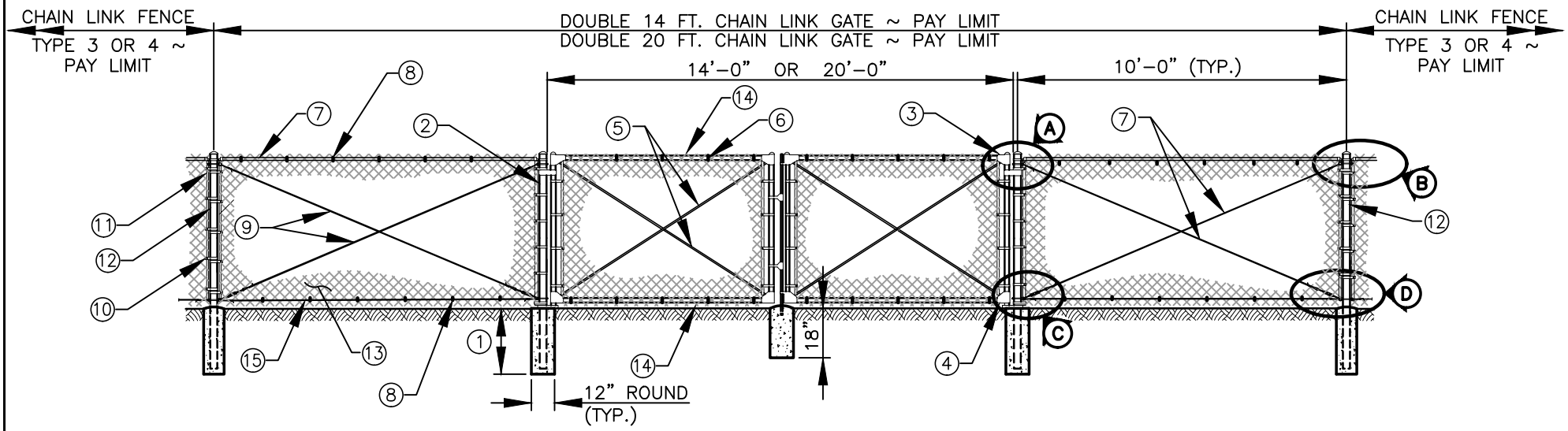

1. CONCRETE POST BASE DEPTH (TYP.):
   TYPE 3 FENCE = 3'-0"
   TYPE 4 FENCE = 2'-0"
2. GATE POST (TYP.) ~ 3 1/2" (IN.) DIAM. (NOM. SCH. 40)
3. TOP HINGE ~ 180° SWING (TYP.)
4. BOTTOM HINGE ~ 180° SWING (TYP.)
5. TRUSS ROD (TYP.)
6. TIE WIRES (TYP.) ~ SPACED AT 14" (IN.) MAX.
7. TOP RAIL (TYP.)
8. HOG RINGS ~ SPACED AT 24" (IN.) MAX. (TYP.)
9. TENSION WIRES (TYP.)
10. FABRIC BAND (TYP.)
11. STRETCHER BAR (TYP.)
12. PULL POST
13. CHAIN LINK FENCE FABRIC (TYP.)
14. MATCH FENCE SELVAGE (TYP.)
15. TENSION WIRE ALONG BOTTOM OF FENCE (TYPE 3 FENCE ONLY) (TYP.)

NOTES:

1. MATERIALS SHALL MEET THE REQUIREMENTS OF THE STANDARD SPECIFICATIONS 9-16.
2. ALL FENCE MATERIAL SHALL BE BLACK VINYL COATED.
3. SEE **CHAIN LINK GATE BLOW-UP DETAILS ON SHEET T07-08C.**

REV NO.	DATE	BY	APPR
1	3/16	RAW	MHA
2	9/21	RAW	MHA

PUBLIC WORKS - STREETS AND TRANSPORTATION

APPROVED BY: M H Abdalla
ENGINEER MANAGER

APPROVED DATE: 9/1/2021

CITY OF Vancouver WASHINGTON

CHAIN LINK DOUBLE GATE
TYPES 3 AND 4

STANDARD PLAN NUMBER
T07-08B

I:\CITYAPPS\AUTOCAD\STD_DETAILS\DRAWING_FILES\T07-08C

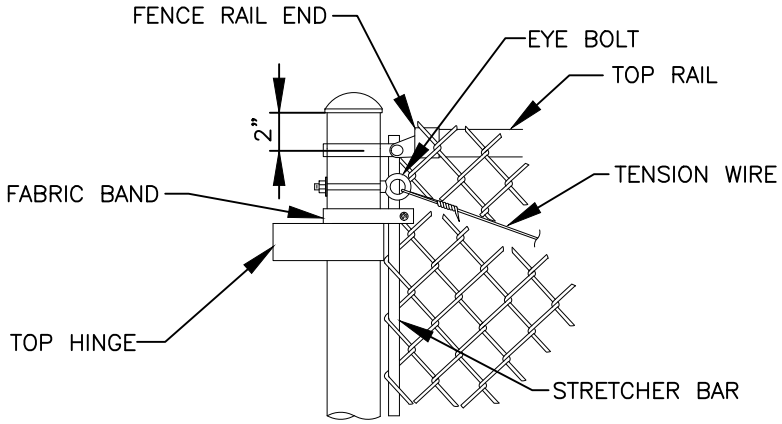

GATE POST DETAIL (A)

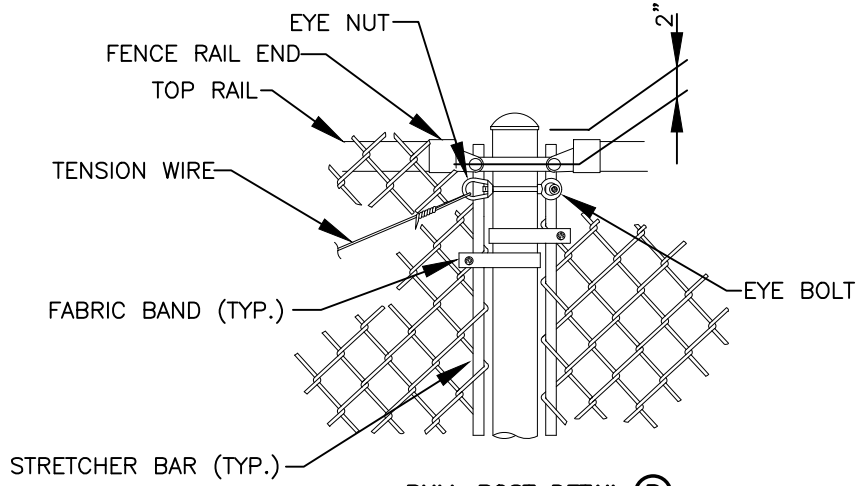

PULL POST DETAIL (B)

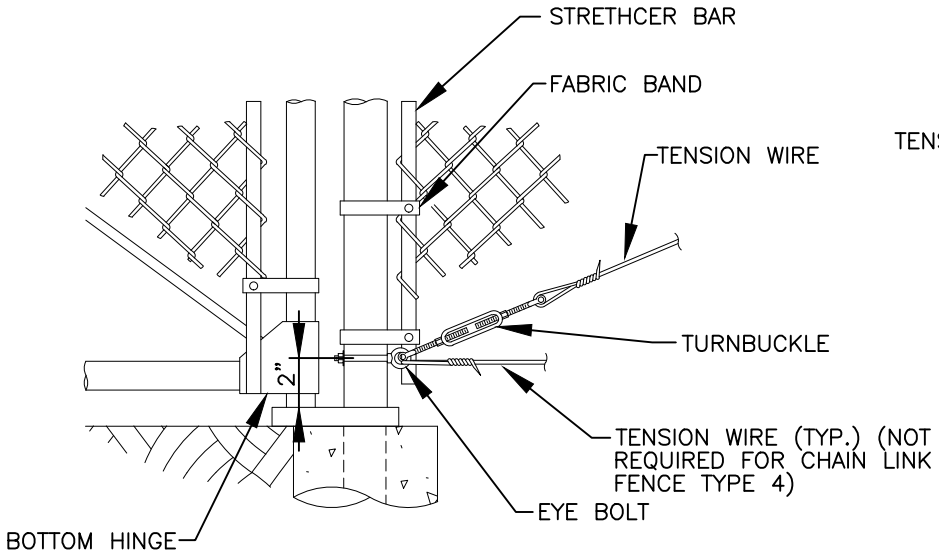

GATE POST DETAIL (C)

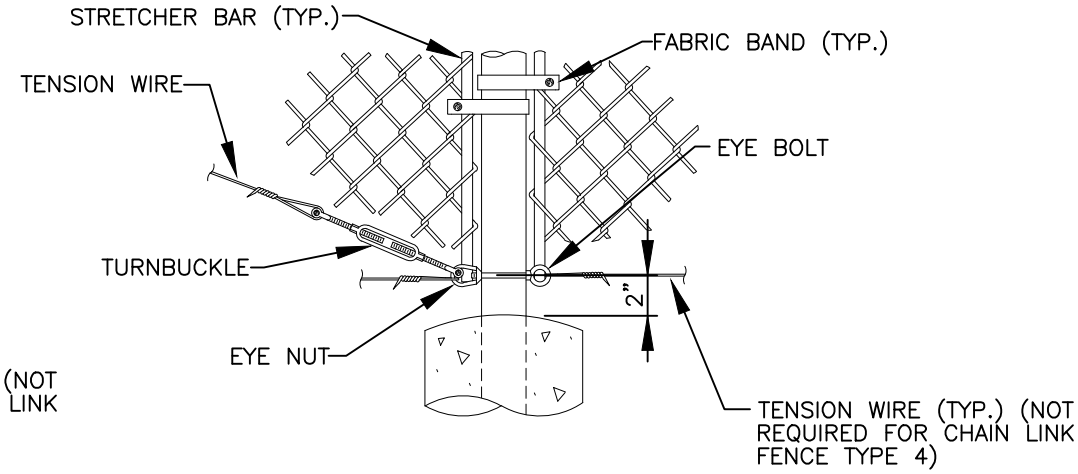

PULL POST DETAIL (D)

REV NO.	DATE	BY	APPR
1	3/16	RAW	MHA
2	9/21	RAW	MHA

PUBLIC WORKS – STREETS AND TRANSPORTATION

APPROVED BY: M H Abdalla
ENGINEER MANAGER

APPROVED DATE: 9/1/2021

CITY OF Vancouver WASHINGTON

CHAIN LINK GATE BLOW-UP DETAILS TYPES 3 AND 4

STANDARD PLAN NUMBER

T07-08C

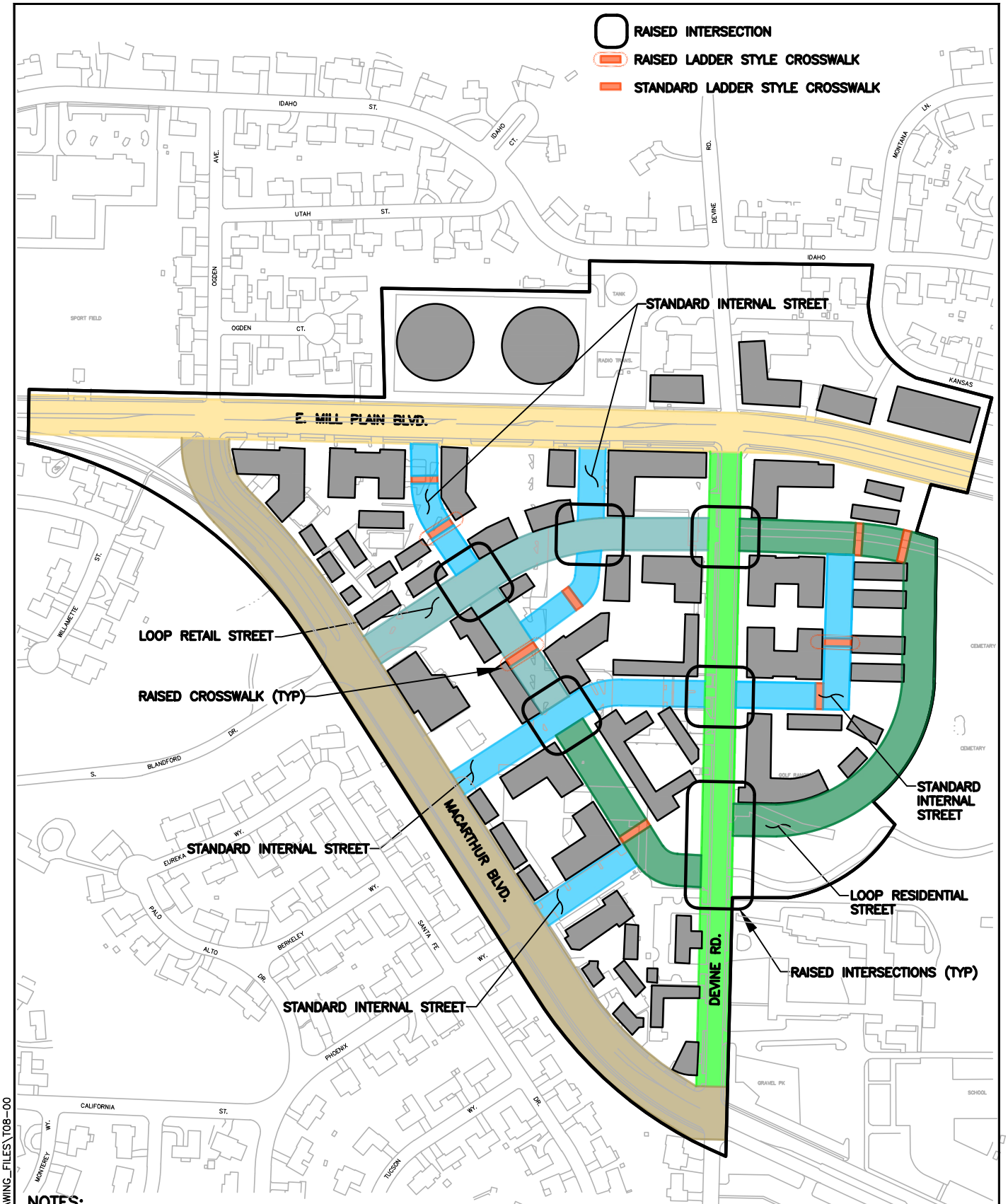

NOTES:

1. ALL INTERSECTIONS TO HAVE CURB BULB-OUTS.
2. ALL STREETS TO HAVE SPEED TABLES PER DETAIL **T02-26A**, BASED ON BEST PRACTICES TO ACHIEVE A MAX. SPEED OF 20MPH.

REV NO.	DATE	BY	APPR
1	9/21	RAW	MHA

PUBLIC WORKS – STREETS AND TRANSPORTATION

APPROVED BY: M H Abdalla
ENGINEER MANAGER
APPROVED DATE: 9/1/2021

CITY OF Vancouver WASHINGTON

HEIGHTS DISTRICT REDEVELOPMENT KEP MAP

STANDARD PLAN NUMBER

T08-00

I:\CITYAPPS\AUTOCAD\STD_DETAILS\DRAWING_FILES\T08-00

I:\CITYAPPS\AUTOCAD\STD_DETAILS\DRAWING_FILES\T08-01

REV NO.	DATE	BY	APPR
1	9/21	RAW	MHA

PUBLIC WORKS – STREETS AND TRANSPORTATION

APPROVED BY: ENGINEER MANAGER

APPROVED DATE: 9/1/2021

CITY OF Vancouver WASHINGTON

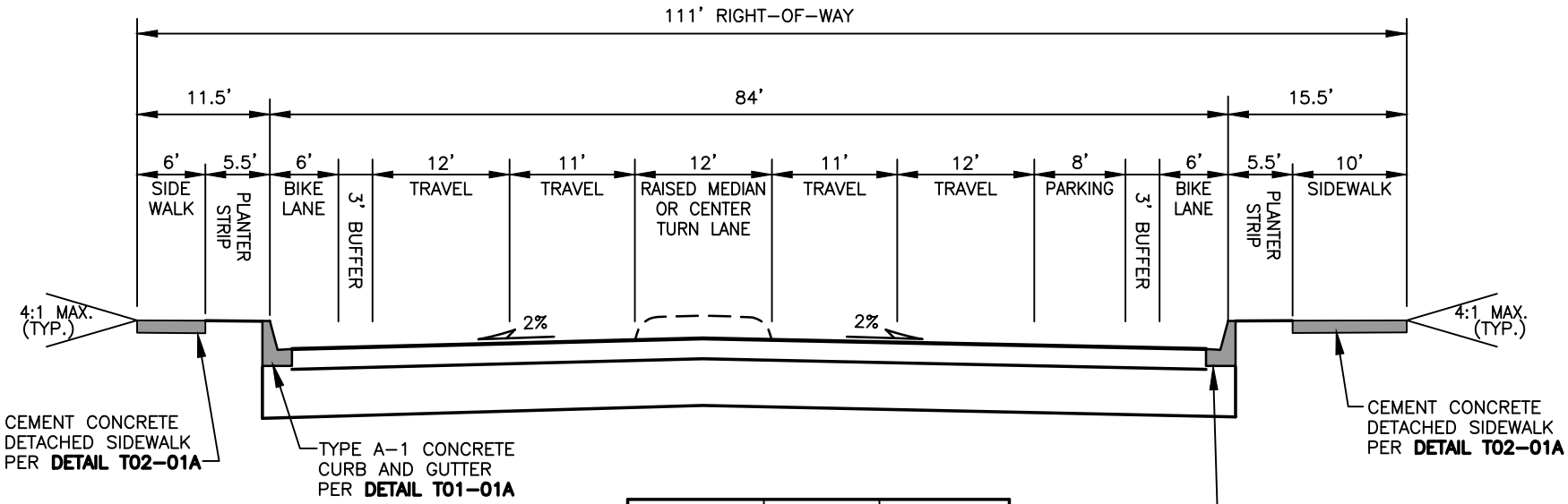

AASHTO SOIL TYPE	ASPHALT THICKNESS	BASE ROCK THICKNESS
A-1 TO A-5	0.75'	0.85'
A-6	0.80'	1.25'
A-7	NO SECTION ESTIMATED	
OTHER	NO SECTION ESTIMATED	

NOTES:

1. SEE STANDARD PLAN **T10-00** FOR GENERAL NOTES.
2. WIDER SIDEWALKS MAY BE REQUIRED UNDER SPECIAL CIRCUMSTANCES.
3. ADDITIONAL TRAFFIC CALMING MAY BE REQUIRED. COORDINATE WITH THE CITY.
4. ALTERNATIVE BIKE LANE MAY BE REQUIRED ADJACENT TO MILL PLAIN VINE STATION AREA (BIKES BEHIND STATION, NOT ON ROADWAY). COORDINATE WITH THE CITY AND C-TRAN.
5. ALL ARTERIAL STREETS REQUIRE STREET LIGHTING, SEE STANDARD PLAN **T08-31**.
6. STORMWATER MANAGEMENT TO BE INCORPORATED. COORDINATE WITH THE CITY.
7. SEE STANDARD PLAN **T02-18** FOR MEDIAN CONSTRUCTION.
8. ADDITIONAL PROTECTION IN BIKE LANE BUFFERS MAY BE REQUIRED. COORDINATE WITH CITY.

HEIGHTS DISTRICT REDEVELOPMENT
MILL PLAIN BOULEVARD

STANDARD PLAN NUMBER
T08-01

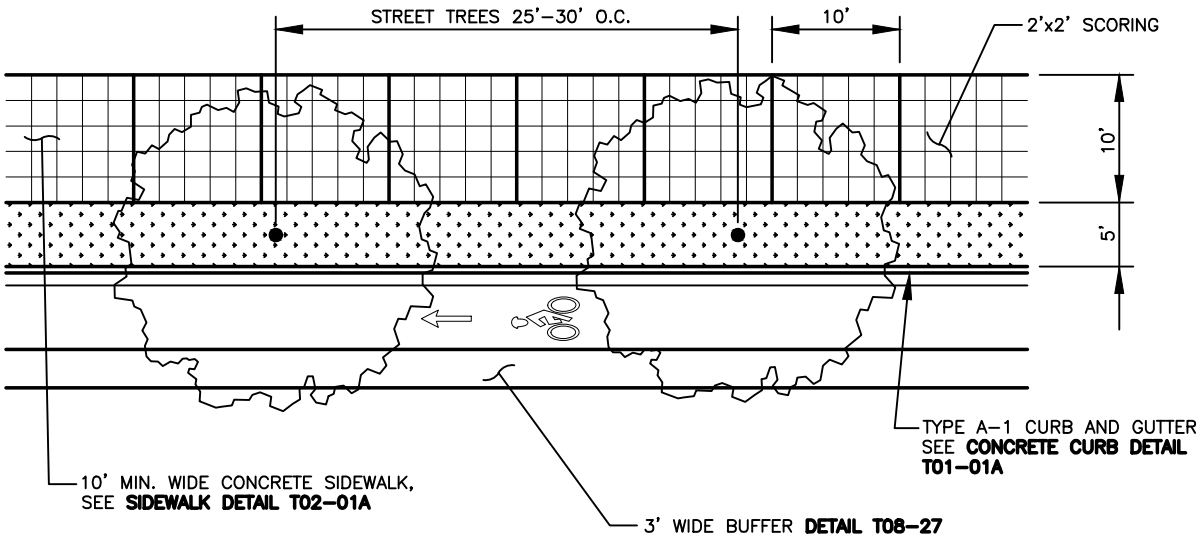

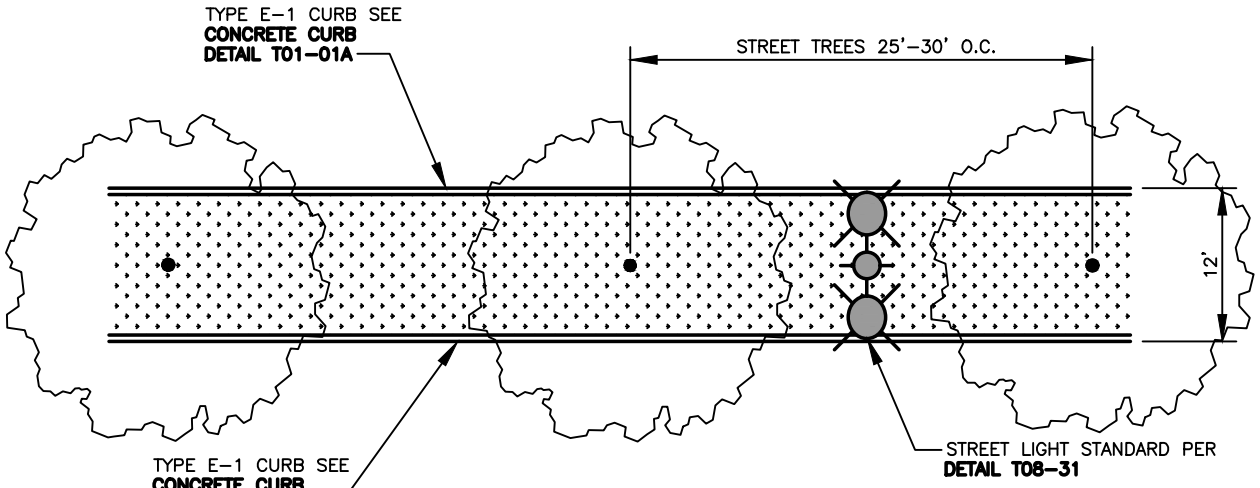

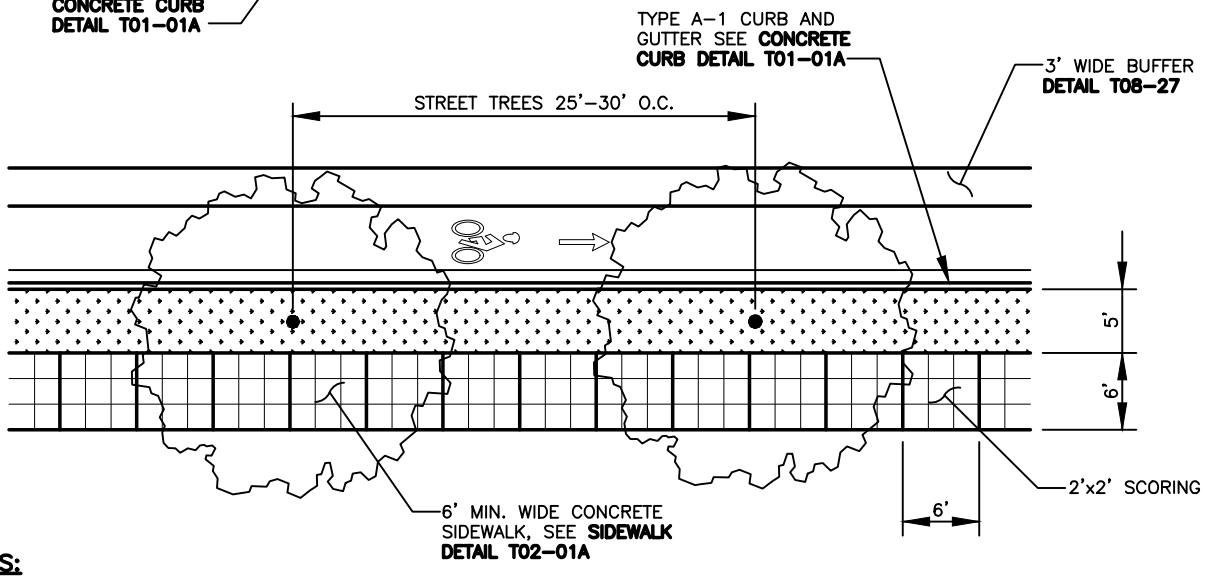

NOTES:

1. FINISH SHALL BE LIGHT BROOM PERPENDICULAR TO PEDESTRIAN TRAFFIC UNLESS OTHERWISE NOTED.
2. SIDEWALK PATTERN APPLIES TO HEIGHTS REDEVELOPMENT DESIGN AREA.
3. SCORE LINES SHALL BE CRISP AND WITHOUT SHINERS.

REV NO.	DATE	BY	APPR
1	9/21	RAW	MHA

PUBLIC WORKS – STREETS AND TRANSPORTATION

APPROVED BY: M H Abdalla
ENGINEER MANAGER
APPROVED DATE: 9/1/2021

CITY OF Vancouver WASHINGTON

HEIGHTS DISTRICT REDEVELOPMENT
MILL PLAIN BOULEVARD OVERVIEW

STANDARD PLAN NUMBER
T08–02

I:\CITYAPPS\AUTOCAD\STD_DETAILS\DRAWING_FILES\T08–02

I:\CITYAPPS\AUTOCAD\STD_DETAILS\DRAWING_FILES\T08-03

REV NO.	DATE	BY	APPR
1	9/21	RAW	MHA

PUBLIC WORKS – STREETS AND TRANSPORTATION

APPROVED BY: ENGINEER MANAGER

APPROVED DATE: 9/1/2021

CITY OF Vancouver WASHINGTON

HEIGHTS DISTRICT REDEVELOPMENT MACARTHUR BOULEVARD

STANDARD PLAN NUMBER T08-03

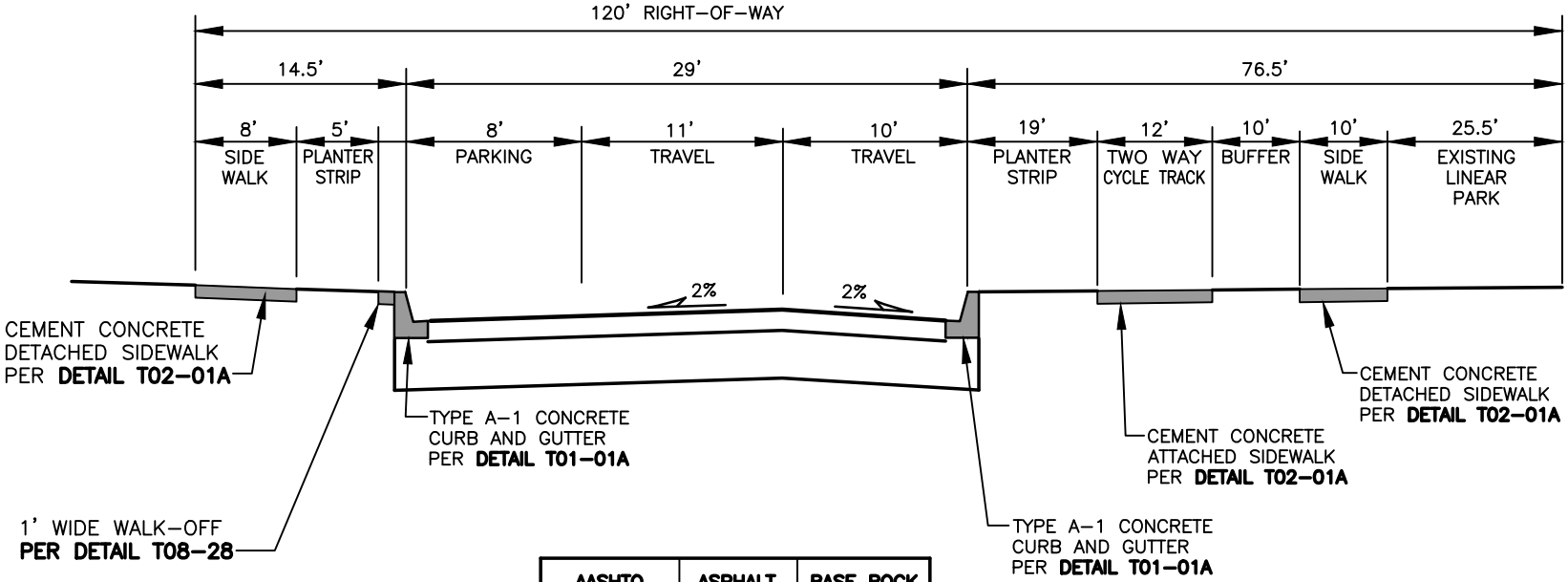

AASHTO SOIL TYPE	ASPHALT THICKNESS	BASE ROCK THICKNESS
A-1 TO A-5	0.60'	0.65'
A-6	0.60'	1.25'
A-7	NO SECTION ESTIMATED	
OTHER	NO SECTION ESTIMATED	

NOTES:

1. SEE STANDARD PLAN T10-00 FOR GENERAL NOTES.
2. WIDER SIDEWALKS MAY BE REQUIRED UNDER SPECIAL CIRCUMSTANCES.
3. ADDITIONAL TRAFFIC CALMING MAY BE REQUIRED. COORDINATE WITH THE CITY.
4. STORMWATER MANAGEMENT TO BE INCORPORATED. COORDINATE WITH THE CITY.
5. ALL ARTERIAL STREETS REQUIRE STREET LIGHTING, SEE STANDARD PLAN **T08-31**.

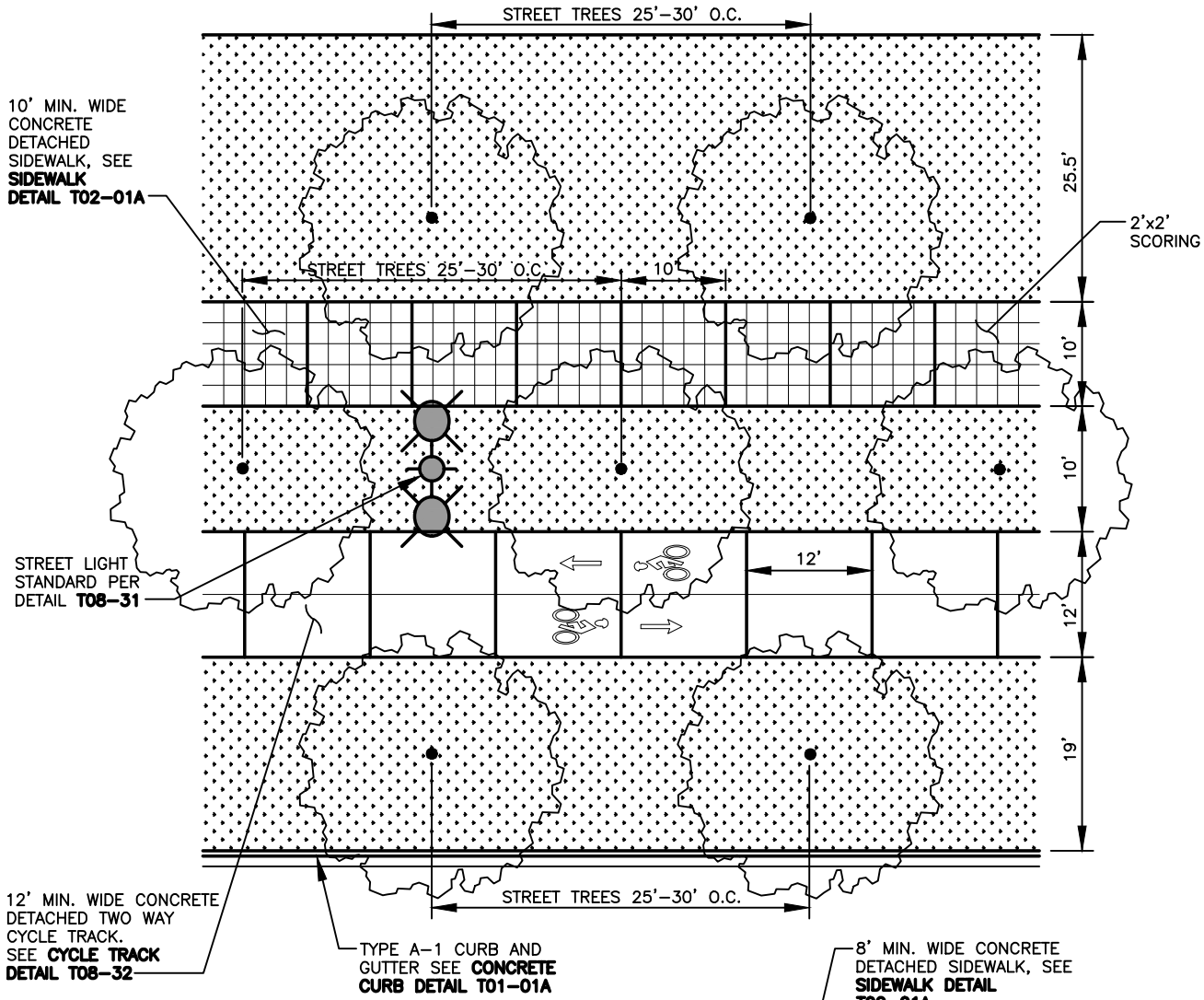

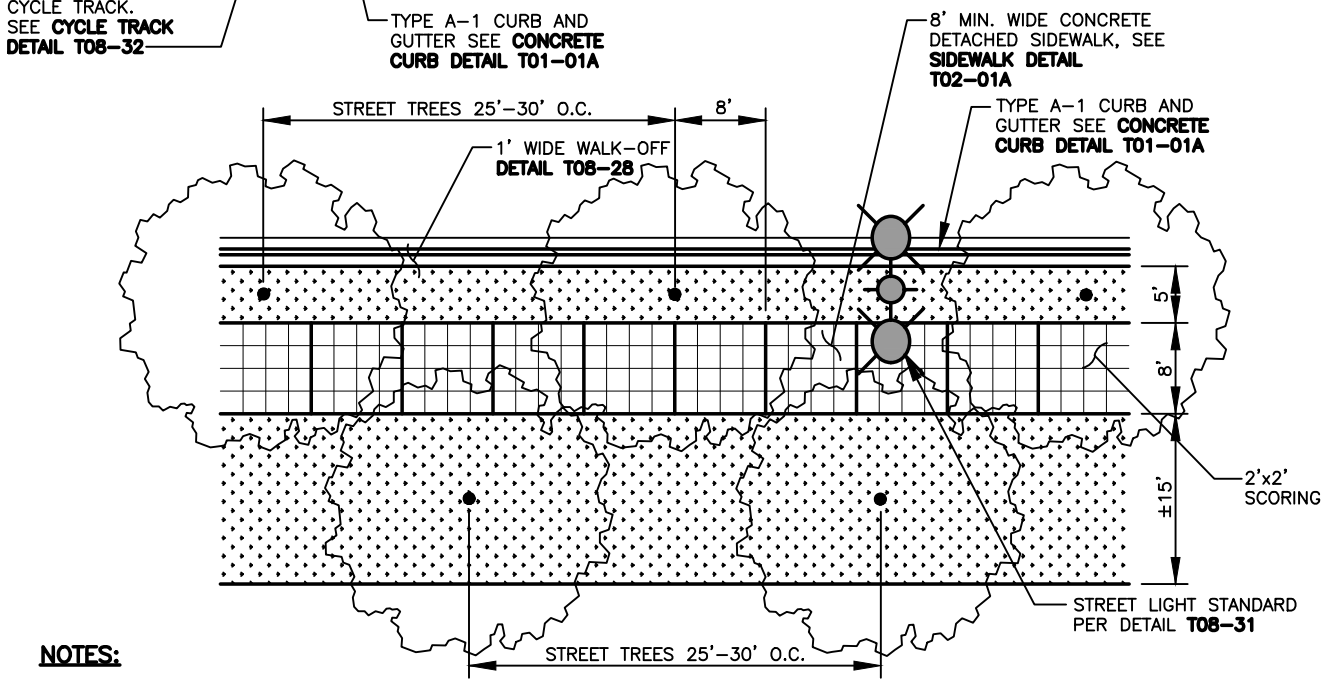

NOTES:

1. FINISH SHALL BE LIGHT BROOM PERPENDICULAR TO PEDESTRIAN TRAFFIC UNLESS OTHERWISE NOTED.
2. SIDEWALK PATTERN APPLIES TO HEIGHTS REDEVELOPMENT DESIGN AREA.
3. SCORE LINES SHALL BE CRISP AND WITHOUT SHINERS.

REV NO.	DATE	BY	APPR
1	9/21	RAW	MHA

PUBLIC WORKS – STREETS AND TRANSPORTATION

APPROVED BY: M H Abdalla
ENGINEER MANAGER
APPROVED DATE: 9/1/2021

CITY OF Vancouver WASHINGTON

HEIGHTS DISTRICT REDEVELOPMENT
MACARTHUR BOULEVARD OVERVIEW

STANDARD PLAN NUMBER
T08–04

I:\CITYAPPS\AUTOCAD\STD_DETAILS\DRAWING_FILES\T08–04

I:\CITYAPPS\AUTOCAD\STD_DETAILS\DRAWING_FILES\T08-05

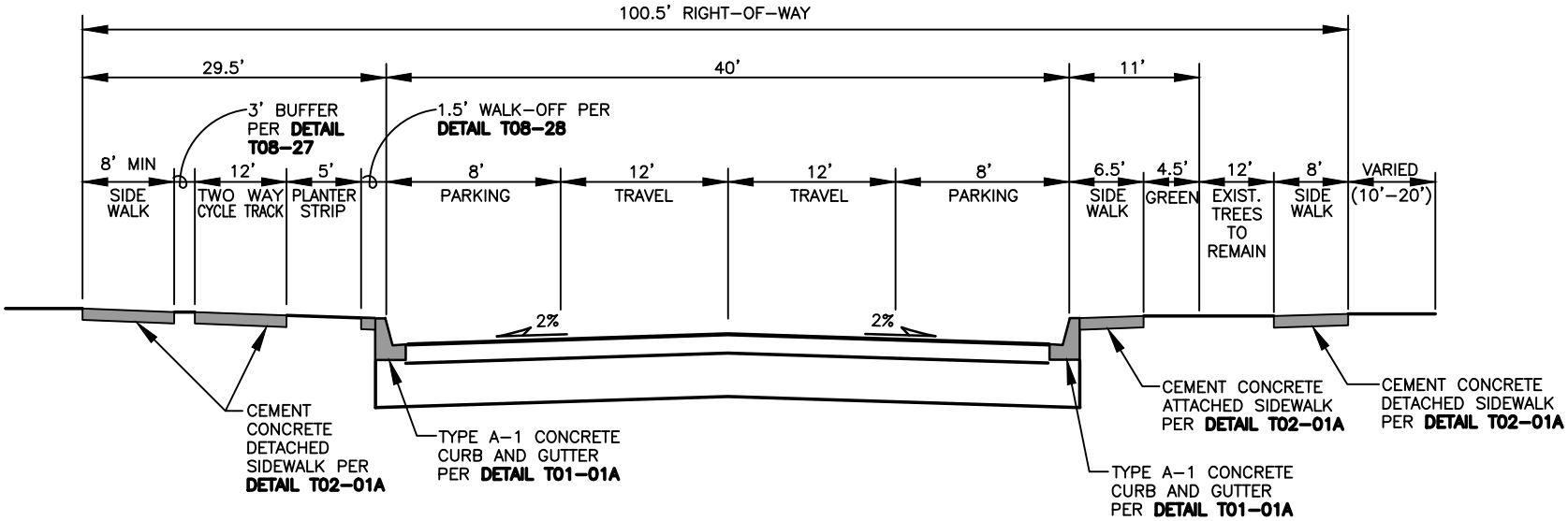

AASHTO SOIL TYPE	ASPHALT THICKNESS	BASE ROCK THICKNESS
A-1 TO A-5	0.60'	0.65'
A-6	0.60'	1.25'
A-7	NO SECTION	ESTIMATED
OTHER	NO SECTION	ESTIMATED

NOTES:

1. SEE STANDARD PLAN T10-00 FOR GENERAL NOTES.
2. WIDER SIDEWALKS MAY BE REQUIRED UNDER SPECIAL CIRCUMSTANCES.
3. ADDITIONAL TRAFFIC CALMING MAY BE REQUIRED. COORDINATE WITH THE CITY.
4. STORMWATER MANAGEMENT TO BE INCORPORATED. COORDINATE WITH THE CITY.
5. ALL ARTERIAL STREETS REQUIRE STREET LIGHTING, SEE STANDARD PLAN **T08-31**.

REV NO.	DATE	BY	APPR
1	9/21	RAW	MHA

PUBLIC WORKS – STREETS AND TRANSPORTATION

APPROVED BY: ENGINEER / MANAGER

APPROVED DATE: 9/1/2021

CITY OF Vancouver WASHINGTON

HEIGHTS DISTRICT REDEVELOPMENT DEVINE ROAD

STANDARD PLAN NUMBER T08-05

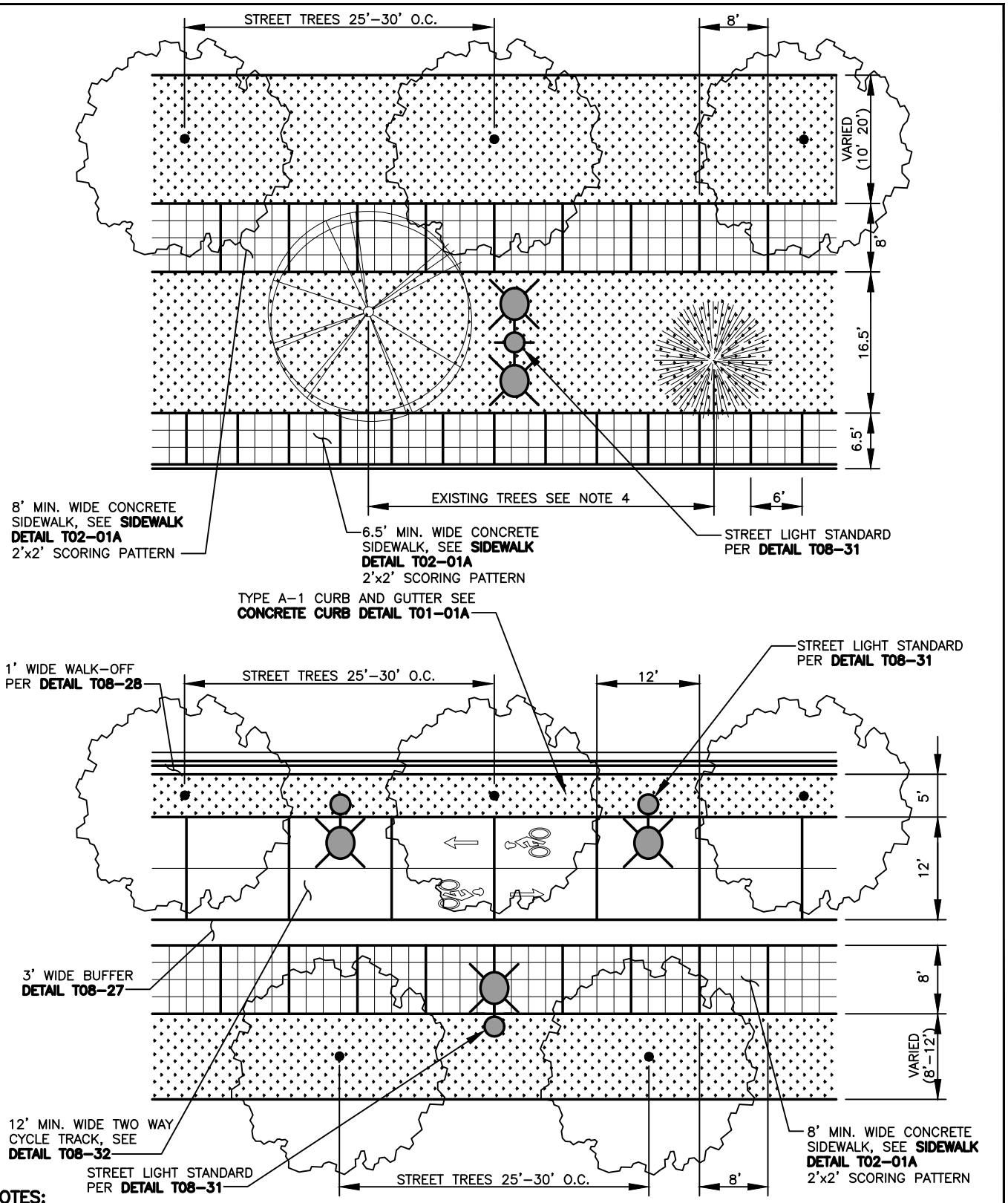

NOTES:

1. FINISH SHALL BE LIGHT BROOM PERPENDICULAR TO PEDESTRIAN TRAFFIC UNLESS OTHERWISE NOTED.
2. SIDEWALK PATTERN APPLIES TO HEIGHTS REDEVELOPMENT DESIGN AREA.
3. SCORE LINES SHALL BE CRISP AND WITHOUT SHINERS.
4. CONSULT CITY FORESTER WHEN CONSTRUCTION IS WITHIN CRITICAL ROOT ZONE OF EXISTING TREES.
5. CONNECTION BETWEEN SIDEWALK TO FACILITATE PEDESTRIAN CIRCULATION REQUIRED. COORDINATE WITH CITY.

REV NO.	DATE	BY	APPR
1	9/21	RAW	MHA

PUBLIC WORKS – STREETS AND TRANSPORTATION

APPROVED BY: M H Abdalla
ENGINEER MANAGER
APPROVED DATE: 9/1/2021

CITY OF Vancouver WASHINGTON

HEIGHTS DISTRICT REDEVELOPMENT DEVINE ROAD OVERVIEW

STANDARD PLAN NUMBER
T08–06

I:\CITYAPPS\AUTOCAD\STD_DETAILS\DRAWING_FILES\T08–06

I:\CITYAPPS\AUTOCAD\STD_DETAILS\DRAWING_FILES\T08-07

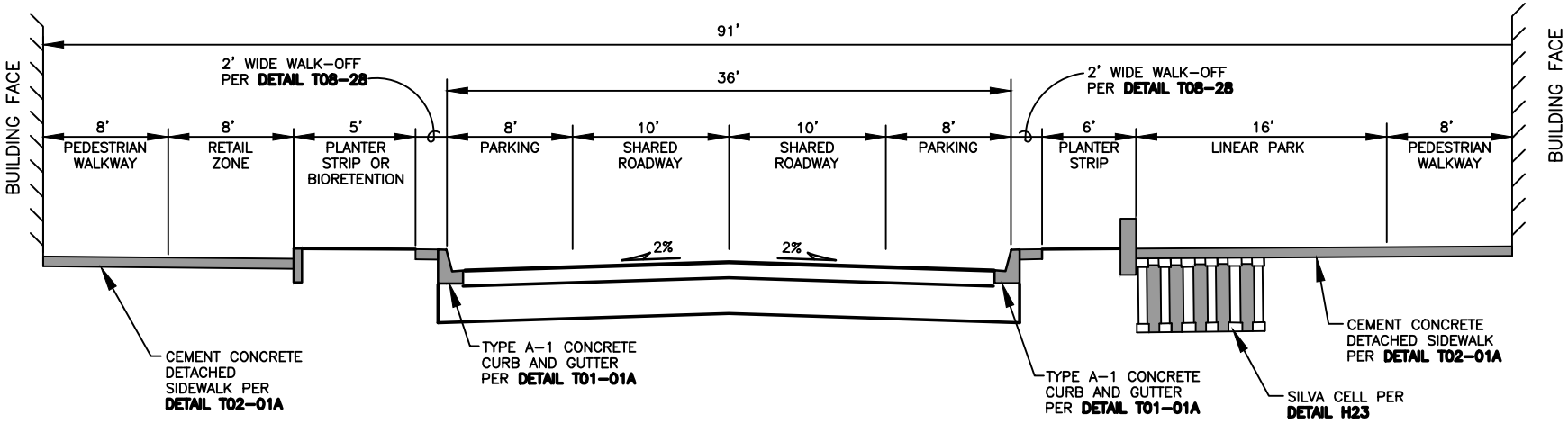

AASHTO SOIL TYPE	ASPHALT THICKNESS	BASE ROCK THICKNESS
A-1 TO A-5	0.40'	0.85'
A-6	0.45'	1.00'
A-7	NO SECTION ESTIMATED	
OTHER	NO SECTION ESTIMATED	

NOTES:

1. SEE STANDARD PLAN **T10-00** FOR GENERAL NOTES.
2. WIDER SIDEWALKS MAY BE REQUIRED UNDER SPECIAL CIRCUMSTANCES.
3. ADDITIONAL TRAFFIC CALMING MAY BE REQUIRED. COORDINATE WITH THE CITY.
4. BICYCLE STENCIL PAVEMENT MARKING IS REQUIRED FOR ALL SHARED ROADWAY SEGMENTS. SEE STANDARD PLAN **T29-61**.
5. CENTER LINE STRIPING SHOULD NOT BE USED.
6. STORMWATER MANAGEMENT TO BE INCORPORATED. COORDINATE WITH THE CITY.
7. ALL NEIGHBORHOOD CIRCULATORS REQUIRE STREET LIGHTING, SEE STANDARD PLAN **T08-31**.

REV NO.	DATE	BY	APPR
1	9/21	RAW	MHA

PUBLIC WORKS – STREETS AND TRANSPORTATION

APPROVED BY: ENGINEER MANAGER
APPROVED DATE: 9/1/2021

CITY OF Vancouver WASHINGTON

HEIGHTS DISTRICT REDEVELOPMENT LOOP RETAIL STREET

STANDARD PLAN NUMBER
T08-07

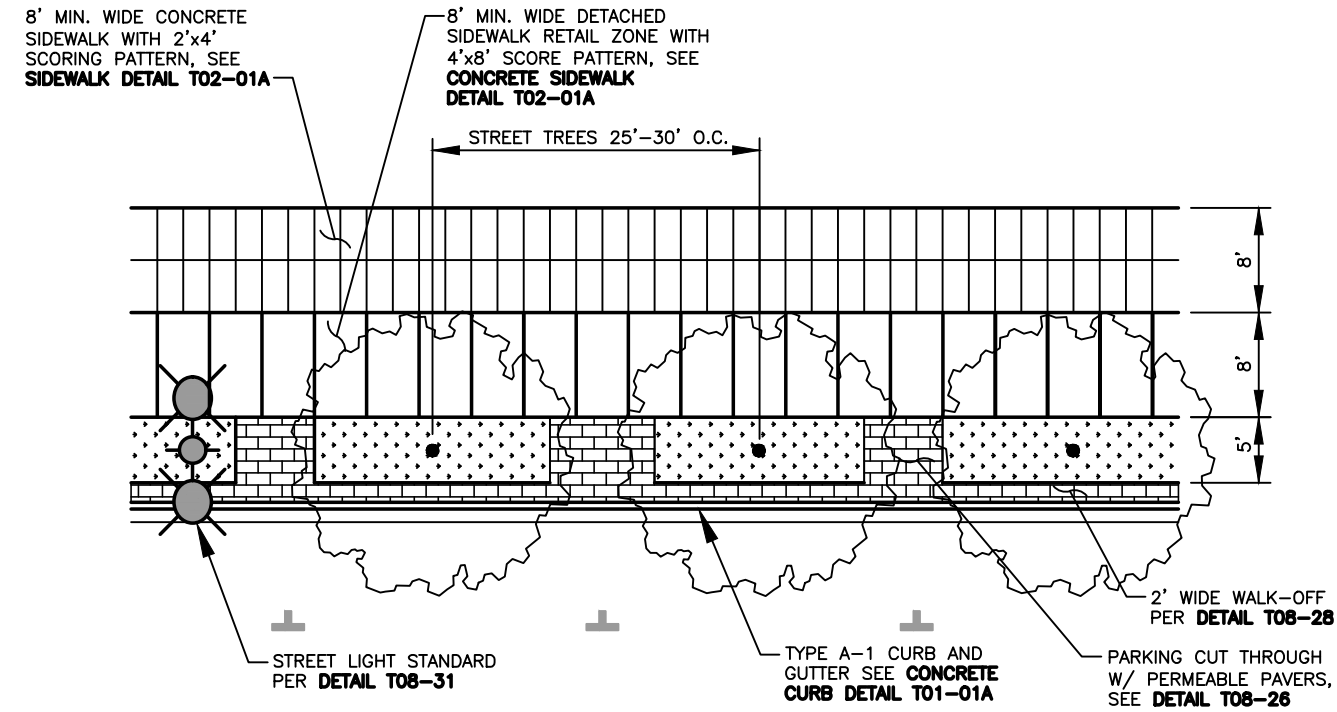

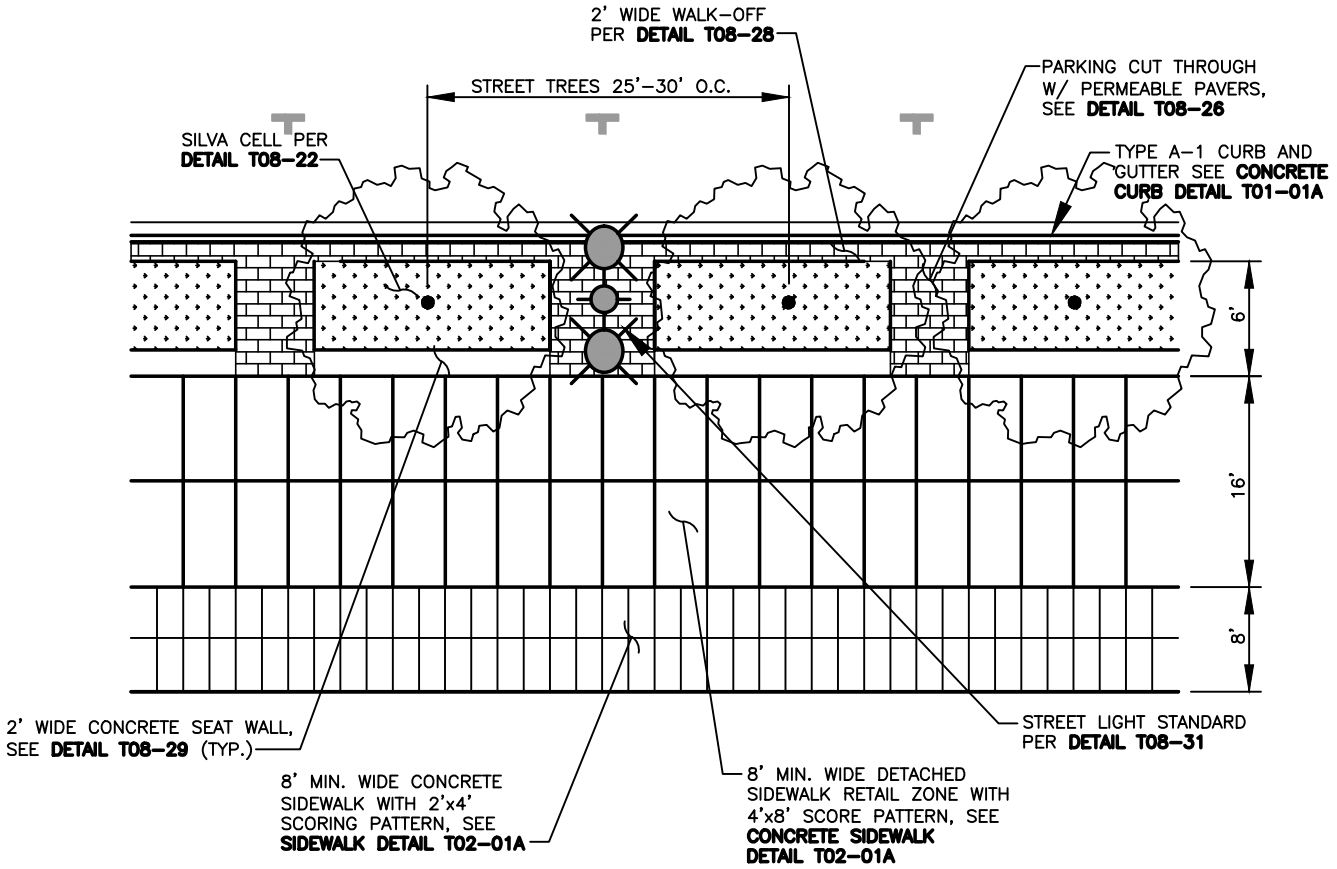

NOTES:

1. FINISH SHALL BE LIGHT BROOM PERPENDICULAR TO PEDESTRIAN TRAFFIC UNLESS OTHERWISE NOTED.
2. SIDEWALK PATTERN APPLIES TO HEIGHTS REDEVELOPMENT DESIGN AREA.
3. SCORE LINES SHALL BE CRISP AND WITHOUT SHINERS.

REV NO.	DATE	BY	APPR
1	9/21	RAW	MHA

PUBLIC WORKS – STREETS AND TRANSPORTATION

APPROVED BY: M H Abdalla
ENGINEER MANAGER
APPROVED DATE: 9/1/2021

CITY OF Vancouver WASHINGTON

HEIGHTS DISTRICT REDEVELOPMENT
LOOP RETAIL STREET OVERVIEW

STANDARD PLAN NUMBER
T08–08

I:\CITYAPPS\AUTOCAD\STD_DETAILS\DRAWING_FILES\T08–08

I:\CITYAPPS\AUTOCAD\STD_DETAILS\DRAWING_FILES\T08-09

REV NO.	DATE	BY	APPR
1	9/21	RAW	MHA

PUBLIC WORKS – STREETS AND TRANSPORTATION

APPROVED BY: ENGINEER MANAGER

APPROVED DATE: 9/1/2021

CITY OF Vancouver WASHINGTON

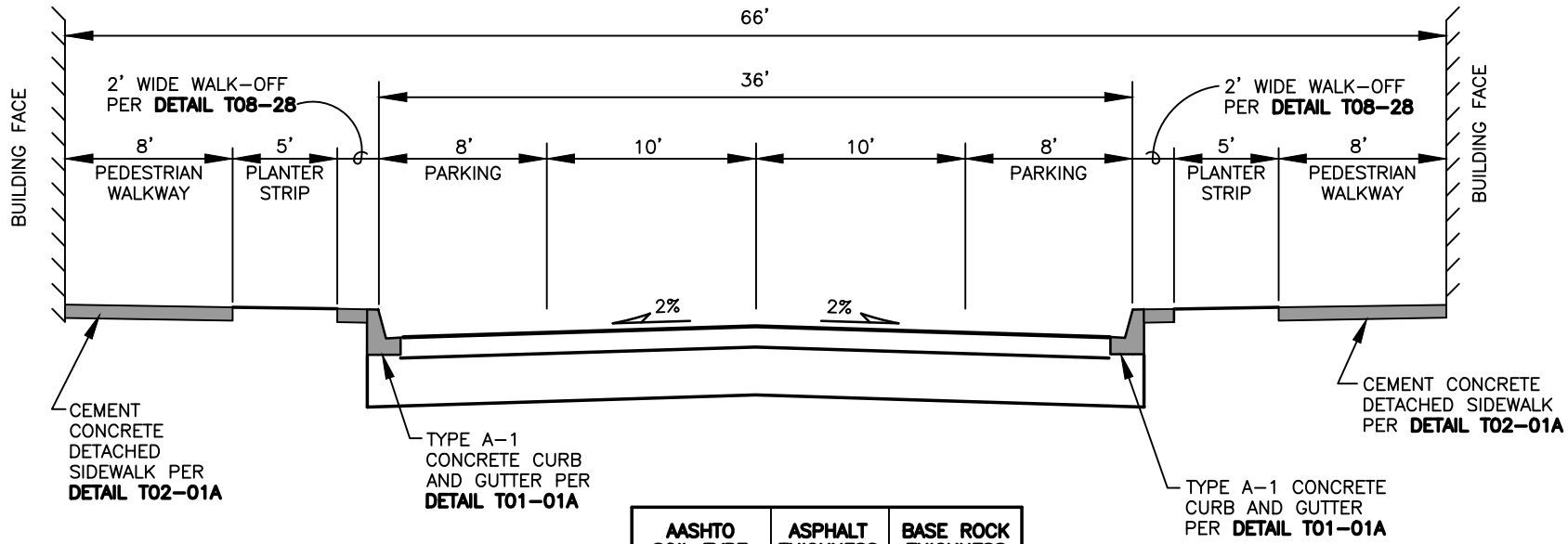

AASHTO SOIL TYPE	ASPHALT THICKNESS	BASE ROCK THICKNESS
A-1 TO A-5	0.40'	0.85'
A-6	0.45'	1.00'
A-7	NO SECTION	ESTIMATED
OTHER	NO SECTION	ESTIMATED

NOTES:

1. SEE STANDARD PLAN **T10-00** FOR GENERAL NOTES.
2. WIDER SIDEWALKS MAY BE REQUIRED UNDER SPECIAL CIRCUMSTANCES.
3. ADDITIONAL TRAFFIC CALMING MAY BE REQUIRED. COORDINATE WITH THE CITY.
4. BICYCLE STENCIL PAVEMENT MARKING IS (SHARROW) REQUIRED FOR ALL SHARED ROADWAY SEGMENTS. SEE STANDARD PLAN **T29-61**.
5. CENTER LINE STRIPING SHOULD NOT BE USED.
6. STORMWATER MANAGEMENT TO BE INCORPORATED. COORDINATE WITH THE CITY.
3. ALL NEIGHBORHOOD CIRCULATORS REQUIRE STREET LIGHTING, SEE STANDARD PLAN **T08-31**.

HEIGHTS DISTRICT REDEVELOPMENT STANDARD STREET

STANDARD PLAN NUMBER

T08-09

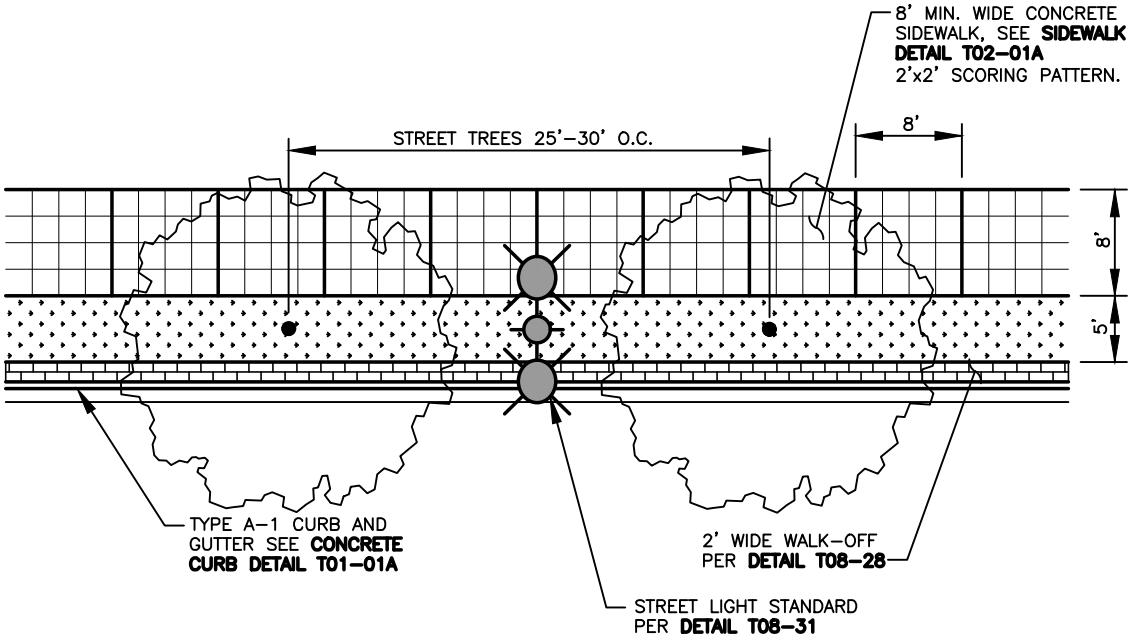

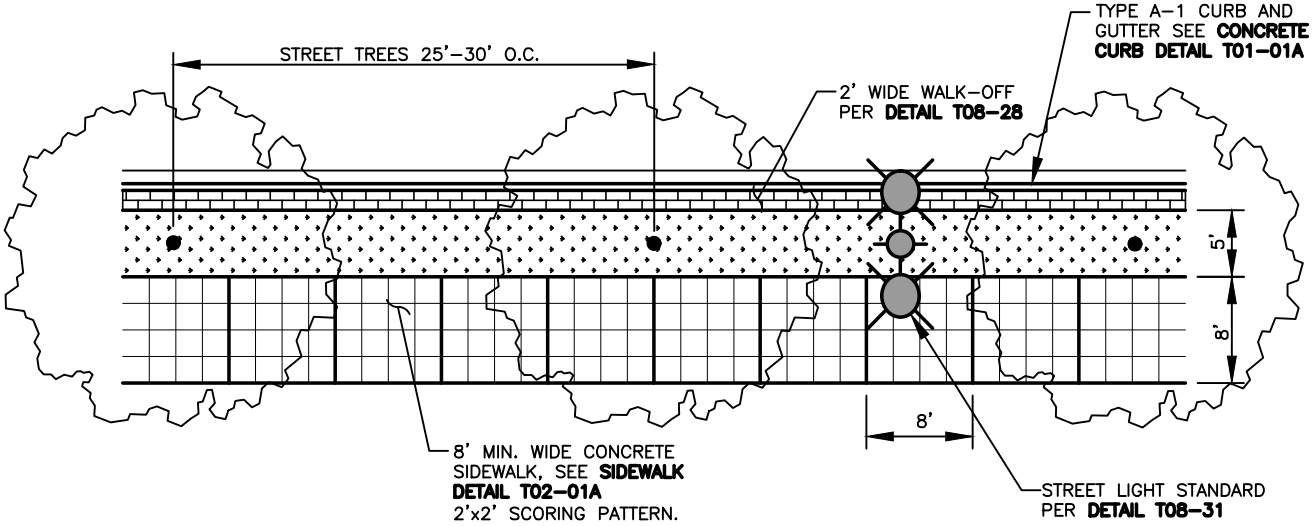

NOTES:

1. FINISH SHALL BE LIGHT BROOM PERPENDICULAR TO PEDESTRIAN TRAFFIC UNLESS OTHERWISE NOTED.
2. SIDEWALK PATTERN APPLIES TO HEIGHTS REDEVELOPMENT DESIGN AREA.
3. SCORE LINES SHALL BE CRISP AND WITHOUT SHINERS.

REV NO.	DATE	BY	APPR
1	9/21	RAW	MHA

PUBLIC WORKS – STREETS AND TRANSPORTATION

APPROVED BY: M H Abdalla
ENGINEER MANAGER
APPROVED DATE: 9/1/2021

CITY OF Vancouver WASHINGTON

HEIGHTS DISTRICT REDEVELOPMENT STANDARD STREET OVERVIEW

STANDARD PLAN NUMBER

T08–10

I:\CITYAPPS\AUTOCAD\STD_DETAILS\DRAWING_FILES\T08–10

I:\CITYAPPS\AUTOCAD\STD_DETAILS\DRAWING_FILES\T08-11

REV NO.	DATE	BY	APPR
1	9/21	RAW	MHA

PUBLIC WORKS – STREETS AND TRANSPORTATION

APPROVED BY: ENGINEER MANAGER

APPROVED DATE: 9/1/2021

CITY OF Vancouver WASHINGTON

HEIGHTS DISTRICT REDEVELOPMENT LOOP RESIDENTIAL STREET

STANDARD PLAN NUMBER T08-11

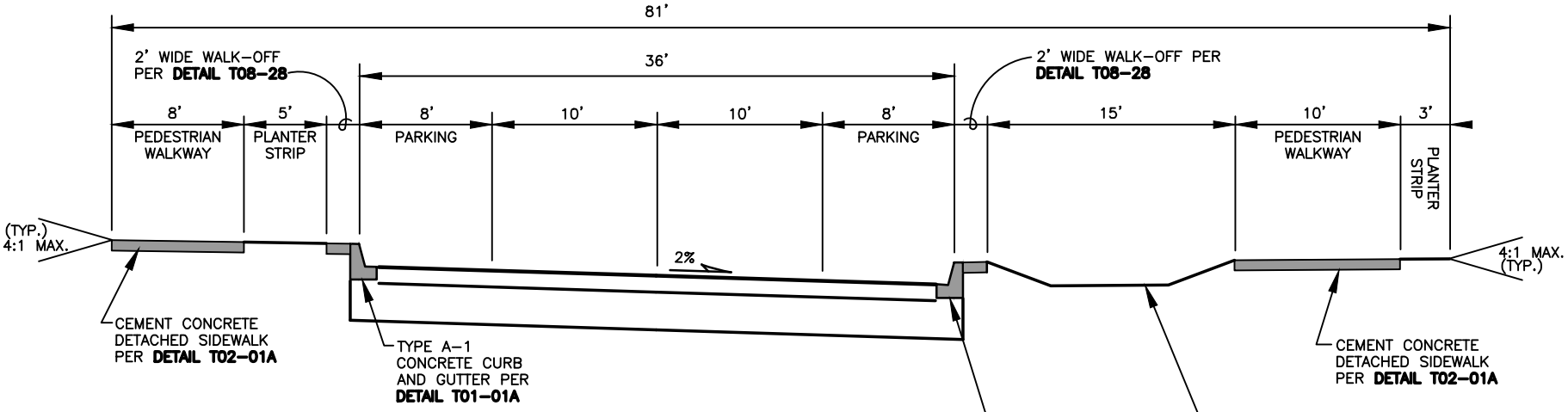

AASHTO SOIL TYPE	ASPHALT THICKNESS	BASE ROCK THICKNESS
A-1 TO A-5	0.40'	0.85'
A-6	0.45'	1.00'
A-7	NO SECTION	ESTIMATED
OTHER	NO SECTION	ESTIMATED

NOTES:

1. SEE STANDARD PLAN **T10-00** FOR GENERAL NOTES.
2. WIDER SIDEWALKS MAY BE REQUIRED UNDER SPECIAL CIRCUMSTANCES.
3. ADDITIONAL TRAFFIC CALMING MAY BE REQUIRED. COORDINATE WITH THE CITY.
4. BICYCLE STENCIL PAVEMENT MARKING (SHARROW) IS REQUIRED FOR ALL SHARED ROADWAY SEGMENTS. SEE STANDARD PLAN **T29-61**.
5. CENTER LINE STRIPING SHOULD NOT BE USED.
6. STORMWATER MANAGEMENT TO BE INCORPORATED. COORDINATE WITH THE CITY.
7. ALL NEIGHBORHOOD CIRCULATORS REQUIRE STREET LIGHTING, SEE STANDARD PLAN **T08-31**.

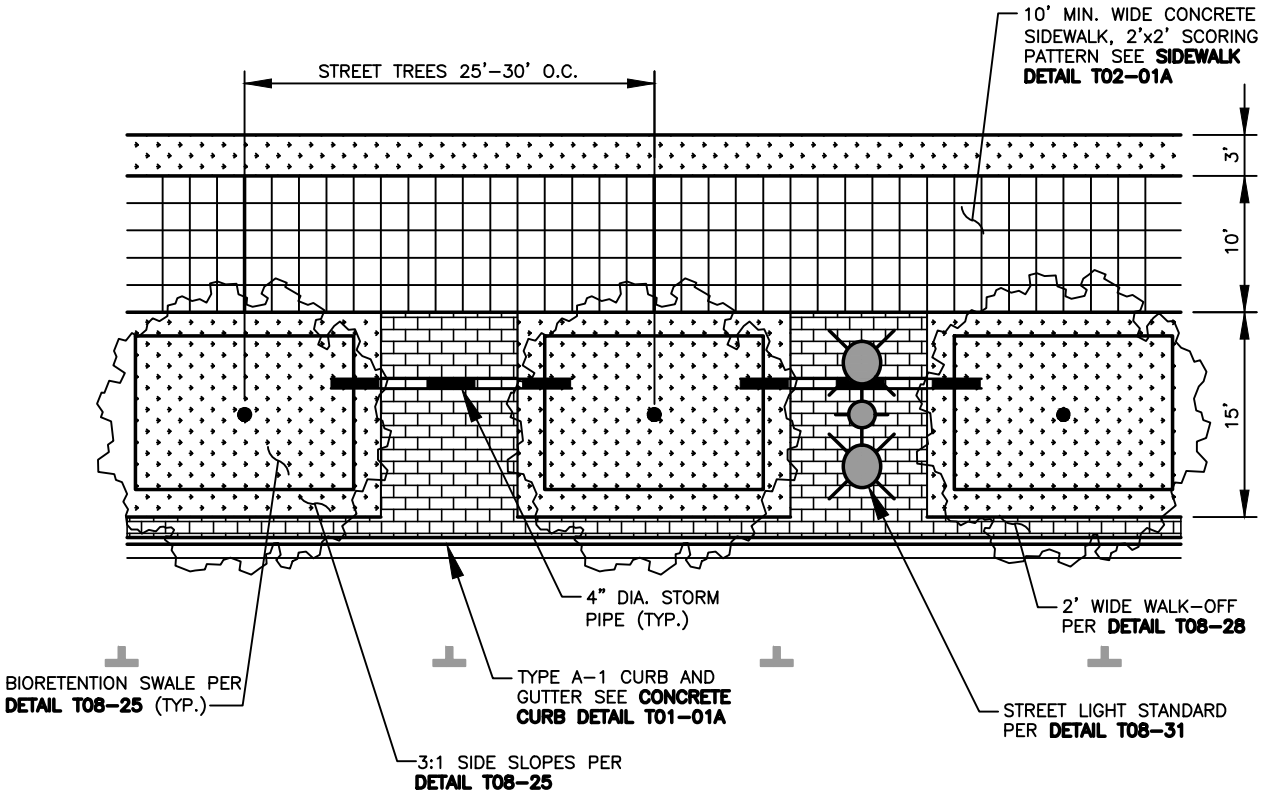

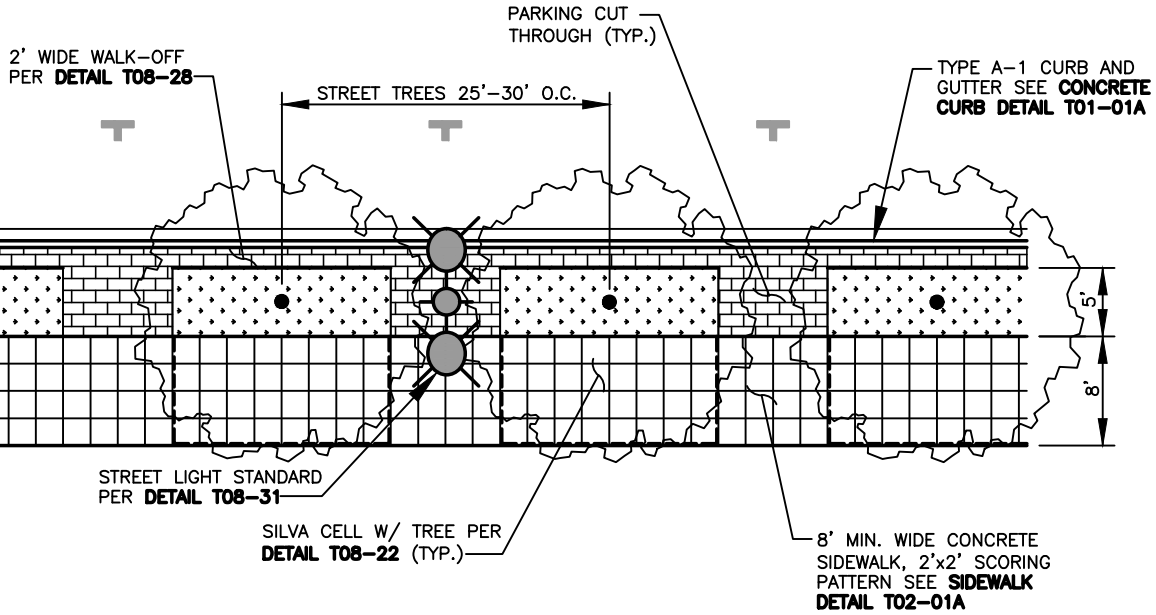

NOTES:

1. FINISH SHALL BE LIGHT BROOM PERPENDICULAR TO PEDESTRIAN TRAFFIC UNLESS OTHERWISE NOTED.
2. SIDEWALK PATTERN APPLIES TO HEIGHTS REDEVELOPMENT DESIGN AREA.
3. SCORE LINES SHALL BE CRISP AND WITHOUT SHINERS.

REV NO.	DATE	BY	APPR
1	9/21	RAW	MHA

PUBLIC WORKS – STREETS AND TRANSPORTATION

APPROVED BY: M H Abdalla
ENGINEER MANAGER
APPROVED DATE: 9/1/2021

CITY OF Vancouver WASHINGTON

HEIGHTS DISTRICT REDEVELOPMENT LOOP RESIDENTIAL STREET OVERVIEW

STANDARD PLAN NUMBER
T08–12

I:\CITYAPPS\AUTOCAD\STD_DETAILS\DRAWING_FILES\T08–12

I:\CITYAPPS\AUTOCAD\STD_DETAILS\DRAWING_FILES\T08-13

REV NO.	DATE	BY	APPR
1	9/21	RAW	MHA

PUBLIC WORKS – STREETS AND TRANSPORTATION

APPROVED BY: ENGINEER MANAGER

APPROVED DATE: 9/1/2021

CITY OF Vancouver WASHINGTON

HEIGHTS DISTRICT REDEVELOPMENT INTERNAL STREET ANGLED PARKING

STANDARD PLAN NUMBER T08-13

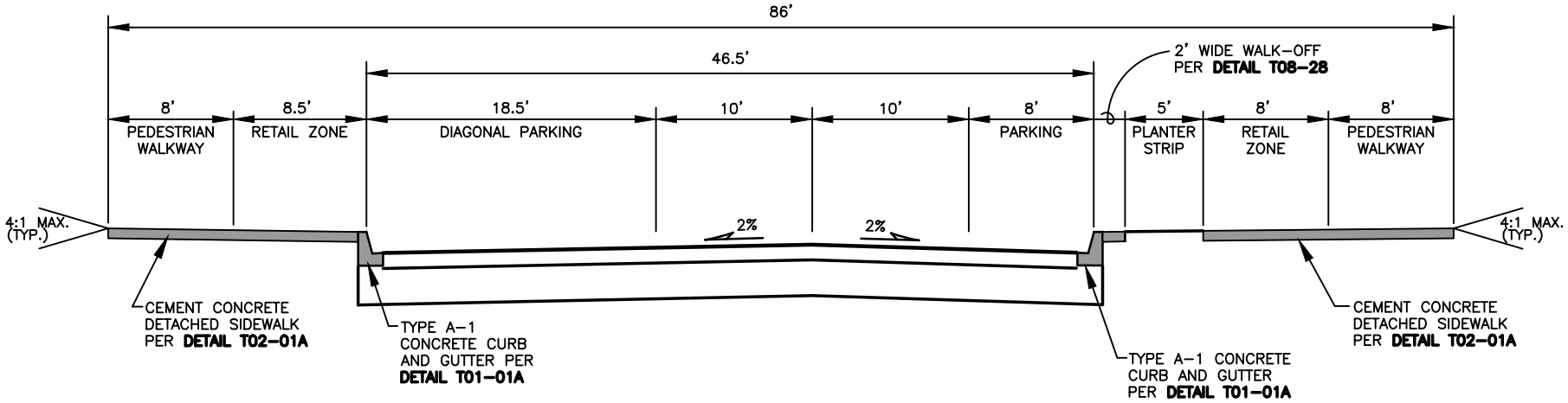

AASHTO SOIL TYPE	ASPHALT THICKNESS	BASE ROCK THICKNESS
A-1 TO A-5	0.40'	0.85'
A-6	0.45'	1.00'
A-7	NO SECTION ESTIMATED	
OTHER	NO SECTION ESTIMATED	

NOTES:

1. SEE STANDARD PLAN **T10-00** FOR GENERAL NOTES.
2. WIDER SIDEWALKS MAY BE REQUIRED UNDER SPECIAL CIRCUMSTANCES.
3. ADDITIONAL TRAFFIC CALMING MAY BE REQUIRED. COORDINATE WITH THE CITY.
4. BICYCLE STENCIL PAVEMENT MARKING (SHARROW) IS REQUIRED FOR ALL SHARED ROADWAY SEGMENTS. SEE STANDARD PLAN **T29-61**.
5. CENTER LINE STRIPING SHOULD NOT BE USED.
6. STORMWATER MANAGEMENT TO BE INCORPORATED. COORDINATE WITH THE CITY.
7. ALL NEIGHBORHOOD CIRCULATORS REQUIRE STREET LIGHTING, SEE STANDARD PLAN **T08-31**.
8. DIAGONAL PARKING IS BACK IN ONLY.

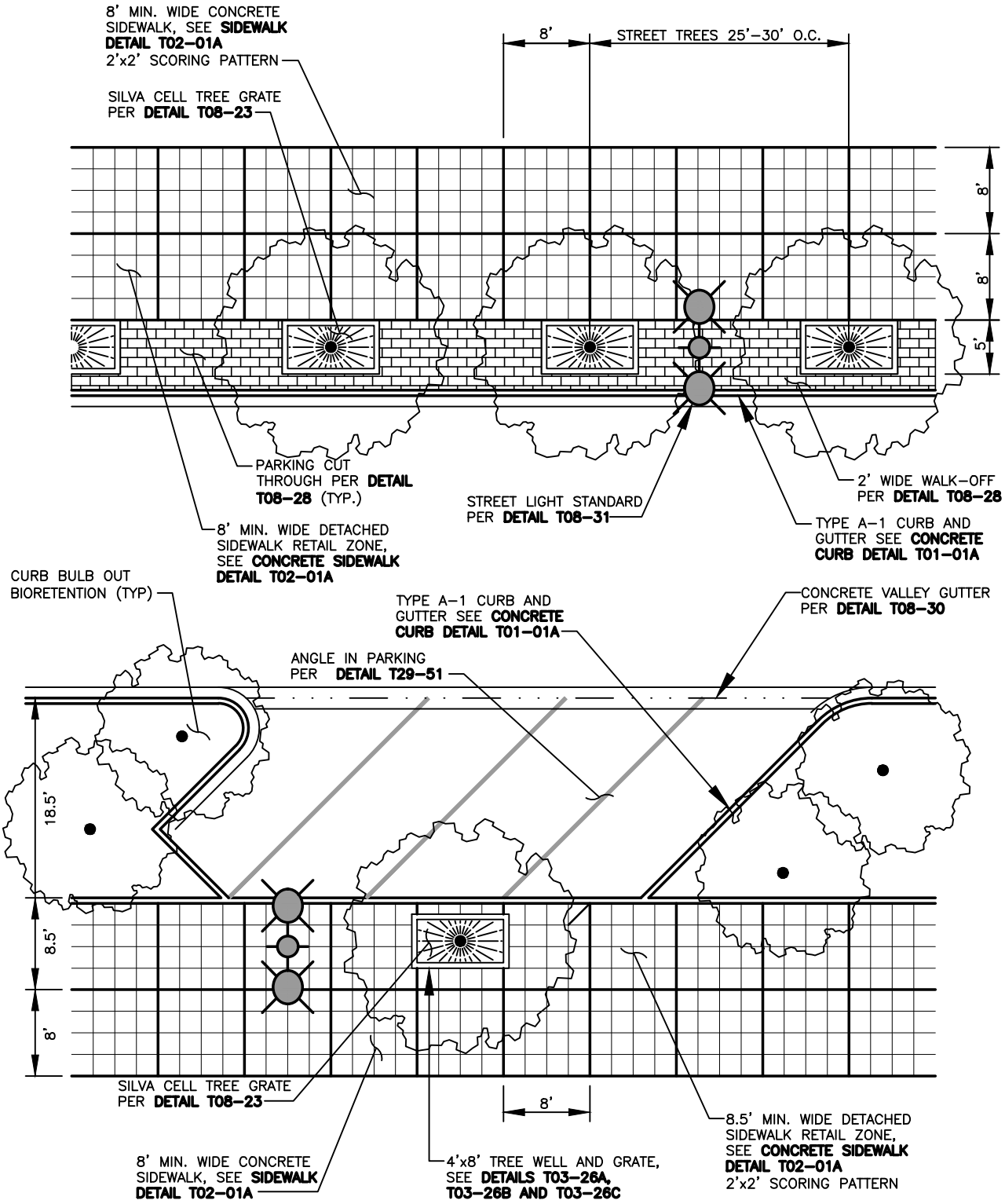

NOTES:

1. FINISH SHALL BE LIGHT BROOM PERPENDICULAR TO PEDESTRIAN TRAFFIC UNLESS OTHERWISE NOTED.
2. SIDEWALK PATTERN APPLIES TO HEIGHTS REDEVELOPMENT DESIGN AREA.
3. SCORE LINES SHALL BE CRISP AND WITHOUT SHINERS.
4. CUSTOM DESIGN MEASURES MAY BE REQUIRED TO MANAGE DEBRIS COLLECTION.

REV NO.	DATE	BY	APPR
1	9/21	RAW	MHA

PUBLIC WORKS – STREETS AND TRANSPORTATION

APPROVED BY: M H Abdalla
ENGINEER MANAGER
APPROVED DATE: 9/1/2021

CITY OF Vancouver WASHINGTON

HEIGHTS DISTRICT REDEVELOPMENT INTERNAL STREET ANGLED PARKING OVERVIEW

STANDARD PLAN NUMBER
T08-14

I:\CITYAPPS\AUTOCAD\STD_DETAILS\DRAWING_FILES\T08-14

I:\CITYAPPS\AUTOCAD\STD_DETAILS\DRAWING_FILES\T08-15

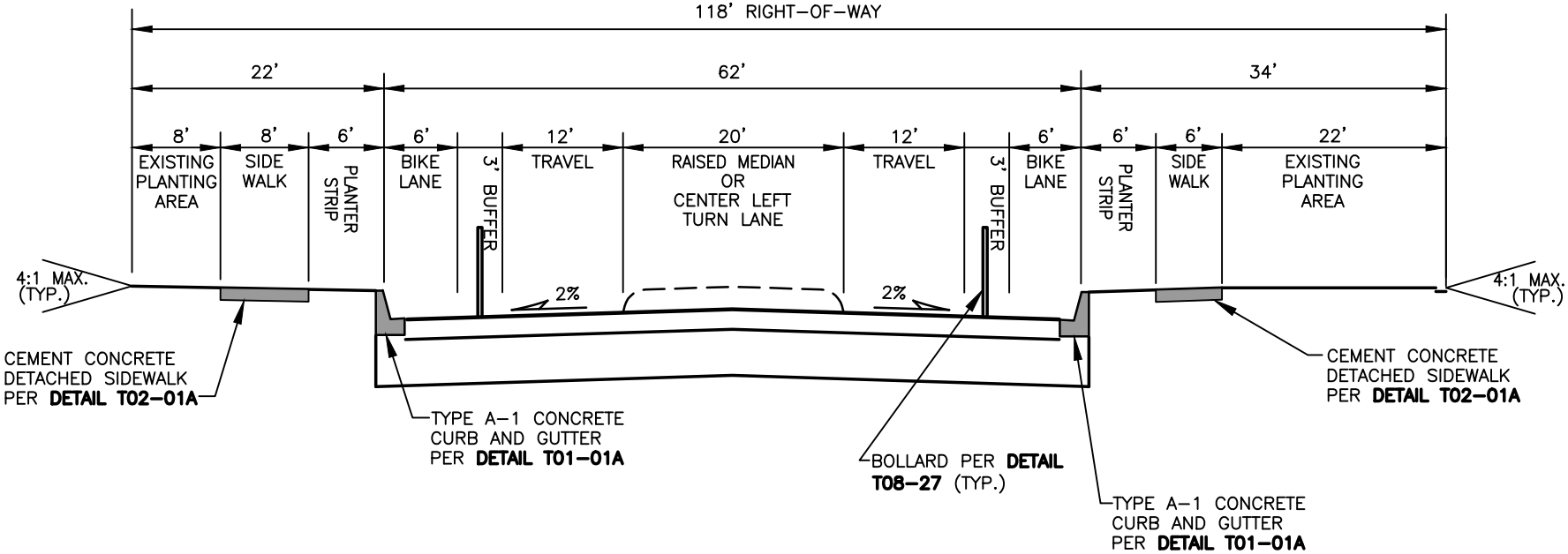

AASHTO SOIL TYPE	ASPHALT THICKNESS	BASE ROCK THICKNESS
A-1 TO A-5	0.75'	0.85'
A-6	0.80'	1.25'
A-7	NO SECTION ESTIMATED	
OTHER	NO SECTION ESTIMATED	

NOTES:

1. SEE STANDARD PLAN **T10-00** FOR GENERAL NOTES.
2. WIDER SIDEWALKS MAY BE REQUIRED UNDER SPECIAL CIRCUMSTANCES.
3. ADDITIONAL TRAFFIC CALMING MAY BE REQUIRED. COORDINATE WITH THE CITY.
4. STORMWATER MANAGEMENT TO BE INCORPORATED. COORDINATE WITH THE CITY.
5. ALL ARTERIAL STREETS REQUIRE STREET LIGHTING, SEE STANDARD PLAN **T08-31**.
6. SEE **DETAIL T02-18** FOR MEDIAN CONSTRUCTION.

REV NO.	DATE	BY	APPR
1	9/21	RAW	MHA

PUBLIC WORKS – STREETS AND TRANSPORTATION

APPROVED BY: ENGINEER MANAGER

APPROVED DATE: 9/1/2021

CITY OF Vancouver WASHINGTON

HEIGHTS DISTRICT REDEVELOPMENT ANDRESEN ROAD

STANDARD PLAN NUMBER

T08-15

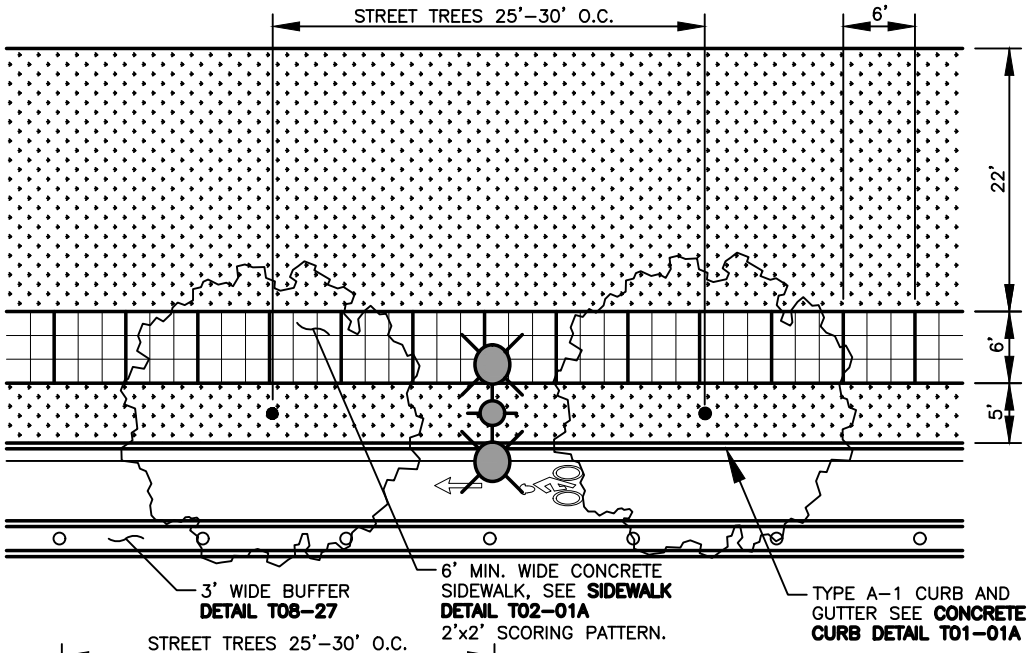

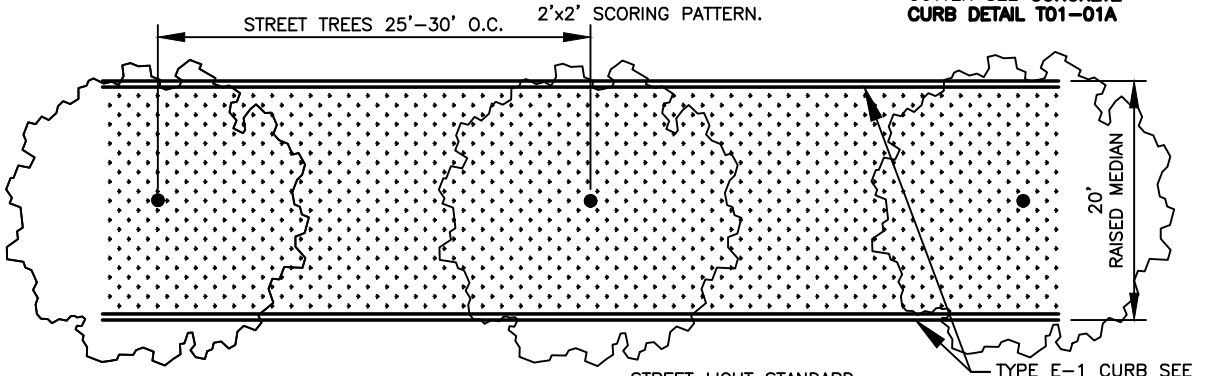

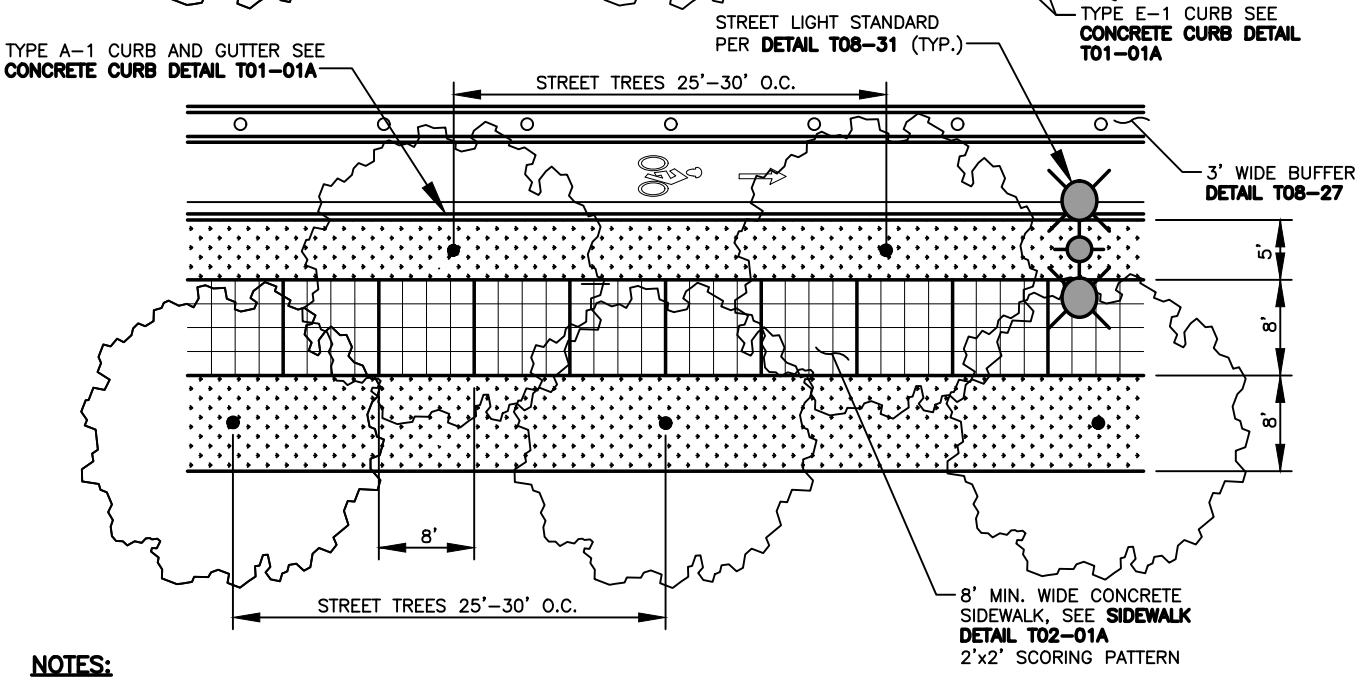

NOTES:

1. FINISH SHALL BE LIGHT BROOM PERPENDICULAR TO PEDESTRIAN TRAFFIC UNLESS OTHERWISE NOTED.
2. SIDEWALK PATTERN APPLIES TO HEIGHTS REDEVELOPMENT DESIGN AREA.
3. SCORE LINES SHALL BE CRISP AND WITHOUT SHINERS.

REV NO.	DATE	BY	APPR
1	9/21	RAW	MHA

PUBLIC WORKS – STREETS AND TRANSPORTATION

APPROVED BY: M H Abdalla
ENGINEER MANAGER
APPROVED DATE: 9/1/2021

CITY OF Vancouver WASHINGTON

HEIGHTS DISTRICT REDEVELOPMENT ANDRESEN ROAD OVERVIEW

STANDARD PLAN NUMBER
T08–16

I:\CITYAPPS\AUTOCAD\STD_DETAILS\DRAWING_FILES\T08–16

I:\CITYAPPS\AUTOCAD\STD_DETAILS\DRAWING_FILES\T08-17

REV NO.	DATE	BY	APPR
1	9/21	RAW	MHA

PUBLIC WORKS – STREETS AND TRANSPORTATION

APPROVED BY: ENGINEER MANAGER

APPROVED DATE: 9/1/2021

CITY OF Vancouver WASHINGTON

HEIGHTS DISTRICT REDEVELOPMENT

RAISED CONCRETE CROSSWALK

STANDARD PLAN NUMBER T08-17

NOTE:

SEE DETAIL THIS SHEET FOR TYPICAL SECTION B–B

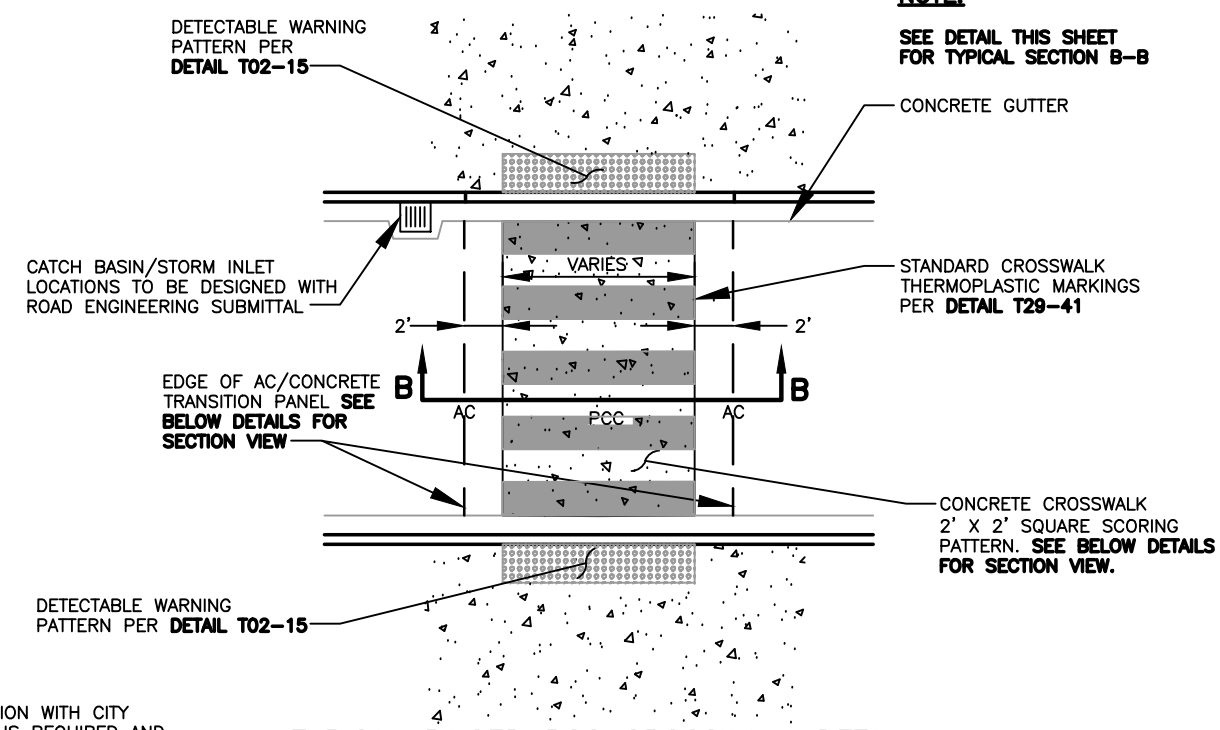

NOTE:
SPECIFIC DESIGN COORDINATION WITH CITY STORM WATER MANAGEMENT IS REQUIRED AND MAY RESULT IN ADDITIONAL STORMWATER FACILITIES OR CUSTOM DETAIL DESIGN.

TYPICAL RAISED PCC CROSSWALK DETAIL

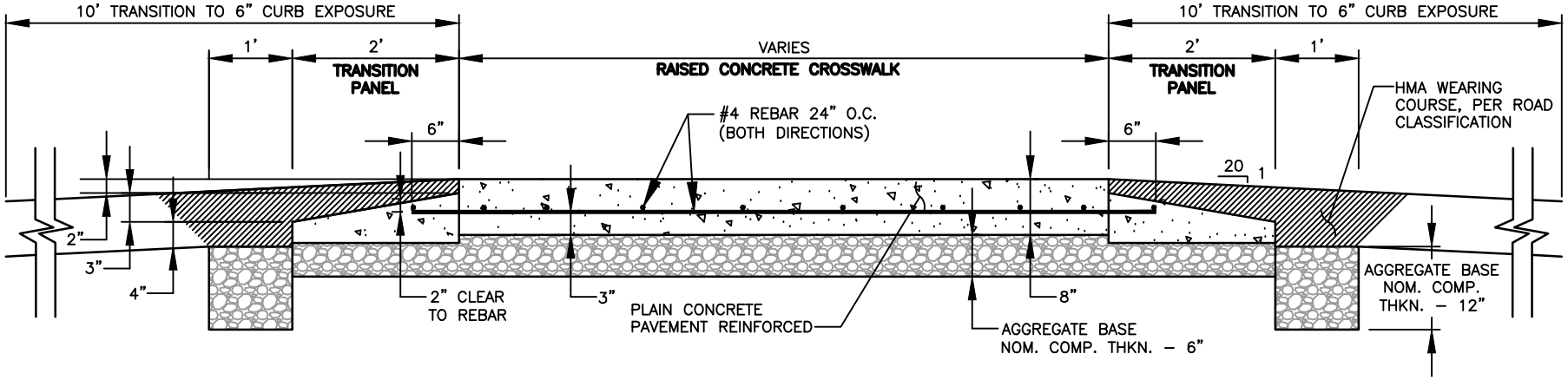

RAISED PCC CROSSWALK DETAIL SECTION B–B

I:\CITYAPPS\AUTOCAD\STD_DETAILS\DRAWING_FILES\T08-18

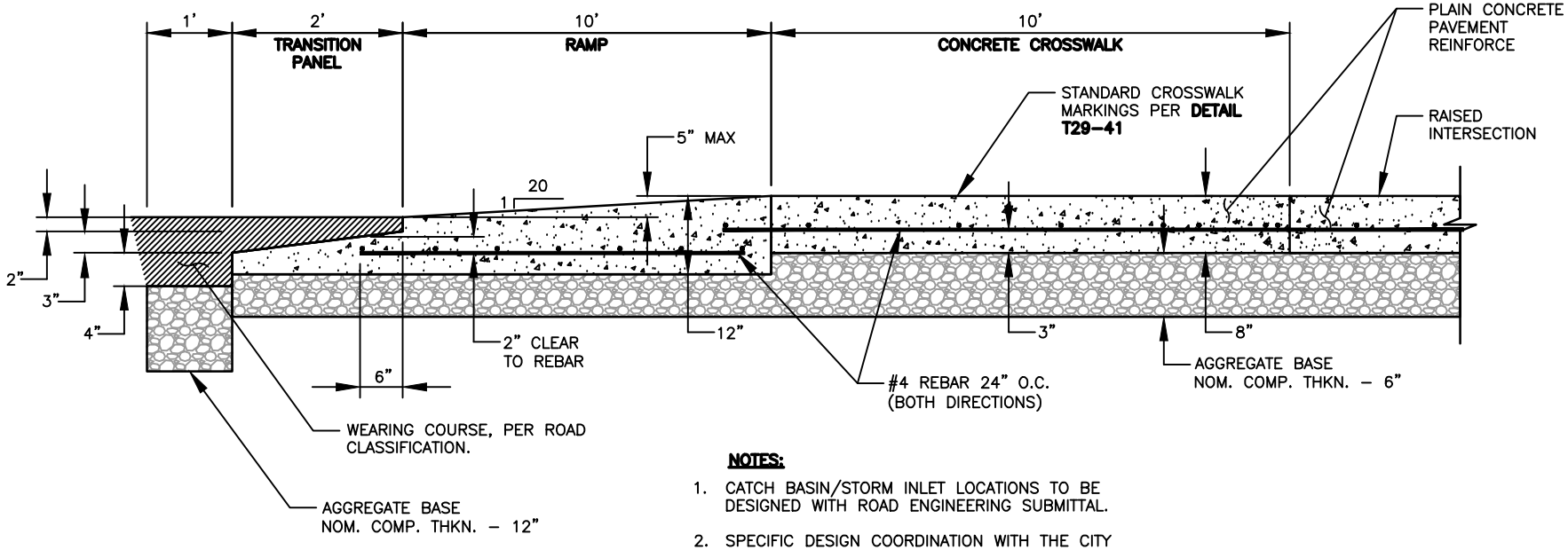

NOTES:

1. CATCH BASIN/STORM INLET LOCATIONS TO BE DESIGNED WITH ROAD ENGINEERING SUBMITTAL.
2. SPECIFIC DESIGN COORDINATION WITH THE CITY STORM WATER MANAGEMENT IS REQUIRED AND MAY RESULT IN ADDITIONAL STORMWATER FACILITIES OR CUSTOM DETAIL DESIGN.

RAISED CONCRETE INTERSECTION

REV NO.	DATE	BY	APPR
1	9/21	RAW	MHA

PUBLIC WORKS – STREETS AND TRANSPORTATION

APPROVED BY: ENGINEER MANAGER

APPROVED DATE: 9/1/2021

CITY OF Vancouver WASHINGTON

HEIGHTS DISTRICT REDEVELOPMENT

RAISED CONCRETE INTERSECTION

STANDARD PLAN NUMBER

T08-18

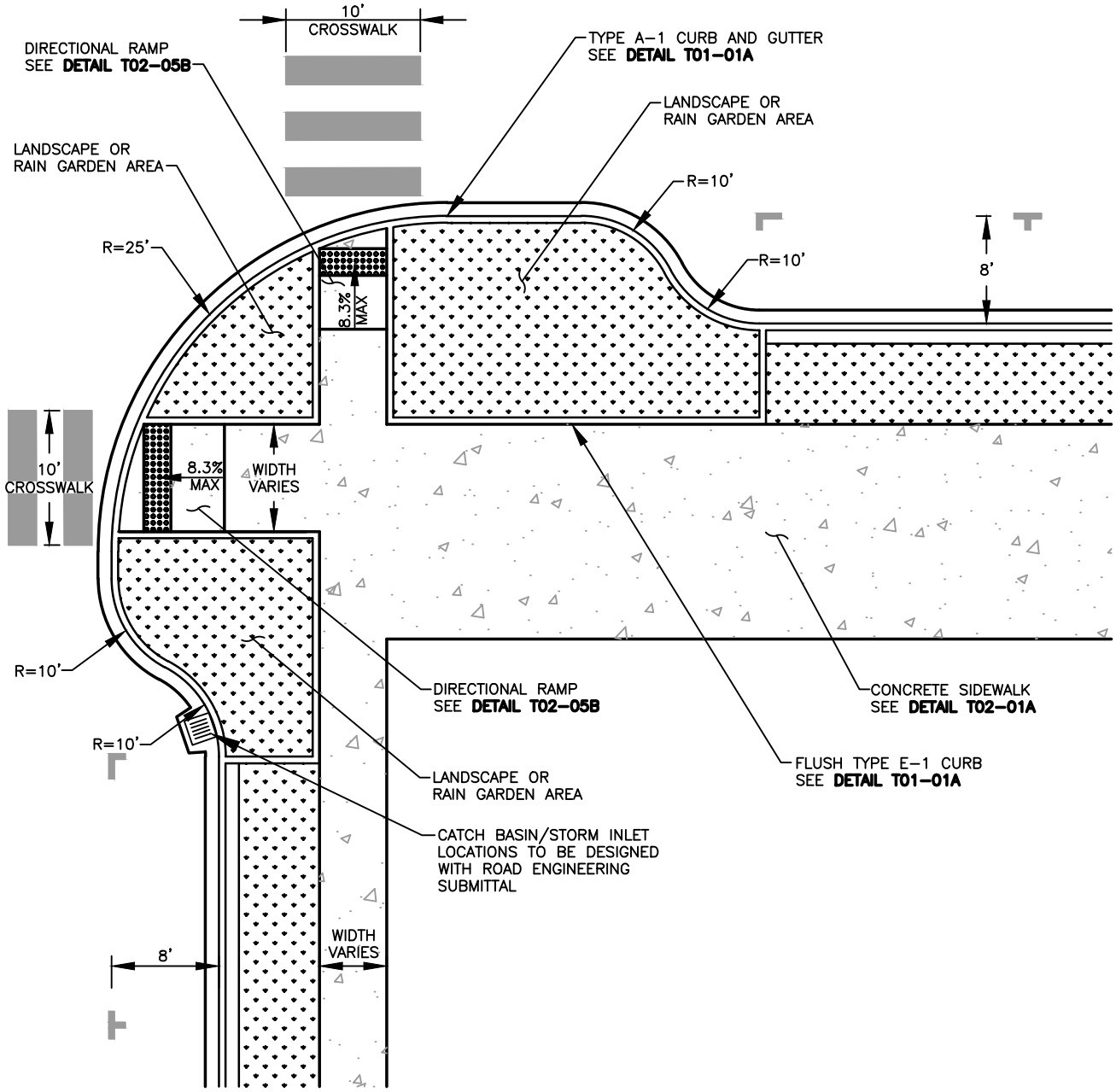

NOTE:
LIGHTING AT PEDESTRIAN CROSSING PER
CURRENT CITY PEDESTRIAN CROSSING POLICY.

TYPICAL BULB-OUT AT STANDARD ASPHALT INTERSECTION

REV NO.	DATE	BY	APPR
1	9/21	RAW	MHA

PUBLIC WORKS – STREETS AND TRANSPORTATION

APPROVED BY: M H Abdalla
ENGINEER MANAGER
APPROVED DATE: 9/1/2021

CITY OF Vancouver WASHINGTON

HEIGHTS DISTRICT
REDEVELOPMENT
STANDARD CURB BULB-OUT

STANDARD PLAN NUMBER
T08-19

I:\CITYAPPS\AUTOCAD\STD_DETAILS\DRAWING_FILES\T08-19

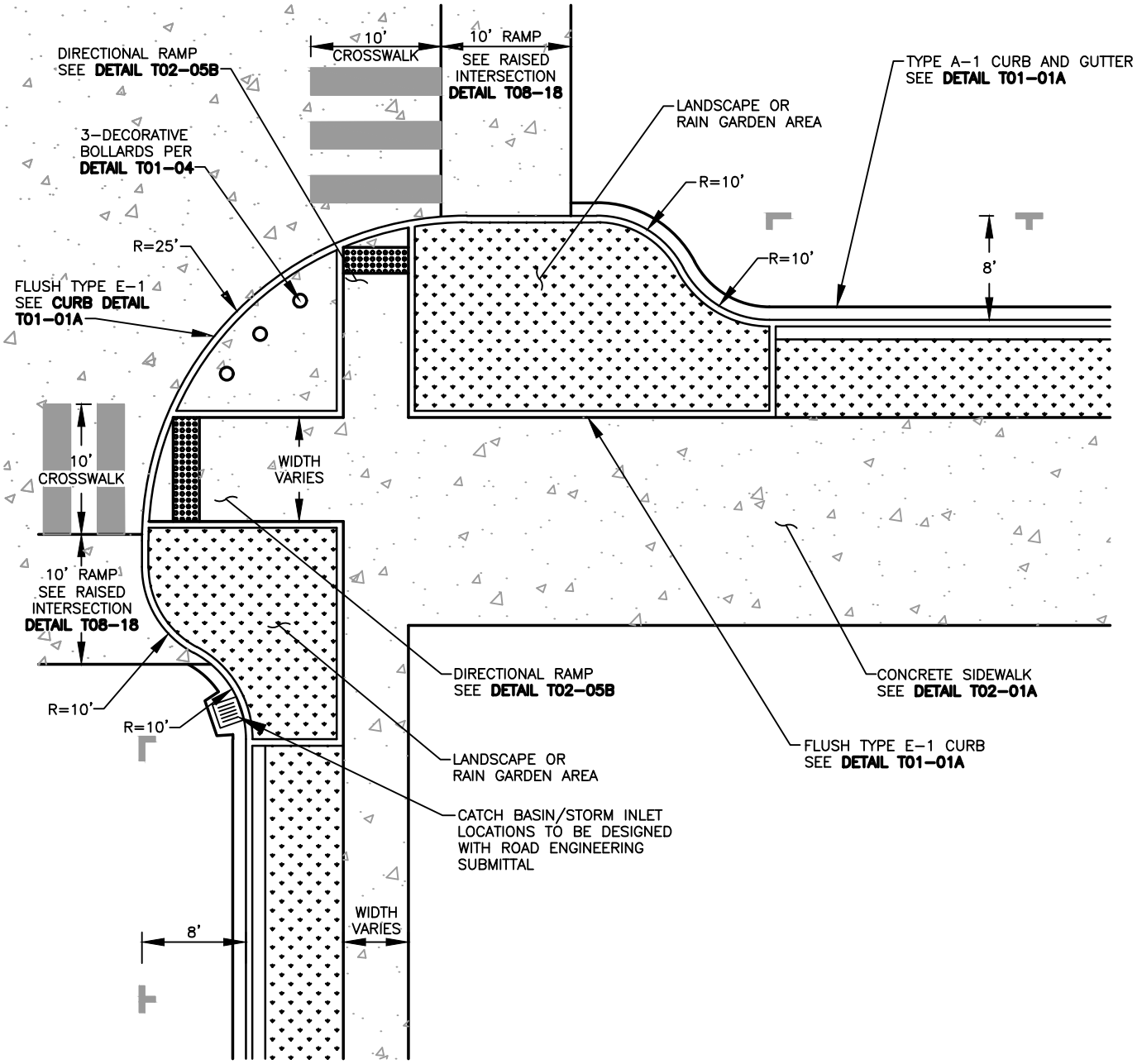

NOTE:
LIGHTING AT PEDESTRIAN CROSSING PER
CURRENT CITY PEDESTRIAN CROSSING POLICY.

TYPICAL BULB-OUT AT CONCRETE RAISED INTERSECTION

REV NO.	DATE	BY	APPR
1	9/21	RAW	MHA

PUBLIC WORKS – STREETS AND TRANSPORTATION

APPROVED BY: M H Abdallah
ENGINEER MANAGER
APPROVED DATE: 9/1/2021

CITY OF Vancouver WASHINGTON

HEIGHTS DISTRICT
REDEVELOPMENT CURB
BULB-OUT RAISED INTERSECTION

STANDARD PLAN NUMBER
T08-20

I:\CITYAPPS\AUTOCAD\STD_DETAILS\DRAWING_FILES\T08-20

I:\CITYAPPS\AUTOCAD\STD_DETAILS\DRAWING_FILES\T08-21

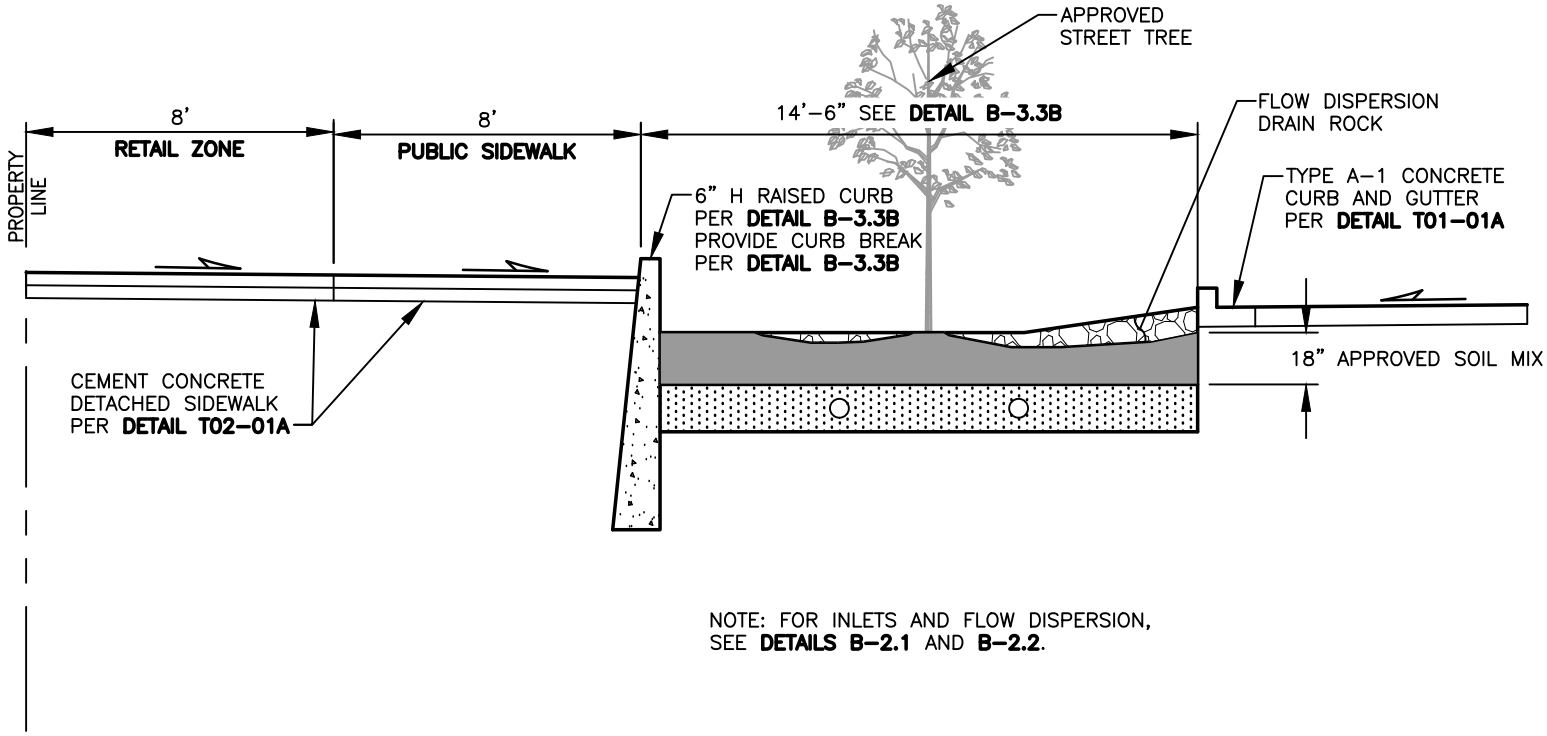

NOTE: FOR INLETS AND FLOW DISPERSION,
SEE **DETAILS B-2.1** AND **B-2.2**.

REV NO.	DATE	BY	APPR
1	9/21	RAW	MHA

PUBLIC WORKS – STREETS AND TRANSPORTATION

APPROVED BY: ENGINEER MANAGER

APPROVED DATE: 9/1/2021

CITY OF Vancouver WASHINGTON

HEIGHTS DISTRICT REDEVELOPMENT
BULB-OUT BIORETENTION

STANDARD PLAN NUMBER
T08-21

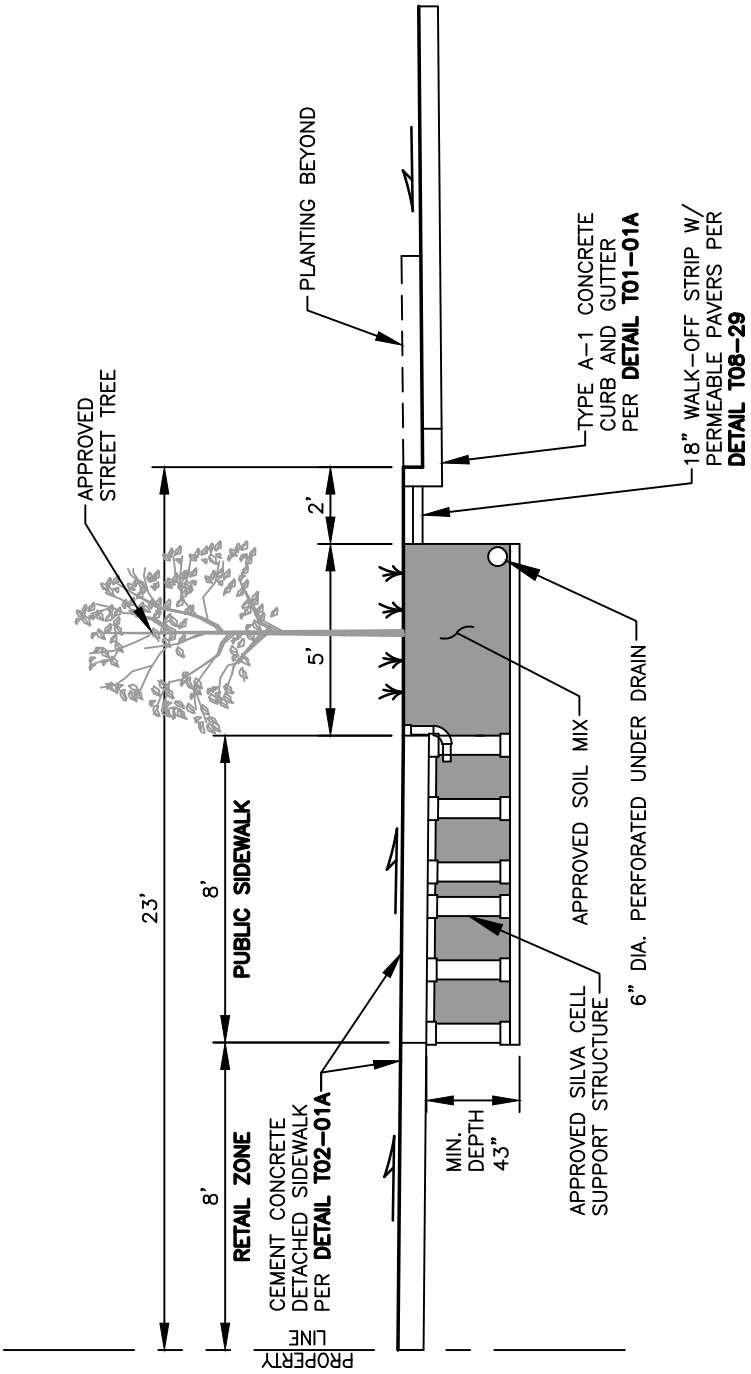

REV NO.	DATE	BY	APPR
1	9/21	RAW	MHA

PUBLIC WORKS – STREETS AND TRANSPORTATION

APPROVED BY: M H Abdalla
ENGINEER MANAGER
APPROVED DATE: 9/1/2021

CITY OF Vancouver WASHINGTON

HEIGHTS DISTRICT REDEVELOPMENT SILVA CELL PLANTER

STANDARD PLAN NUMBER

T08-22

I:\CITYAPPS\AUTOCAD\STD_DETAILS\DRAWING_FILES\T08-22

I:\CITYAPPS\AUTOCAD\STD_DETAILS\DRAWING_FILES\T08-22

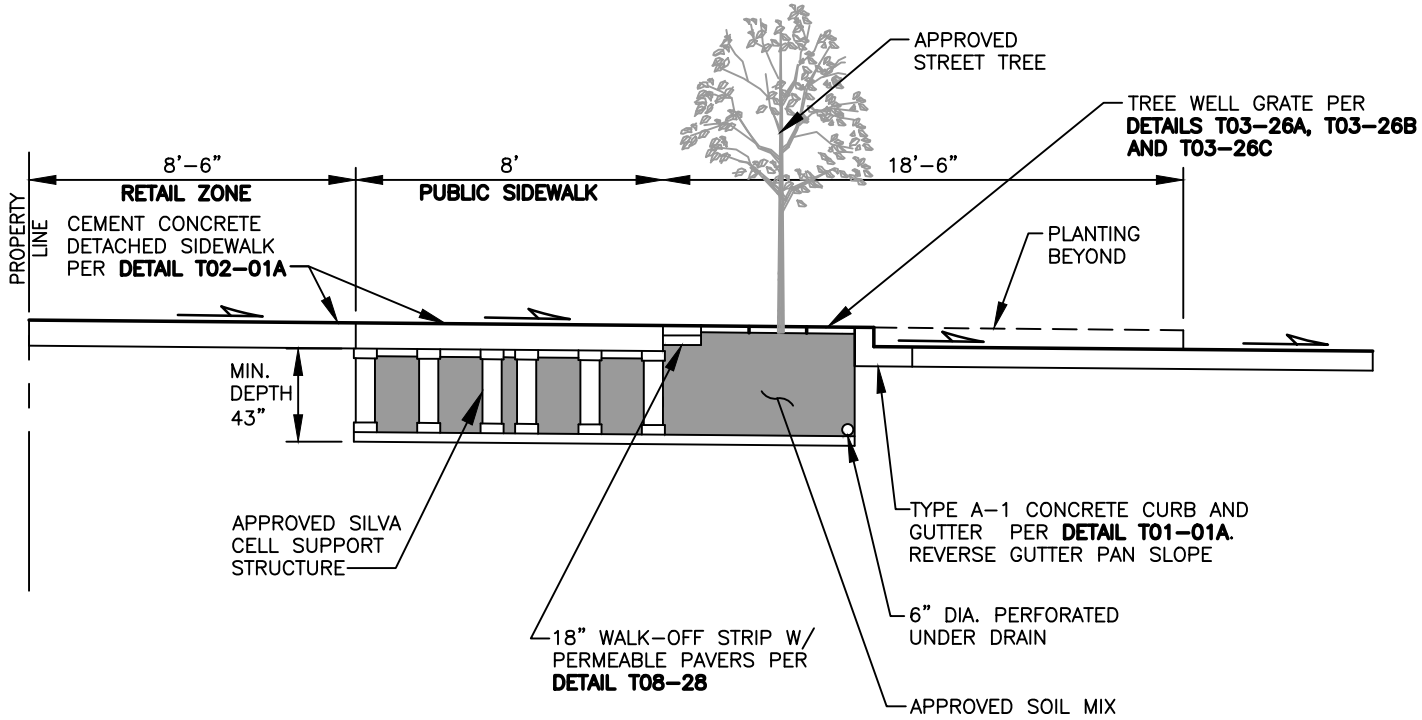

REV NO.	DATE	BY	APPR
1	9/21	RAW	MHA

PUBLIC WORKS – STREETS AND TRANSPORTATION

APPROVED BY: ENGINEER MANAGER

APPROVED DATE: 9/1/2021

CITY OF Vancouver WASHINGTON

HEIGHTS DISTRICT REDEVELOPMENT

SILVA CELL WITH TREE GRATE

STANDARD PLAN NUMBER

T08-23

I:\CITYAPPS\AUTOCAD\STD_DETAILS\DRAWING_FILES\T08-24

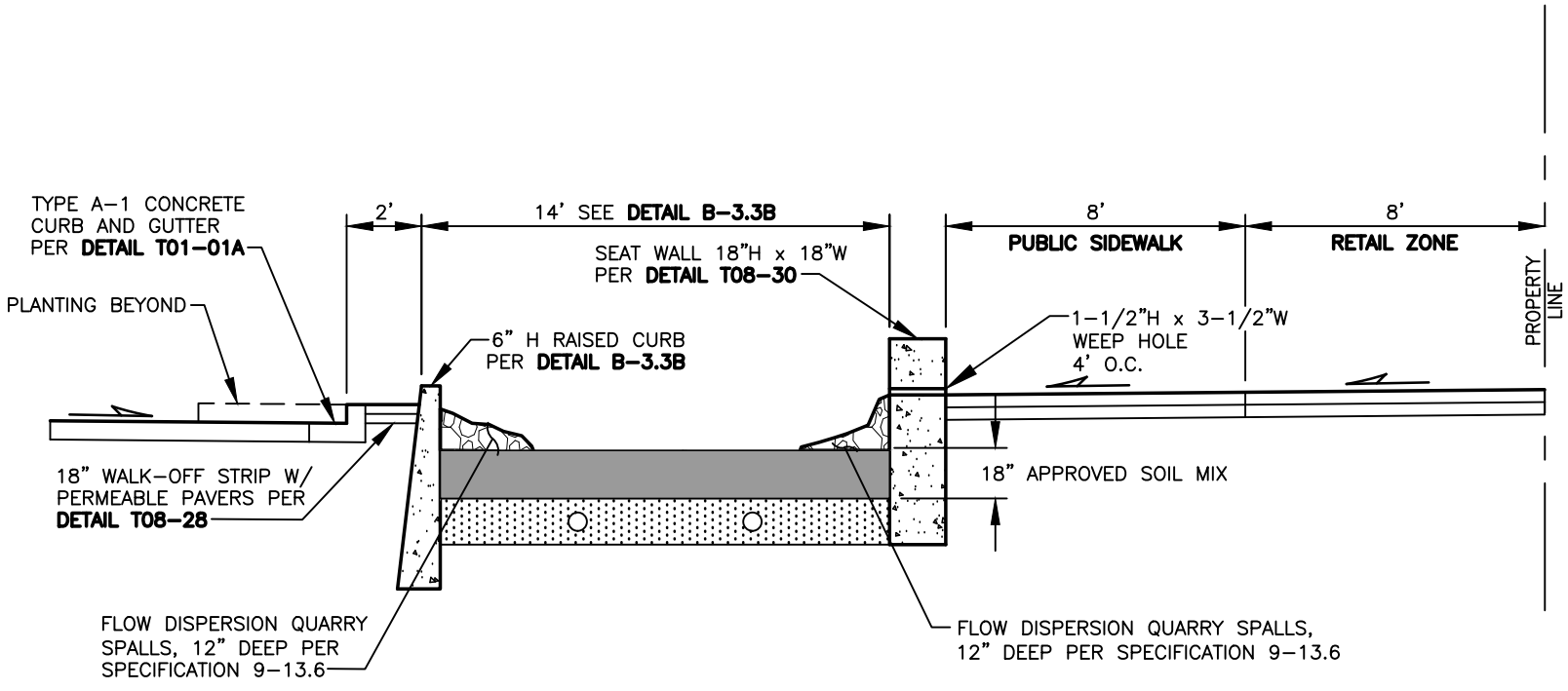

NOTE: FOR INLETS AND FLOW DISPERSION, SEE **DETAILS B-2.1** AND **B-2.2**.

REV NO.	DATE	BY	APPR
1	9/21	RAW	MHA

PUBLIC WORKS – STREETS AND TRANSPORTATION

APPROVED BY: ENGINEER MANAGER

APPROVED DATE: 9/1/2021

CITY OF Vancouver WASHINGTON

HEIGHTS DISTRICT REDEVELOPMENT

DEEP RETAIL LOOP BIORETENTION

STANDARD PLAN NUMBER

T08-24

I:\CITYAPPS\AUTOCAD\STD_DETAILS\DRAWING_FILES\T08-25

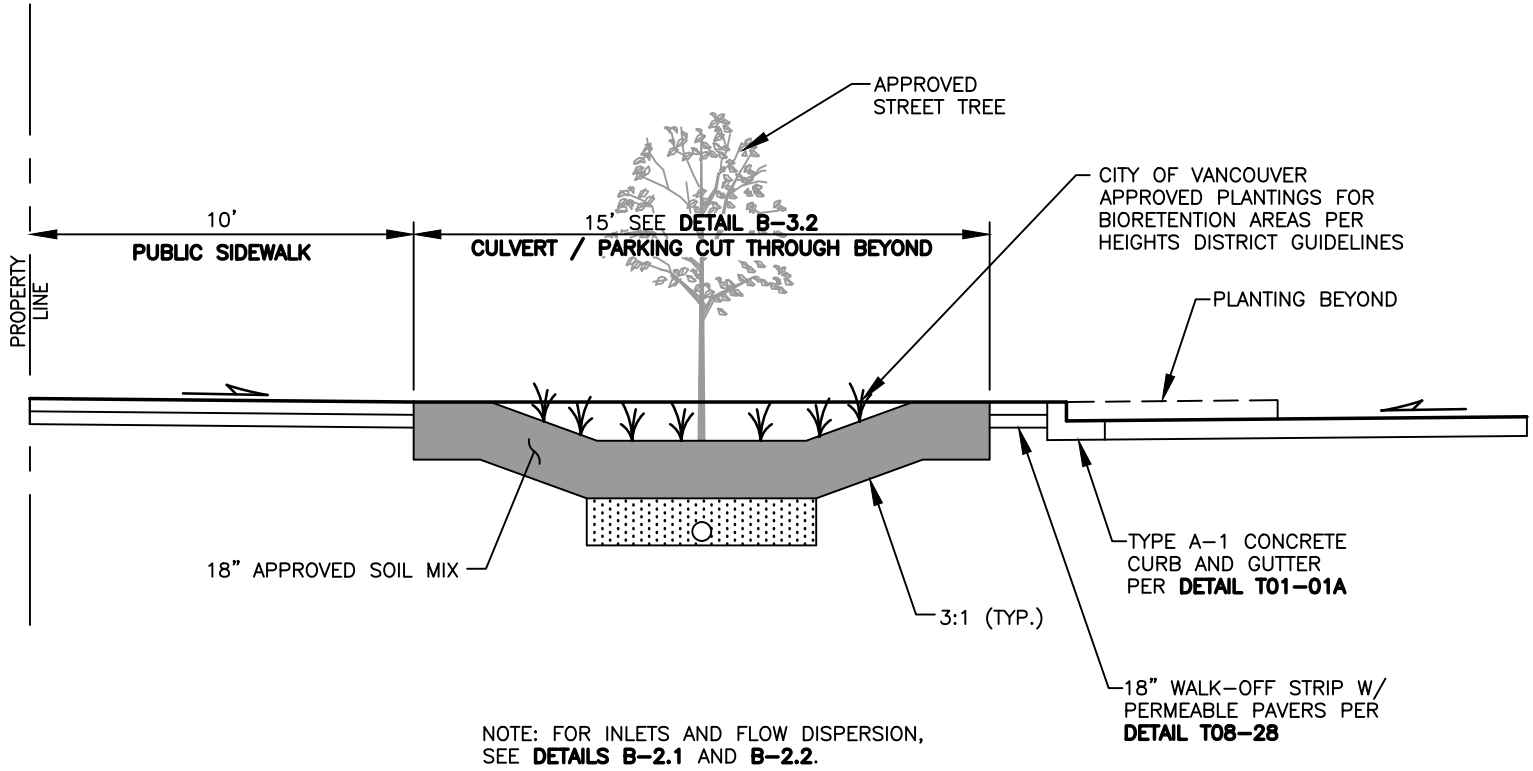

NOTE: FOR INLETS AND FLOW DISPERSION,
SEE **DETAILS B-2.1** AND **B-2.2**.

REV NO.	DATE	BY	APPR
1	9/21	RAW	MHA

PUBLIC WORKS – STREETS AND TRANSPORTATION

APPROVED BY: ENGINEER MANAGER

APPROVED DATE: 9/1/2021

CITY OF Vancouver WASHINGTON

HEIGHTS DISTRICT
REDEVELOPMENT
BIORETENTION SWALE

STANDARD PLAN NUMBER

T08-25

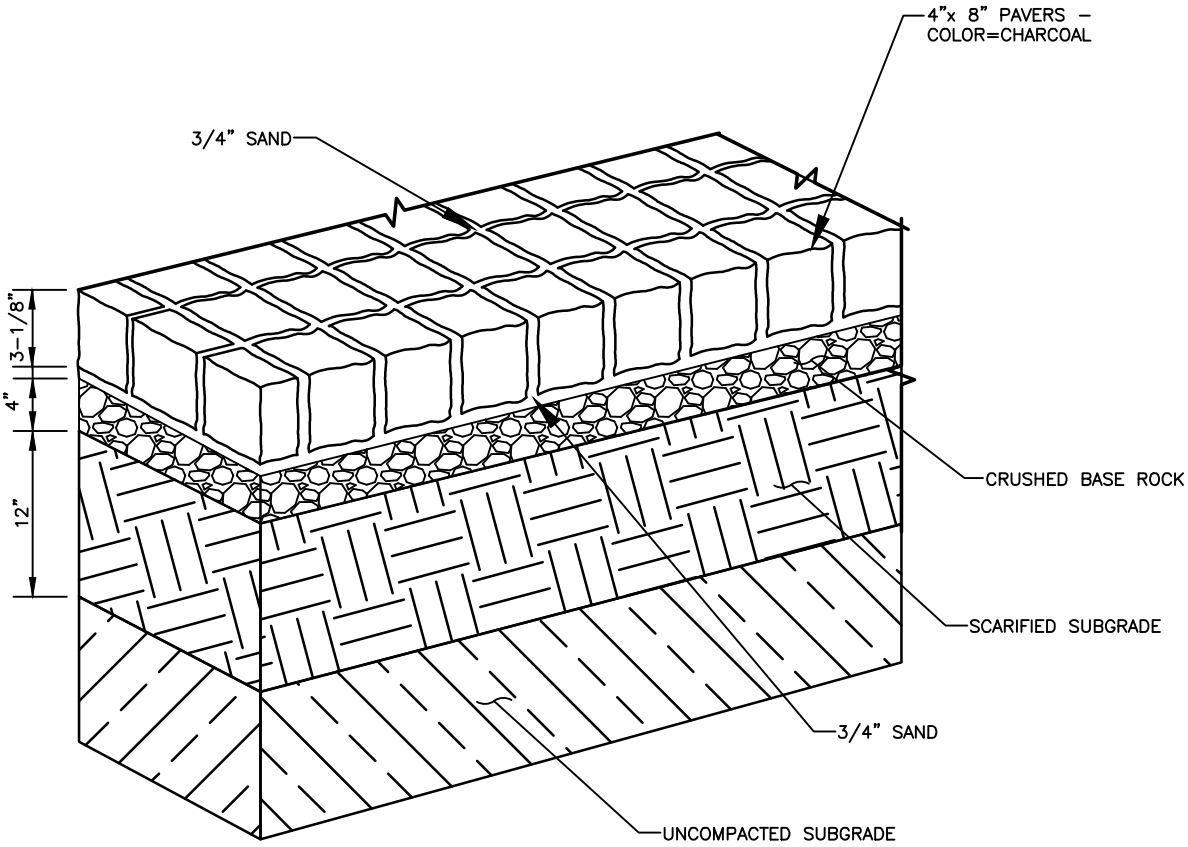

REV NO.	DATE	BY	APPR
1	9/21	RAW	MHA

PUBLIC WORKS – STREETS AND TRANSPORTATION

APPROVED BY: M H Abdalla
ENGINEER MANAGER

APPROVED DATE: 9/1/2021

CITY OF Vancouver WASHINGTON

HEIGHTS DISTRICT REDEVELOPMENT SAND SET PAVERS

STANDARD PLAN NUMBER

T08–26

I:\CITYAPPS\AUTOCAD\STD_DETAILS\DRAWING_FILES\T08-26

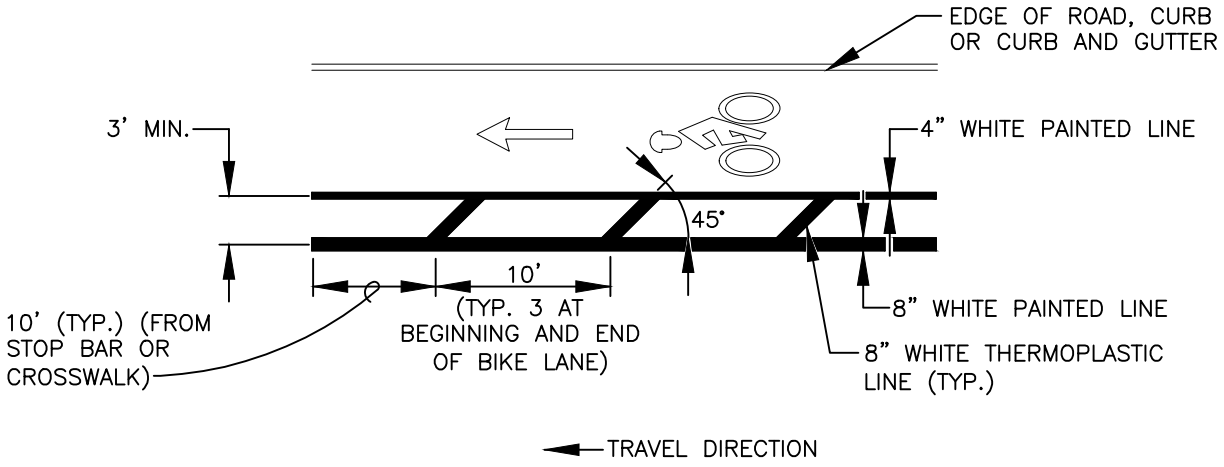

BIKE LANE BUFFER ZONE AREA MARKING

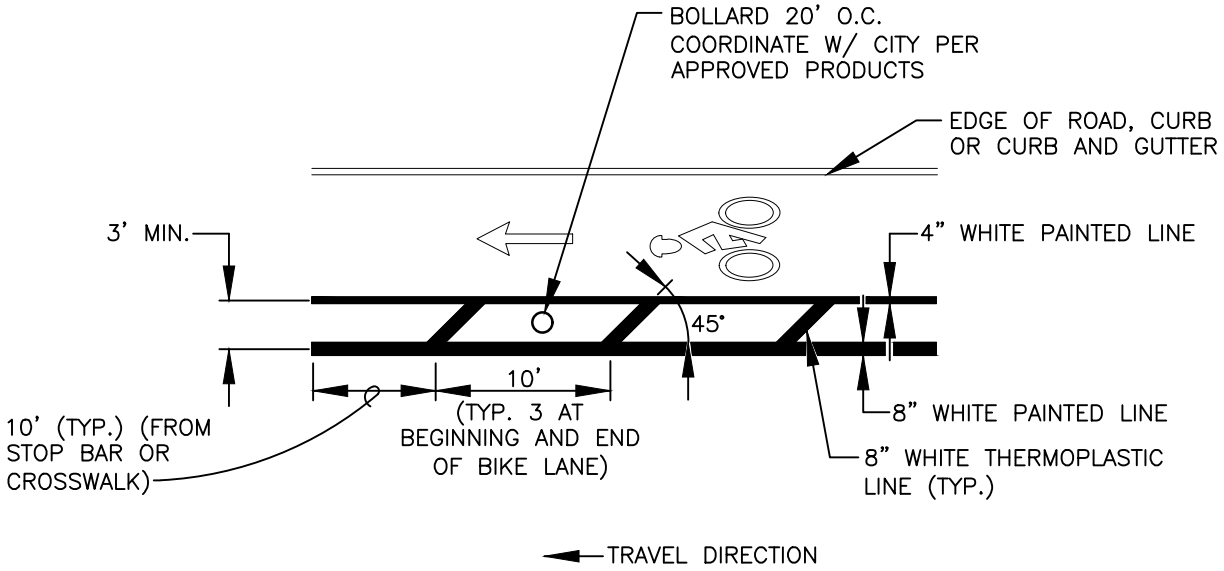

BIKE LANE BUFFER ZONE AREA MARKING WITH BOLLARDS

I:\CITYAPPS\AUTOCAD\STD_DETAILS\DRAWING_FILES\T08-27

REV NO.	DATE	BY	APPR
1	9/21	RAW	CJC

PUBLIC WORKS – STREETS AND TRANSPORTATION

APPROVED BY: TRAFFIC ENGINEER MANAGER

APPROVED DATE: 9/1/2021

CITY OF Vancouver WASHINGTON

HEIGHTS DISTRICT
REDEVELOPMENT
BIKE LANE BUFFERS

STANDARD PLAN NUMBER

T08–27

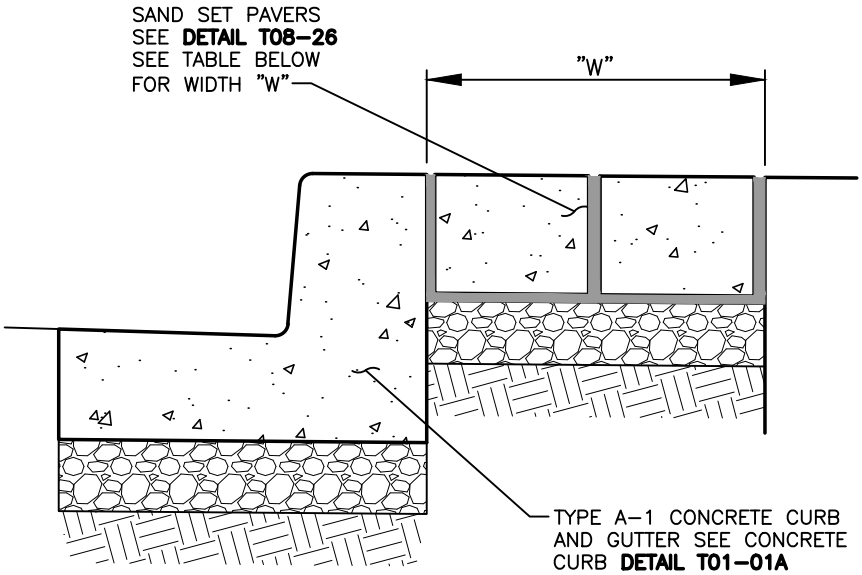

ROAD SECTION	WIDTH "W"
MILL PLAIN BLVD.	1.0'
MACARTHUR BLVD.	1.0'
DEVINE RD.	1.0'
LOOP RETAIL STREET	1.5'
STANDARD STREET	1.5'
LOOP RESIDENTIAL STREET	1.5'
INTERNAL STREET ANGLED PARKING	1.5'
ANDRESEN RD.	1.0'

I:\CITYAPPS\AUTOCAD\STD_DETAILS\DRAWING_FILES\T08-28

REV NO.	DATE	BY	APPR
1	9/21	RAW	MHA

PUBLIC WORKS – STREETS AND TRANSPORTATION

APPROVED BY: M H Abdalla
ENGINEER MANAGER
APPROVED DATE: 9/1/2021

CITY OF Vancouver WASHINGTON

HEIGHTS DISTRICT REDEVELOPMENT WALK–OFF

STANDARD PLAN NUMBER

T08–28

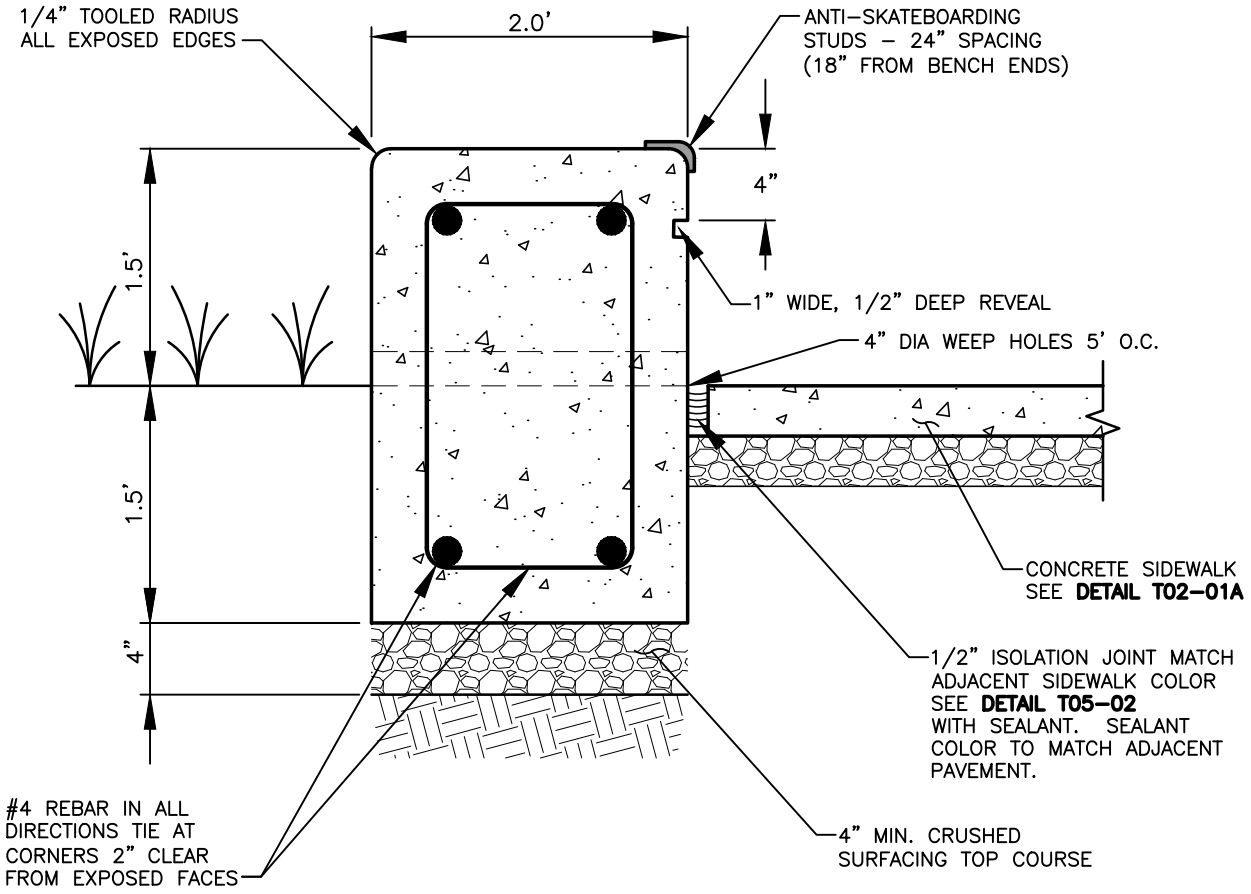

NOTES:

1. ANTI-SKATEBOARDING DEVICES TO BE INSTALLED ON BOTH TOP EDGES OF SEAT WALL WITH 2' SPACING.
2. SACK, PATCH, AND RUB SMOOTH ALL EXPOSED SURFACES.

REV NO.	DATE	BY	APPR
1	9/21	RAW	MHA

PUBLIC WORKS - STREETS AND TRANSPORTATION

APPROVED BY: M H Abdalla
ENGINEER MANAGER
APPROVED DATE: 9/1/2021

CITY OF Vancouver WASHINGTON

HEIGHTS DISTRICT REDEVELOPMENT CONCRETE SEAT WALL

STANDARD PLAN NUMBER

T08-29

I:\CITYAPPS\AUTOCAD\STD_DETAILS\DRAWING_FILES\T08-29

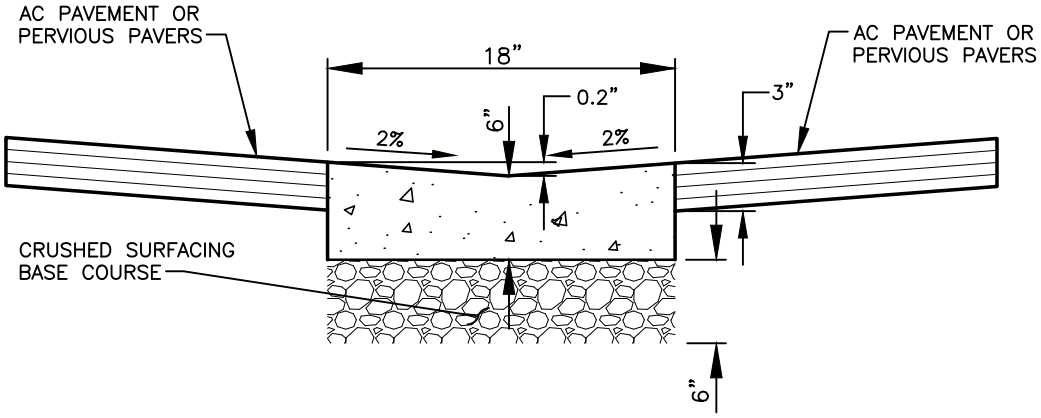

NOTES:

1. CONCRETE CURBS SHALL BE 3000 PSI MIN. (CL 3000), 3–1/2" SLUMP (MAX.), DRIVEWAY OPENINGS SHALL BE 4000 PSI MIN. (CL 4000).

2. CURBS ADJACENT TO PAVEMENT OR SIDEWALK SHALL HAVE EXPANSION AND/OR CONSTRUCTION JOINTS TOMATCH EXISTING PATTERNS. 3/8" EXPANSION JOINTS SHALL BE PLACED ON BOTH SIDES OF CATCH BASINS, ALL CHANGES IN DIRECTION, AND AS DIRECTED BY THE INSPECTOR. CONTRACTION JOINTS TO BE PLACED AT 15' MAXIMUM SPACING.

3. COMPACT SUBGRADE AND CRUSHED SURFACING TOP COURSE TO 95% MAXIMUM DRY DENSITY (6" MIN. DEPTH).

4. CURB TO BE MEDIUM BROOM FINISHED, PARALLEL TO GUTTER LINE.

REV NO.	DATE	BY	APPR
1	9/21	RAW	MHA

PUBLIC WORKS – STREETS AND TRANSPORTATION

APPROVED BY: M H Abdalla
ENGINEER MANAGER
APPROVED DATE: 9/1/2021

CITY OF Vancouver WASHINGTON

HEIGHTS DISTRICT REDEVELOPMENT CONCRETE VALLEY GUTTER

STANDARD PLAN NUMBER

T08–30

I:\CITYAPPS\AUTOCAD\STD_DETAILS\DRAWING_FILES\T08–30

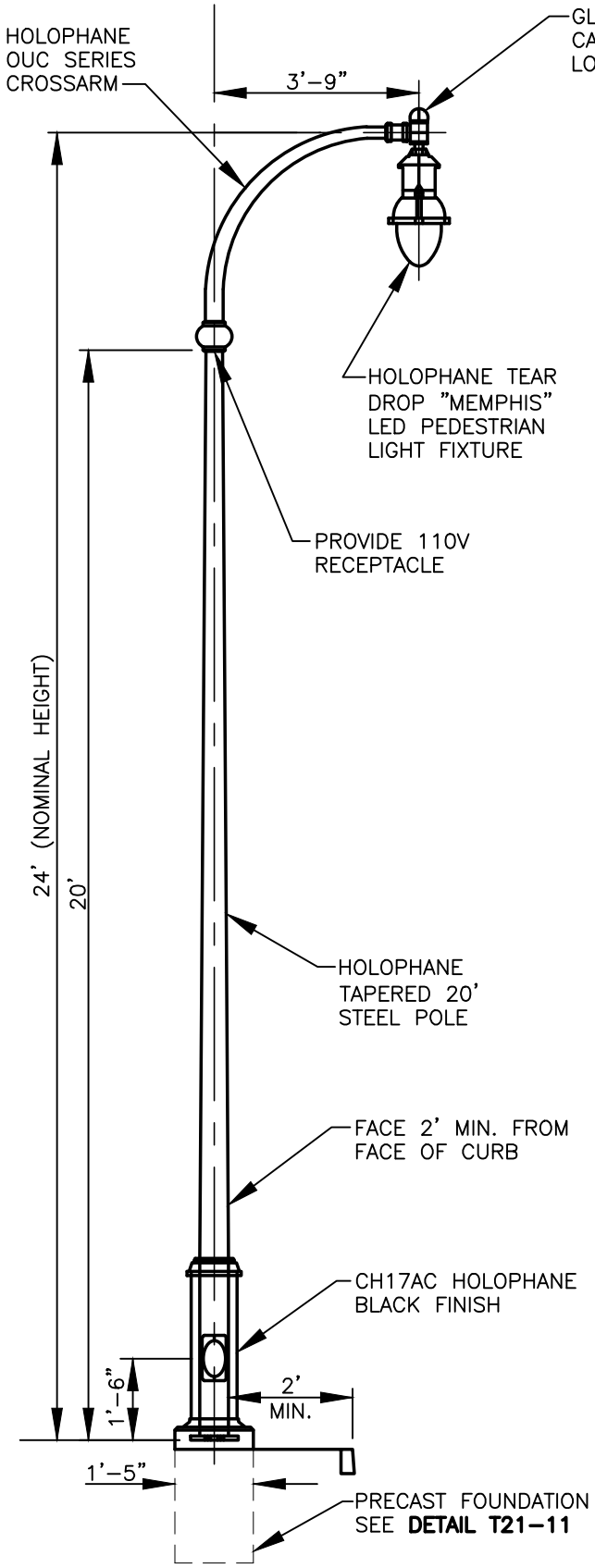

HOLOPHANE CATALOG #'S:
DS210–650A200P9–CH17AC–AB–27–4
–RFD170638–OUC45/1CABKH–MSPL

SPECIFICATIONS

GENERAL DESCRIPTION:
THE LIGHTING POST SHALL BE ALL STEEL, ONE PIECE CONSTRUCTION, CONSISTING OF A TAPERED SHAFT WELDED TO A STEEL ANCHOR BASE. THE SINGLE OUC SERIES ARM WILL HAVE A SPAN OF 45".

MATERIAL:
THE SHAFT SHALL CONFORM TO ASTM A595 GRADE–A AND IS SUPPLIED IN 11GA THICKNESS. THE ANCHOR BASE IS FABRICATED FROM STRUCTURAL QUALITY HOT ROLLED CARBON STEEL PLATE CONFORMING TO ASTM A36. THE BASE PLATE TELESCOPES THE POLE SHAFT AND IS CIRCUMFERENTIALLY WELDED TOP AND BOTTOM.

DIMENSIONS:
THE POST SHALL BE 20'–0" IN HEIGHT. A ø3.5" BY 8" TENON WILL BE PROVIDED FOR ARM MOUNTING.

WIRE ACCESS:
A REINFORCING HANDHOLE RIM IS PROVIDED ON THE POST AND IS MADE OF A RECTANGULAR SHAPED TUBING MATERIAL. IT IS PROVIDED WITH ONE OR TWO STEEL ATTACHMENT BARS, STEEL COVER, AND ONE OR TWO ROUND HEAD MACHINE SCREWS. THE HANDHOLE IS WELDED IN THE POST SHAFT AND IS LOCATED 1'–6" ABOVE THE BASE.

INSTALLATION:
THE POST WILL USE FOR L–TYPE ANCHOR BOLTS TO BE INSTALLED ON A ø9.5" BOLT CIRCLE.

FINISH:
THE ENTIRE POST ASSEMBLY WILL HAVE A STANDARD HOLOPHANE BLACK FINISH.

LUMINAIRE:
- MEMPHIS LED PEDESTRIAN
- 77W 700MA DRIVER, 4 K CCT
- AUTO–SENSING 120–277V
- TEARDROP ASYMMETRIC

FOR COMPLETE SPECIFICATIONS SEE LUM_MSPL.

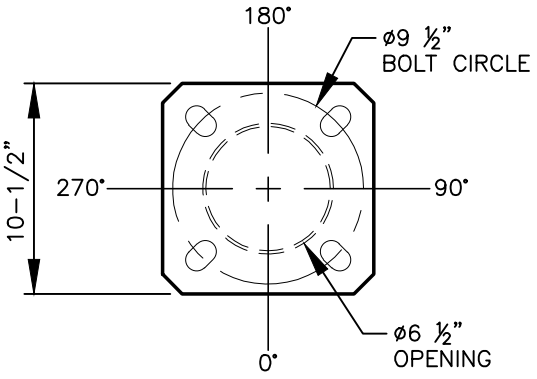

DO NOT USE TO SET ANCHOR BOLTS
CONTACT CUSTOMER SERVICE FOR TEMPLATE

ANCHORAGE DETAIL

REV NO.	DATE	BY	APPR
1	9/21	RAW	CJC

PUBLIC WORKS – STREETS AND TRANSPORTATION

APPROVED BY: TRAFFIC ENGINEER MANAGER
APPROVED DATE: 9/1/2021

CITY OF Vancouver WASHINGTON

HEIGHTS DISTRICT REDEVELOPMENT
LED STREET LIGHT STANDARD

STANDARD PLAN NUMBER
T08–31

I:\CITYAPPS\AUTOCAD\STD_DETAILS\DRAWING_FILES\T08–31

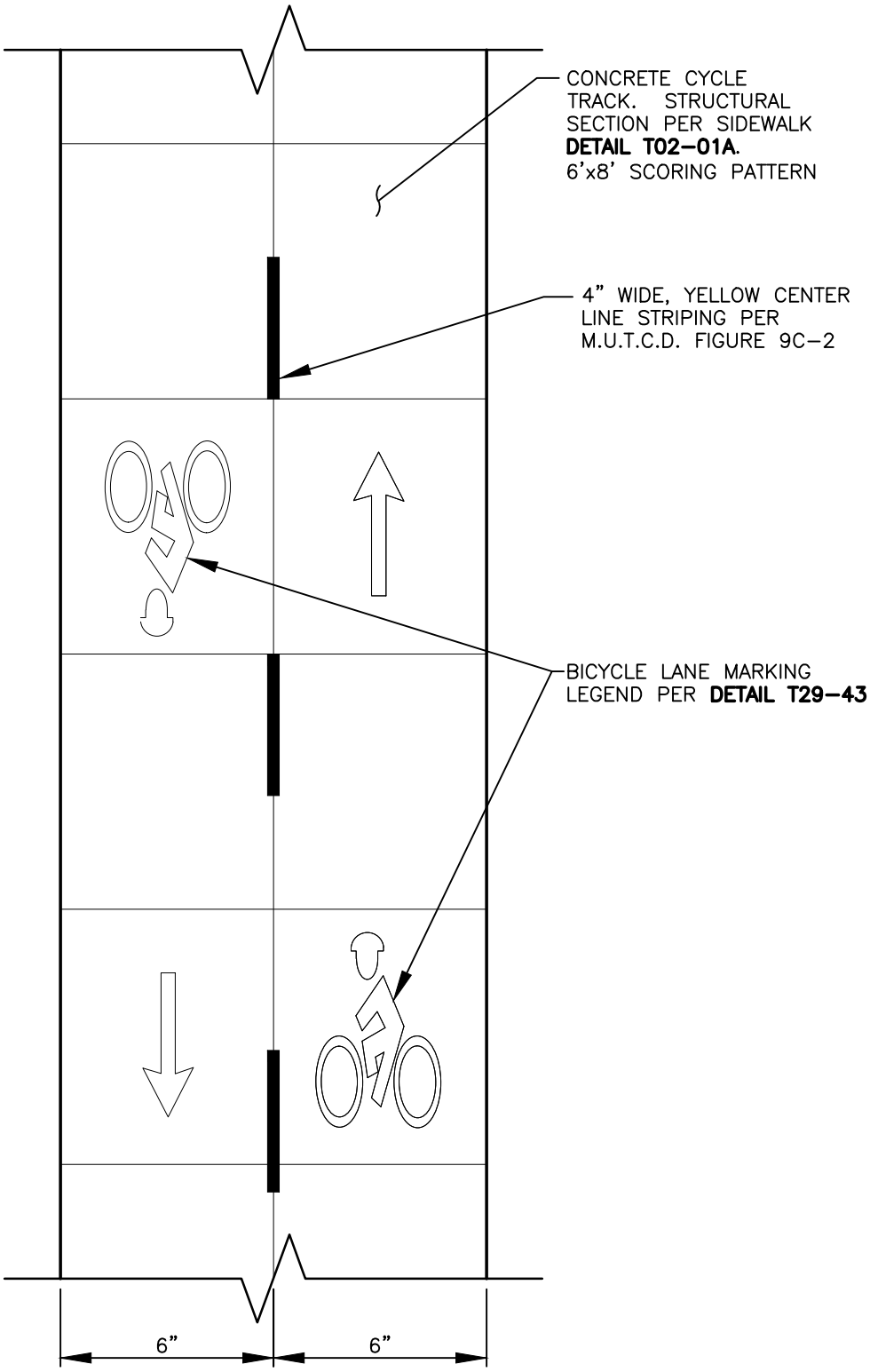

REV NO.	DATE	BY	APPR
1	9/21	RAW	CJC

PUBLIC WORKS – STREETS AND TRANSPORTATION

APPROVED BY: TRAFFIC ENGINEER MANAGER

APPROVED DATE: 9/1/2021

CITY OF Vancouver WASHINGTON

HEIGHTS DISTRICT REDEVELOPMENT CYCLE TRACK

STANDARD PLAN NUMBER

T08–32

I:\CITYAPPS\AUTOCAD\STD_DETAILS\DRAWING_FILES\T08–32

GENERAL NOTES:

1. BASE ROCK SHALL CONFORM TO WSDOT SPECIFICATION 9–03.9(3) FOR CRUSHED SURFACING BASE COURSE. ASPHALT TREATED BASE (ATB) MAY BE SUBSTITUTED FOR BASE ROCK. THE SUBSTITUTION RATIO SHALL BE 1" ATB=2" BASE ROCK.

2. HOT MIX ASPHALT FOR ARTERIAL ROADWAYS SHALL BE CLASS 3/8" PG 58H–22 3.0 TO 30 ESAL MIX DESIGN.

3. HOT MIX ASPHALT FOR LOCAL ACCESS/NEIGHBORHOOD CIRCULATORS AND LOOP ROADS SHALL BE CLASS 3/8" PG 58H–22 0.3 TO 3.0 ESAL MIX DESIGN.

4. IF A PROJECT HAS BOTH RESIDENTIAL AND ARTERIAL STREETS AND THE QUANTITY OF HMA IS LESS THAN 100 TONS FOR ONE OF THE STREET TYPES, THE MIX DESIGN OF THE STREET WITH MORE HMA MAY BE USED FOR ALL THE HMA.

5. SUGGESTED PAVEMENT DESIGNS ARE FOR PROLONGED DRY WEATHER CONSTRUCTION. ADDITIONAL MATERIALS AND/OR GEOTEXTILE FABRICS MAY BE REQUIRED DURING WET WEATHER CONSTRUCTION.

6. PRIOR TO PAVEMENT DESIGN, CONTACT PAVEMENT MANAGEMENT (PAVEMENT@CITYOFVANCOUVER.US) DEPARTMENT FOR DESIGN METHODOLOGY.

7. A PAVEMENT DESIGN REPORT WILL BE REQUIRED FOR ROADWAY PAVING EXCEEDING 2,000 S.F. OR IF A–7 SOIL IS AT SUBGRADE. THE PAVEMENT SECTIONS SHOWN ON T10–03 TO T10–23 ARE FOR ESTIMATING PURPOSES OR MINOR PAVING ACTIVITIES.

8. A PAVEMENT DESIGN REPORT SHALL BE DONE FOR ALL PCC AND PERVIOUS CONCRETE PAVEMENT CONSTRUCTION. THE REPORT SHALL BE STAMPED BY A LICENSED PROFESSIONAL ENGINEER.

9. ALL ARTERIAL, INDUSTRIAL, LOOP AND CUL–DE–SAC STREETS REQUIRE STREET LIGHTING, SEE STANDARD PLAN **T21–01A AND T21–01B CITY STREET LIGHTING REQUIREMENTS SCHEDULE AND NOTES**.

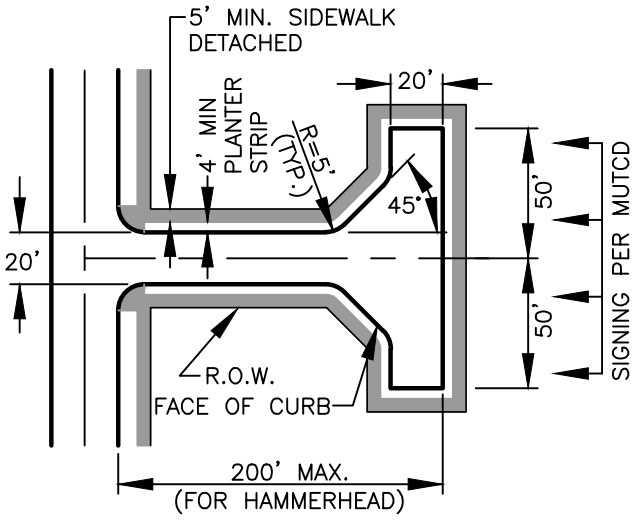

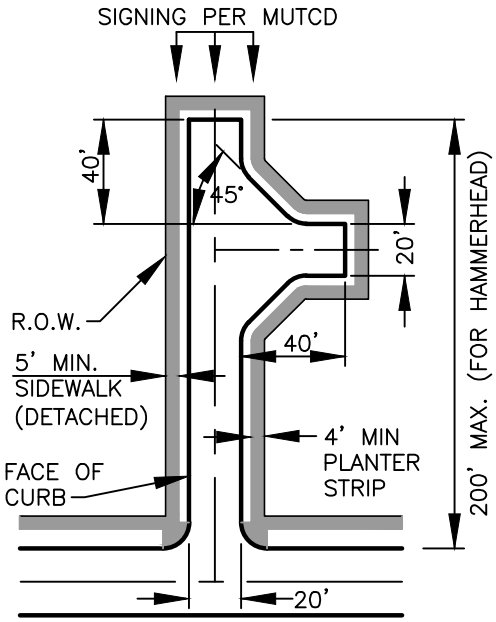

REDUCED HAMMERHEAD

NOTES:

1. THE PAVEMENT DESIGN SHALL BE PER VMC 11.80.050.
2. THE LENGTH OF A STREET TERMINATION IS MEASURED ALONG CENTERLINE FROM THE INTERSECTING STREET CURB LINE TO THE END OF STREET OR BACK OF HAMMERHEAD.
3. **NO PARKING SIGNS SHALL BE POSTED IN REDUCED HAMMERHEADS AND THE CURB PAINTED RED.**
4. A STREET OR ALLEY MAY BE TERMINATED ABRUPTLY WITH CURBING AND TYPE 3 BARRICADES WHEN LESS THAN 100 FT. LONG MAY BE ALLOWED WITH DIRECTOR'S APPROVAL.
5. SIDEWALK NOT REQUIRED IF PRIVATE STREET SERVES <5 LOTS.
6. ROLLED CURB ARE NOT ALLOWED WITH A REDUCED HAMMERHEAD.

REV NO.	DATE	BY	APPR
1	3/06	RAW	MHA
2	2/07	RAW	MHA
3	8/08	RAW	MHA
4	7/14	RAW	MHA
5	1/15	RAW	MHA
6	9/21	RWA	MHA

PUBLIC WORKS – STREETS AND TRANSPORTATION

APPROVED BY: M H Abdalla
ENGINEER MANAGER

APPROVED DATE: 9/1/2021

CITY OF Vancouver WASHINGTON

STREET TERMINATION FOR PERSONAL VEHICLES (NOT EMERGENCY VEHICLES)

STANDARD PLAN NUMBER

T10–01A

I:\CITYAPPS\AUTOCAD\STD_DETAILS\DRAWING_FILES\T10–01A

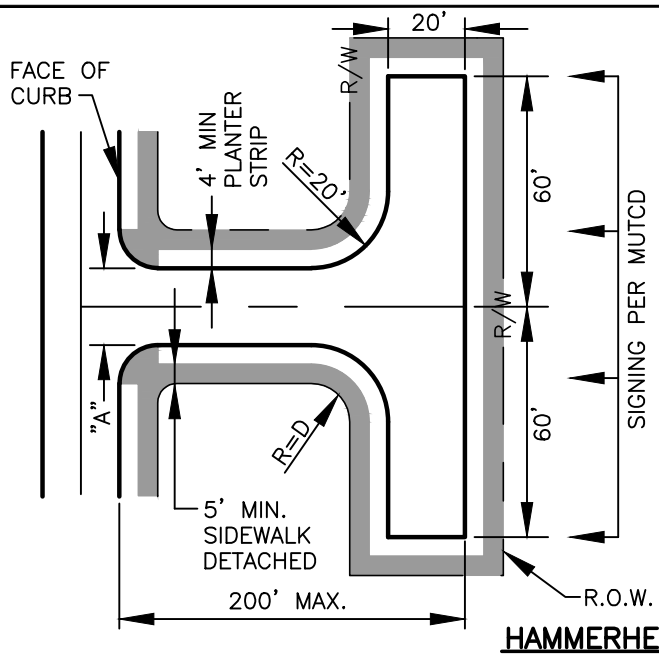

HAMMERHEAD

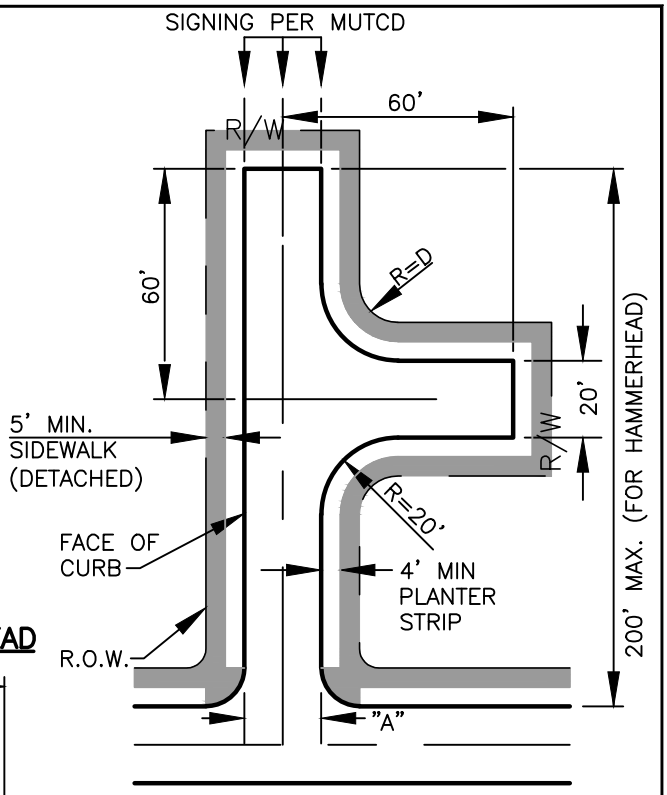

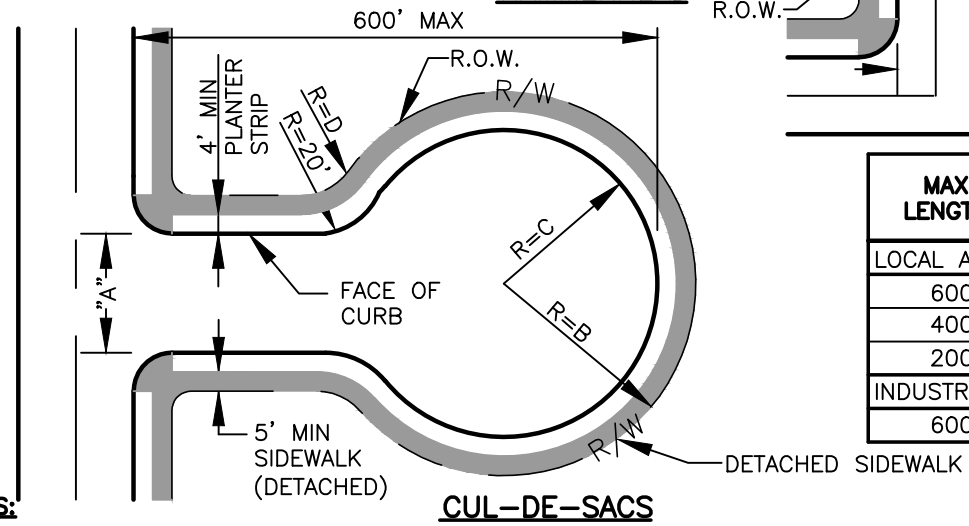

CUL-DE-SACS

MAX LENGTH	B	C	D
LOCAL ACCESS			
600'	54'	45'	10'
400'	44'	35'	10'
200'	36'	30'	10'
INDUSTRIAL			
600'	66'	60'	–

NOTES:

1. SIDEWALKS ARE REQUIRED ON BOTH SIDES AND THE ENDS OF PUBLIC STREETS THAT ARE TERMINATED, OR AS SHOWN ON THE APPROVED PLANS.
2. THE PAVEMENT DESIGN SHALL BE THE SAME AS THE CONNECTING STREET.
3. DIMENSION "A" (20' MIN.) IS FACE OF CURB TO FACE OF CURB OF THE CONNECTING STREET OR ALLEY.
4. ROLLED CURB IS ALLOWED WITHOUT A ROAD MODIFICATION IN A CUL-DE-SAC BULB.
5. IF ATTACHED SIDEWALK IS ALLOWED IN HAMMERHEADS OR DIMENSION "C" IS LESS THAN 45 FT. IN CUL-DE-SACS, THICKENED SIDEWALK (MIN. 6" DEPTH) WITH ROLLED CURB IS REQUIRED.
6. THE LENGTH OF A STREET TERMINATION IS MEASURED ALONG CENTERLINE FROM THE INTERSECTING STREET CURB LINE TO THE END OF STREET OR BACK OF TURN AROUND.
7. NO PARKING SIGNS SHALL BE POSTED IN ALL CUL-DE-SACS WHEN DIMENSION "B" IS LESS THAN 50 FT., AND IN ALL HAMMERHEADS.
8. A STREET OR ALLEY MAY BE TERMINATED ABRUPTLY WITH CURBING AND TYPE 3 BARRICADES WHEN LESS THAN 100 FT. LONG MAY BE ALLOWED WITH DIRECTOR'S APPROVAL.
9. PRIVATE ROAD TURN AROUND ADMINISTRATIVE POLICY – ALL PRIVATE ROADS, INFILL AND NON-INFILL
   - PRIVATE STREETS <200', ≤4 DWELLINGS, NO TURN AROUND REQUIRED.
   - PRIVATE STREETS <200', >4 DWELLINGS, REDUCED HAMMERHEAD MINIMUM (SEE **DETAIL T10-01A**).
   - PRIVATE STREETS >200' ≤400' UTILIZE A REDUCED RADIUS CUL-DE-SAC AT MINIMUM.
   - PRIVATE STREETS >400' UTILIZE AN APPROVED STANDARD TURN AROUND.
10. THE LENGTH OF A DEAD END STREET IS MEASURED FROM THE NEAREST STREET INTERSECTION.

REV NO.	DATE	BY	APPR
1	3/06	RAW	MHA
2	2/07	RAW	MHA
3	8/08	RAW	MHA
4	7/14	RAW	MHA
5	1/15	RAW	MHA
6	9/21	RAW	MHA

PUBLIC WORKS – STREETS AND TRANSPORTATION

APPROVED BY: M H Abdalla
ENGINEER MANAGER
APPROVED DATE: 9/1/2021

CITY OF Vancouver WASHINGTON

STREET TERMINATION

STANDARD PLAN NUMBER T10-01B

I:\CITYAPPS\AUTOCAD\STD_DETAILS\DRAWING_FILES\T10-01B

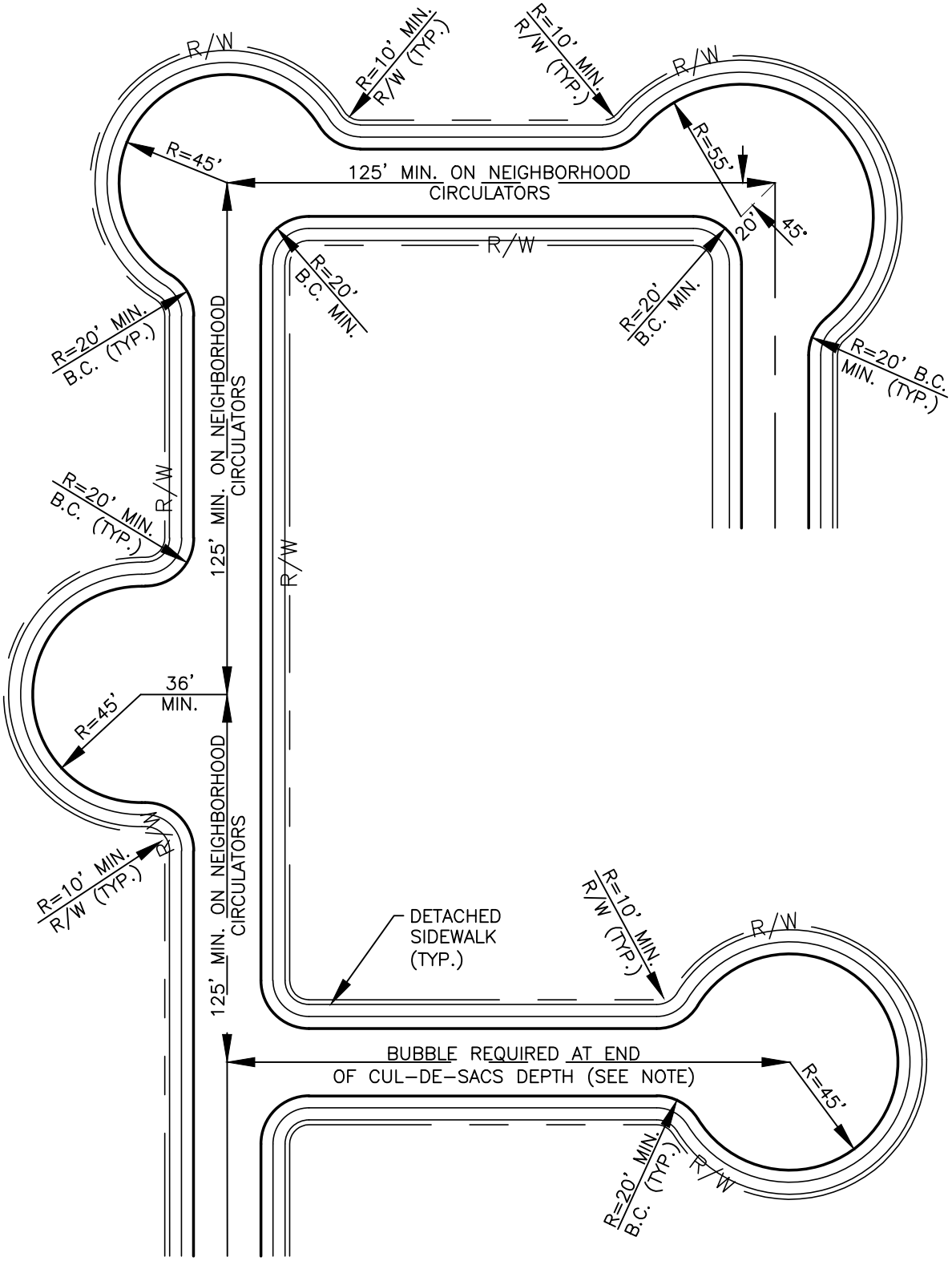

NOTES:

THE BUBBLE RADII SHOWN ON THIS FIGURE ARE FOR LOCAL RESIDENTIAL STREETS. RADII FOR CUL-DE-SAC BUBBLES FOR OTHER STREET CLASSIFICATIONS ARE SHOWN ON **STREET TERMINATION DETAIL T10-01A AND T10-01B**. THE USE OF BUBBLES (EXCEPT FOR A CUL-DE-SAC) ON OTHER THAN RESIDENTIAL STREETS MUST BE APPROVED BY A CITY DIRECTOR. RADII APPROPRIATE FOR THESE BUBBLES WILL BE ESTABLISHED AS PART OF THAT APPROVAL.

REV NO.	DATE	BY	APPR
1	8/04	RAW	MHA
2	3/06	RAW	MHA
3	2/07	RAW	MHA
4	8/08	RAW	MHA
5	7/14	RAW	MHA
6	9/21	RAW	MHA

PUBLIC WORKS – STREETS AND TRANSPORTATION

APPROVED BY: M H Abdalla
ENGINEER MANAGER

APPROVED DATE: 9/1/2021

CITY OF Vancouver WASHINGTON

BUBBLES FOR STREETS

STANDARD PLAN NUMBER

T10-02

I:\CITYAPPS\AUTOCAD\STD_DETAILS\DRAWING_FILES\T10-02

I:\CITYAPPS\AUTOCAD\STD_DETAILS\DRAWING_FILES\T10-03

REV NO.	DATE	BY	APPR
1	8/08	RAW	MHA
2	7/14	RAW	MHA
3	3/17	RAW	MHA
4	7/19	RAW	MHA
5	2/21	OIS	MHA
6	9/21	RAW	MHA

PUBLIC WORKS – STREETS AND TRANSPORTATION

APPROVED BY: ENGINEER / MANAGER

APPROVED DATE: 9/1/2021

CITY OF Vancouver WASHINGTON

LOCAL ACCESS AND LOOP ROAD HALF STREET CONSTRUCTION

STANDARD PLAN NUMBER T10-03

① SIDEWALK MAY BE MEANDERING WITH THE TRANSPORTATION MANAGER'S APPROVAL.

② ATTACHED SIDEWALK ALLOWED WITH THE TRANSPORTATION MANAGER'S APPROVAL WHEN DETACHED SIDEWALK IS NOT FEASIBLE.

③ DRAINAGE CAPACITY TO BE DESIGNED FOR FULL WIDTH STREET.

④ AN ADDITIONAL 5 FEET OF WIDTH IS REQUIRED IF MORE THAN FIVE LOTS ARE SERVED BY THIS STREET.

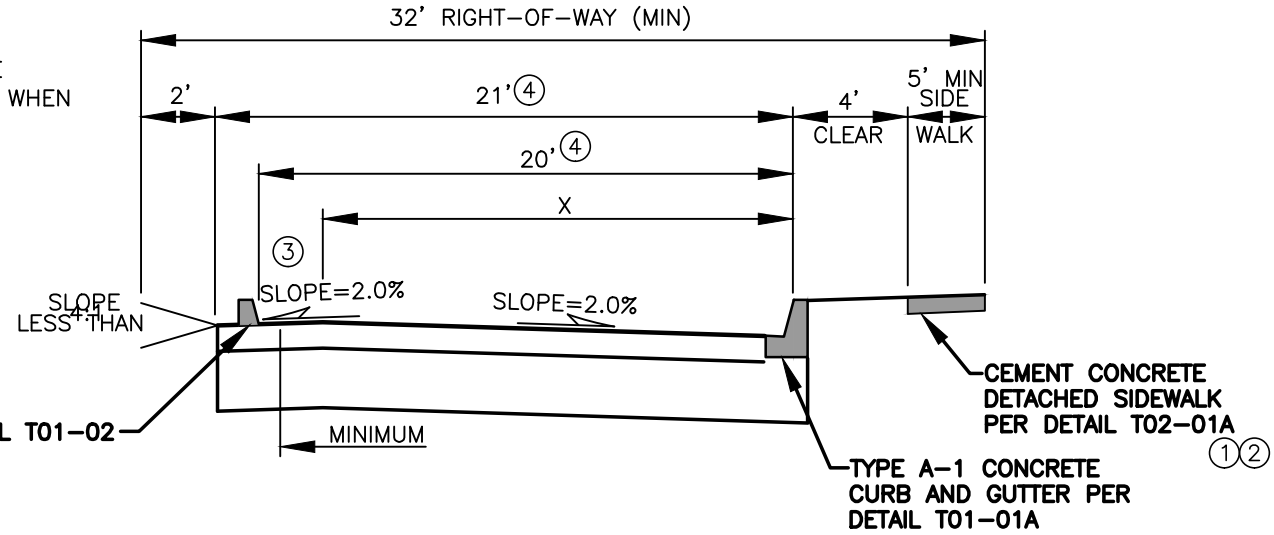

NEIGHBORHOOD CIRCULATOR/ NON RESIDENTIAL LOCAL ACCESS

AASHTO SOIL TYPE	ASPHALT THICKNESS	BASE ROCK THICKNESS
A-1 TO A-5	0.40'	0.85'
A-6	0.45'	1.00'
A-7	NO SECTION ESTIMATED	
OTHER	NO SECTION ESTIMATED	

RESIDENTIAL LOCAL ACCESS, LOOP CUL-DE-SAC

AASHTO SOIL TYPE	ASPHALT THICKNESS	BASE ROCK THICKNESS
A-1 TO A-5	0.40'	0.75'
A-6	0.45'	1.00'
A-7	0.35'	1.25'
OTHER	NO SECTION ESTIMATED	

	X FT.
NEIGHBORHOOD CIRCULATOR	18
LOCAL ACCESS/	16
LOOP AND CUL-DE-SAC (T4-16)	14

NOTES:

1. NO PARKING ALLOWED UNTIL THE PAVED WIDTH IS A MINIMUM 28 FEET.
2. WHEN EXTENDING AN EXISTING HALF WIDTH ROADWAY SAWCUT A MINIMUM 1 FOOT BACK INTO EXISTING ACP FOR EXTENSION (OR 1 FOOT BACK OF TEMPORARY CURB.
3. SEE STANDARD PLAN T10-00 FOR GENERAL NOTES.

I:\CITYAPPS\AUTOCAD\STD_DETAILS\DRAWING_FILES\T10-04

REV NO.	DATE	BY	APPR
1	7/14	RAW	MHA
2	3/16	RAW	MHA
3	3/17	RAW	MHA
4	7/19	RAW	MHA
5	2/21	OIS	MHA
6	9/21	RAW	MHA

PUBLIC WORKS – STREETS AND TRANSPORTATION

APPROVED BY: ENGINEER MANAGER

APPROVED DATE: 9/1/2021

CITY OF Vancouver WASHINGTON

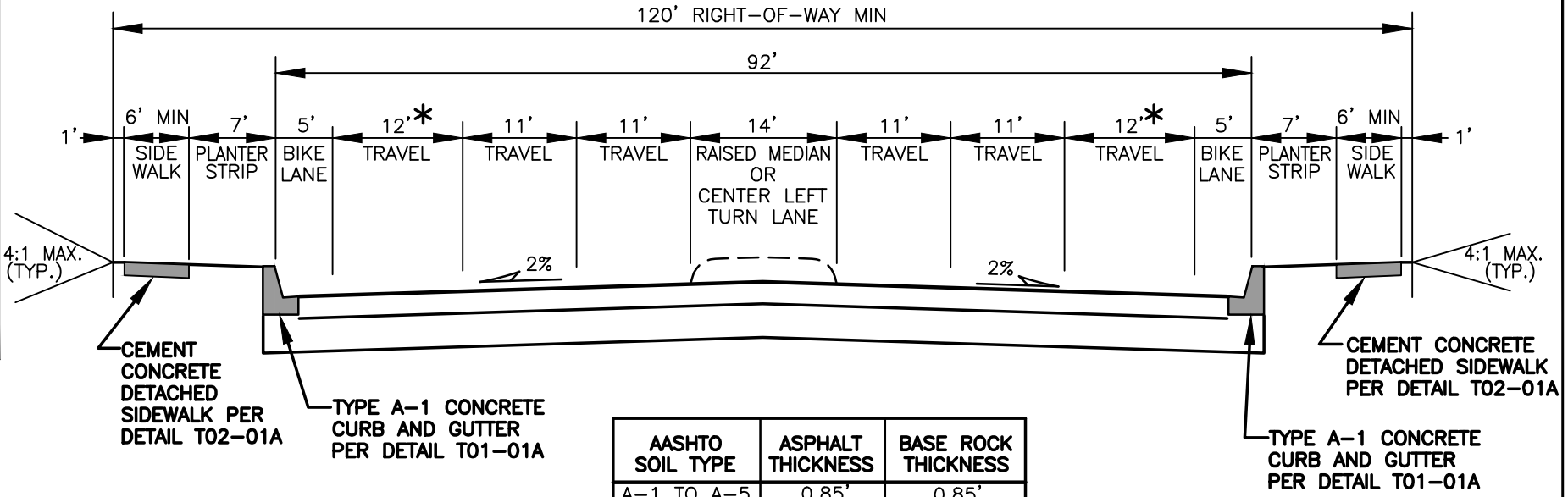

AASHTO SOIL TYPE	ASPHALT THICKNESS	BASE ROCK THICKNESS
A-1 TO A-5	0.85'	0.85'
A-6	0.90'	1.25'
A-7	NO SECTION ESTIMATED	
OTHER	NO SECTION ESTIMATED	

NOTES:

1. MEANDERING SIDEWALKS MAY BE ALLOWED WITH THE DIRECTOR'S APPROVAL.
2. WIDER SIDEWALKS MAY BE REQUIRED UNDER SPECIAL CIRCUMSTANCES.
3. SEE STANDARD PLAN T10-00 FOR GENERAL NOTES.

* TRAVEL LANE MAY BE REDUCED TO 11' MINIMUM TO ACCOMMODATE 6' BIKE LANE WHEN CURB AND GUTTER (A-1) IS USED.

6-LANE PRINCIPAL ARTERIAL WITH CENTER LEFT-TURN AND BIKE LANES

STANDARD PLAN NUMBER

T10-04

I:\CITYAPPS\AUTOCAD\STD_DETAILS\DRAWING_FILES\T10-05

REV NO.	DATE	BY	APPR
1	8/08	RAW	MHA
2	3/16	RAW	MHA
3	3/17	RAW	MHA
4	7/19	RAW	MHA
5	2/21	OIS	MHA
6	9/21	RAW	MHA

PUBLIC WORKS – STREETS AND TRANSPORTATION

APPROVED BY: ENGINEER MANAGER

APPROVED DATE: 9/1/2021

CITY OF Vancouver WASHINGTON

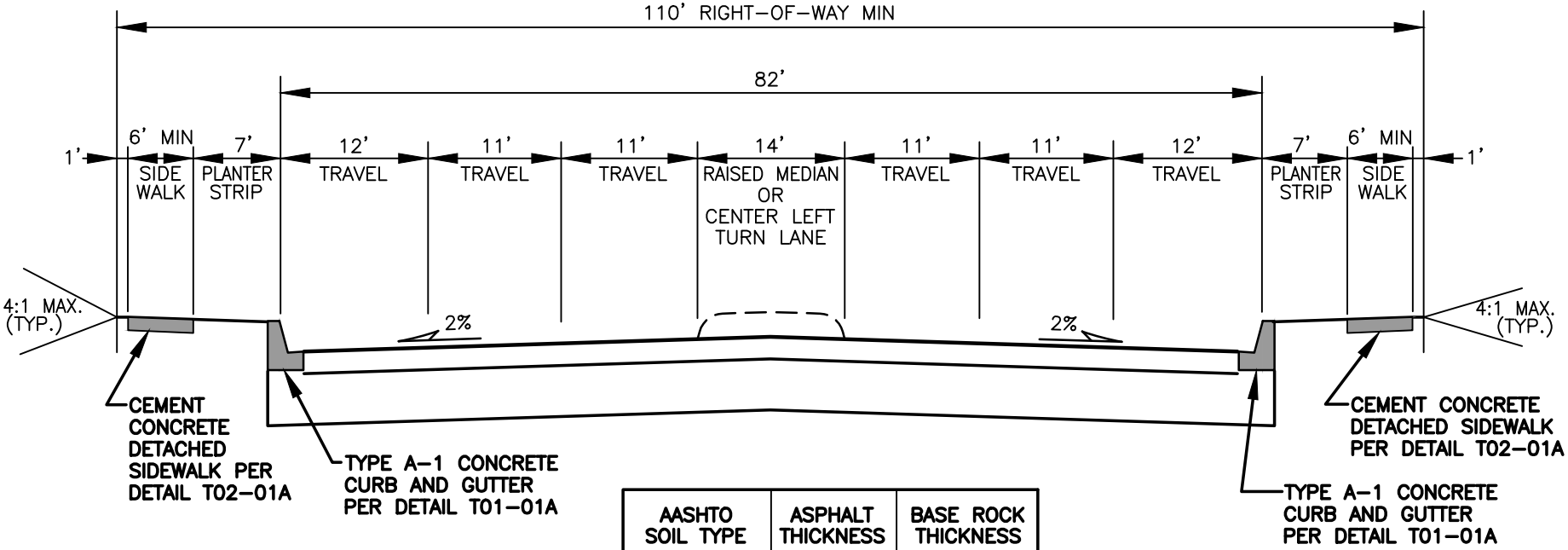

AASHTO SOIL TYPE	ASPHALT THICKNESS	BASE ROCK THICKNESS
A-1 TO A-5	0.85'	0.85'
A-6	0.90'	1.25'
A-7	NO SECTION ESTIMATED	
OTHER	NO SECTION ESTIMATED	

NOTES:

1. MEANDERING SIDEWALKS MAY BE ALLOWED WITH THE DIRECTOR'S APPROVAL.
2. WIDER SIDEWALKS MAY BE REQUIRED UNDER SPECIAL CIRCUMSTANCES.
3. SEE STANDARD PLAN T10-00 FOR GENERAL NOTES.

6-LANE PRINCIPAL ARTERIAL WITH CENTER LEFT-TURN LANE

STANDARD PLAN NUMBER

T10-05

I:\CITYAPPS\AUTOCAD\STD_DETAILS\DRAWING_FILES\T10-06

REV NO.	DATE	BY	APPR
1	7/14	RAW	MHA
2	3/16	RAW	MHA
3	3/17	RAW	MHA
4	7/19	RAW	MHA
5	2/21	OIS	MHA
6	9/21	RAW	MHA

PUBLIC WORKS – STREETS AND TRANSPORTATION

APPROVED BY: ENGINEER MANAGER

APPROVED DATE: 9/1/2021

CITY OF Vancouver WASHINGTON

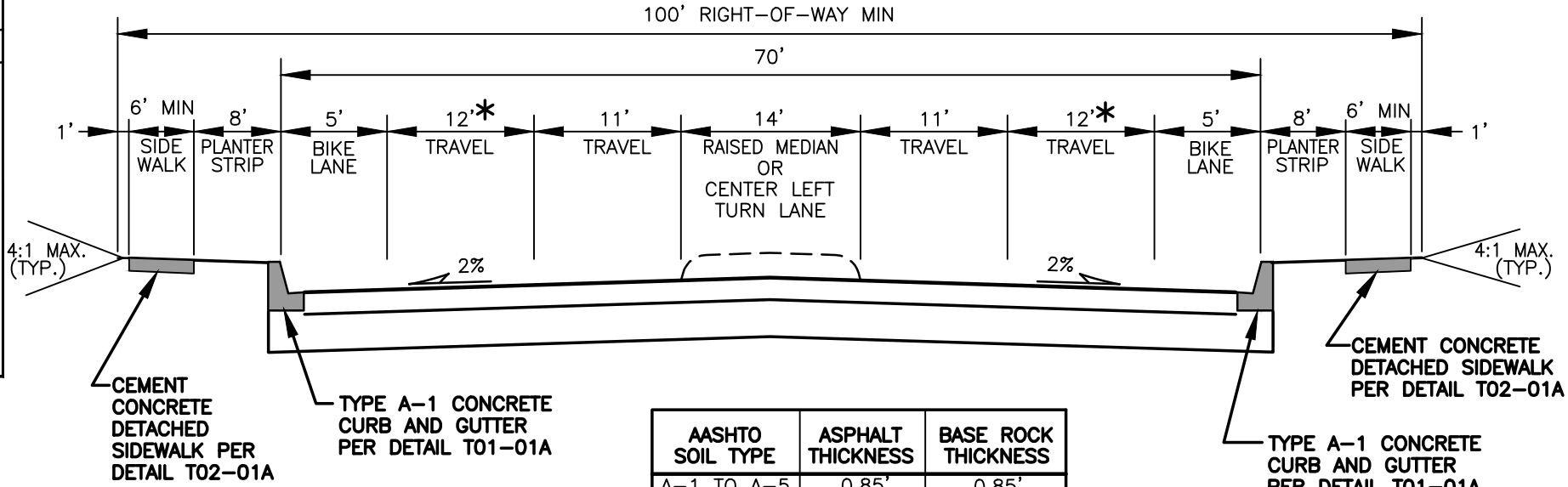

AASHTO SOIL TYPE	ASPHALT THICKNESS	BASE ROCK THICKNESS
A-1 TO A-5	0.85'	0.85'
A-6	0.90'	1.25'
A-7	NO SECTION ESTIMATED	
OTHER	NO SECTION ESTIMATED	

NOTES:

1. MEANDERING SIDEWALKS MAY BE ALLOWED WITH THE DIRECTOR'S APPROVAL.
2. WIDER SIDEWALKS MAY BE REQUIRED UNDER SPECIAL CIRCUMSTANCES.
3. SEE STANDARD PLAN T10-00 FOR GENERAL NOTES.

* TRAVEL LANE MAY BE REDUCED TO 11' MINIMUM TO ACCOMMODATE 6' BIKE LANE WHEN CURB AND GUTTER (A-1) IS USED.

4-LANE PRINCIPAL ARTERIAL WITH CENTER LEFT-TURN LANE AND BIKE LANES

STANDARD PLAN NUMBER

T10-06

I:\CITYAPPS\AUTOCAD\STD_DETAILS\DRAWING_FILES\T10-07

REV NO.	DATE	BY	APPR
1	8/08	RAW	MHA
2	7/14	RAW	MHA
3	3/17	RAW	MHA
4	7/19	RAW	MHA
5	2/21	OIS	MHA
6	9/21	RAW	MHA

PUBLIC WORKS – STREETS AND TRANSPORTATION

APPROVED BY: ENGINEER MANAGER

APPROVED DATE: 9/1/2021

CITY OF Vancouver WASHINGTON

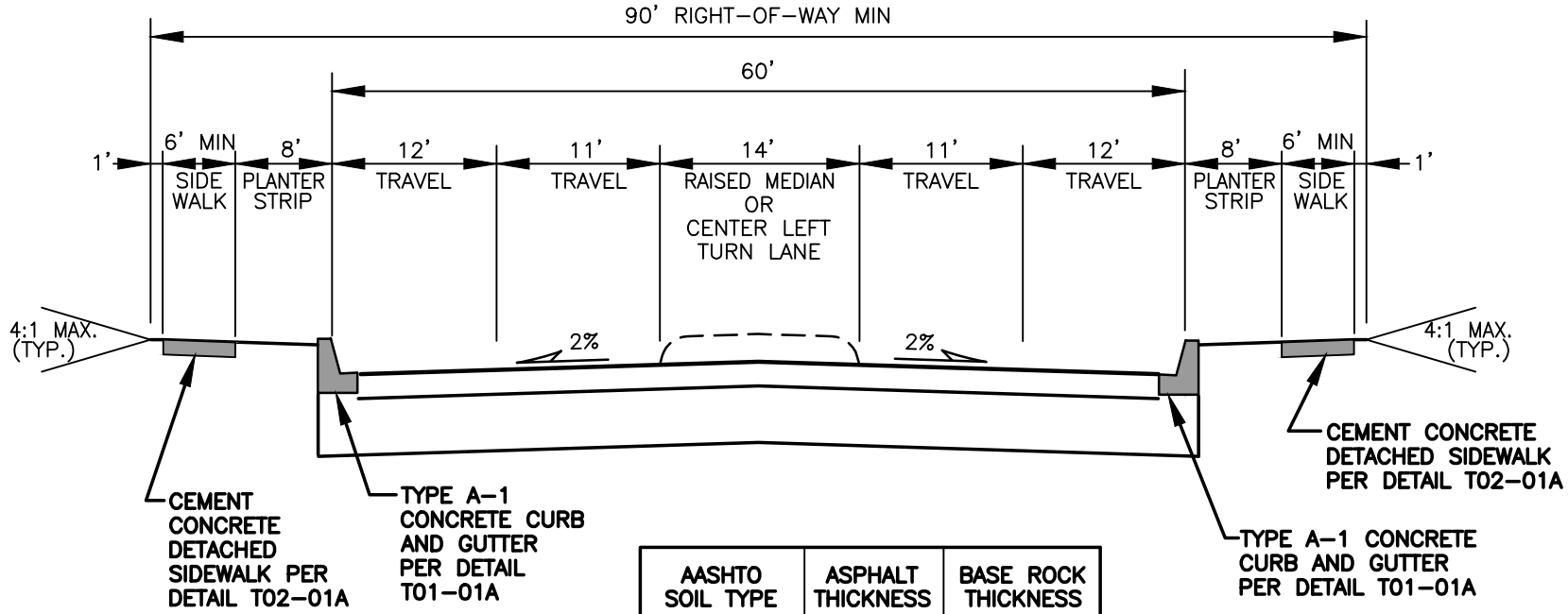

AASHTO SOIL TYPE	ASPHALT THICKNESS	BASE ROCK THICKNESS
A-1 TO A-5	0.85'	0.85'
A-6	0.90'	1.25'
A-7	NO SECTION ESTIMATED	
OTHER	NO SECTION ESTIMATED	

NOTES:

1. MEANDERING SIDEWALKS MAY BE ALLOWED WITH THE DIRECTOR'S APPROVAL.
2. WIDER SIDEWALKS MAY BE REQUIRED UNDER SPECIAL CIRCUMSTANCES.
3. SEE STANDARD PLAN T10-00 FOR GENERAL NOTES.

4-LANE PRINCIPAL ARTERIAL WITH CENTER CENTER LEFT-TURN LANE

STANDARD PLAN NUMBER

T10-07

I:\CITYAPPS\AUTOCAD\STD_DETAILS\DRAWING_FILES\T10-08

REV NO.	DATE	BY	APPR
1	7/14	RAW	MHA
2	3/16	RAW	MHA
3	3/17	RAW	MHA
4	7/19	RAW	MHA
5	2/21	OIS	MHA
6	9/21	RAW	MHA

PUBLIC WORKS – STREETS AND TRANSPORTATION

APPROVED BY: ENGINEER MANAGER

APPROVED DATE: 9/1/2021

CITY OF Vancouver WASHINGTON

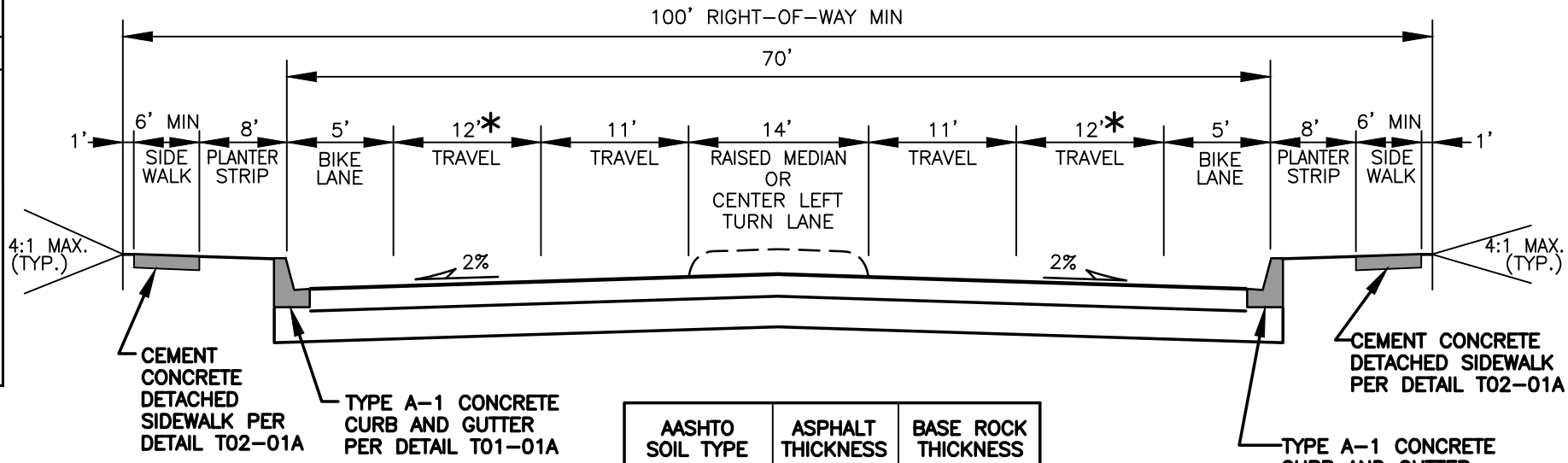

AASHTO SOIL TYPE	ASPHALT THICKNESS	BASE ROCK THICKNESS
A-1 TO A-5	0.75'	0.85'
A-6	0.80'	1.25'
A-7	NO SECTION ESTIMATED	
OTHER	NO SECTION ESTIMATED	

NOTES:

1. MEANDERING SIDEWALKS MAY BE ALLOWED WITH THE DIRECTOR'S APPROVAL.
2. WIDER SIDEWALKS MAY BE REQUIRED UNDER SPECIAL CIRCUMSTANCES.
3. SEE STANDARD PLAN T10-00 FOR GENERAL NOTES.

* TRAVEL LANE MAY BE REDUCED TO 11' MINIMUM TO ACCOMMODATE 6' BIKE LANE WHEN CURB AND GUTTER (A-1) IS USED.

4-LANE MINOR ARTERIAL WITH CENTER LEFT-TURN LANE AND BIKE LANES

STANDARD PLAN NUMBER T10-08

I:\CITYAPPS\AUTOCAD\STD_DETAILS\DRAWING_FILES\T10-08A

REV NO.	DATE	BY	APPR
1	3/13	RAW	MHA
2	7/14	RAW	MHA
3	3/17	RAW	MHA
4	7/19	RAW	MHA
5	2/21	OIS	MHA
6	9/21	RAW	MHA

PUBLIC WORKS – STREETS AND TRANSPORTATION

APPROVED BY: ENGINEER/MANAGER

APPROVED DATE: 9/1/2021

CITY OF Vancouver WASHINGTON

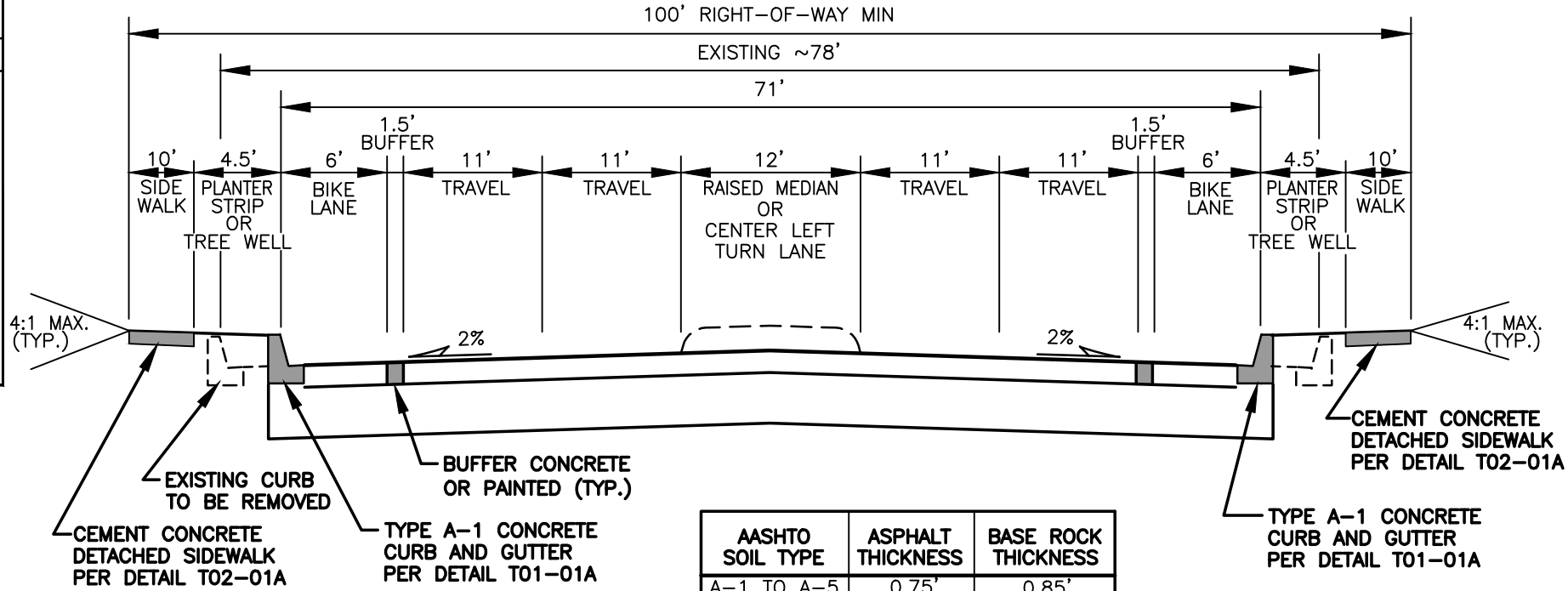

AASHTO SOIL TYPE	ASPHALT THICKNESS	BASE ROCK THICKNESS
A-1 TO A-5	0.75'	0.85'
A-6	0.80'	1.25'
A-7	NO SECTION ESTIMATED	
OTHER	NO SECTION ESTIMATED	

NOTES:

1. MEANDERING SIDEWALKS MAY BE ALLOWED WITH THE DIRECTOR'S APPROVAL.
2. WIDER SIDEWALKS MAY BE REQUIRED UNDER SPECIAL CIRCUMSTANCES.
3. THIS TYPICAL SECTION IS INTENDED TO COMPLIMENT THE ADOPTED CENTRAL PARK SUBAREA PLAN AND TITLE 20 VMC 20.640.050, WHICH SETS "GREAT STREET" PEDESTRIAN/BIKE SAFETY AND ACCESS POLICY AND DESIGN GUIDELINES.
4. SEE STANDARD PLAN T10-00 FOR GENERAL NOTES.

FORT VANCOUVER WAY - CAMPUS STREET STANDARD (McLOUGHLIN TO FOURTH PLAIN)

STANDARD PLAN NUMBER T10-08A

I:\CITYAPPS\AUTOCAD\STD_DETAILS\DRAWING_FILES\T10-09

REV NO.	DATE	BY	APPR
1	8/08	RAW	MHA
2	7/14	RAW	MHA
3	3/17	RAW	MHA
4	7/19	RAW	MHA
5	2/21	OIS	MHA
6	9/21	RAW	MHA

PUBLIC WORKS – STREETS AND TRANSPORTATION

APPROVED BY: ENGINEER/MANAGER

APPROVED DATE: 9/1/2021

CITY OF Vancouver WASHINGTON

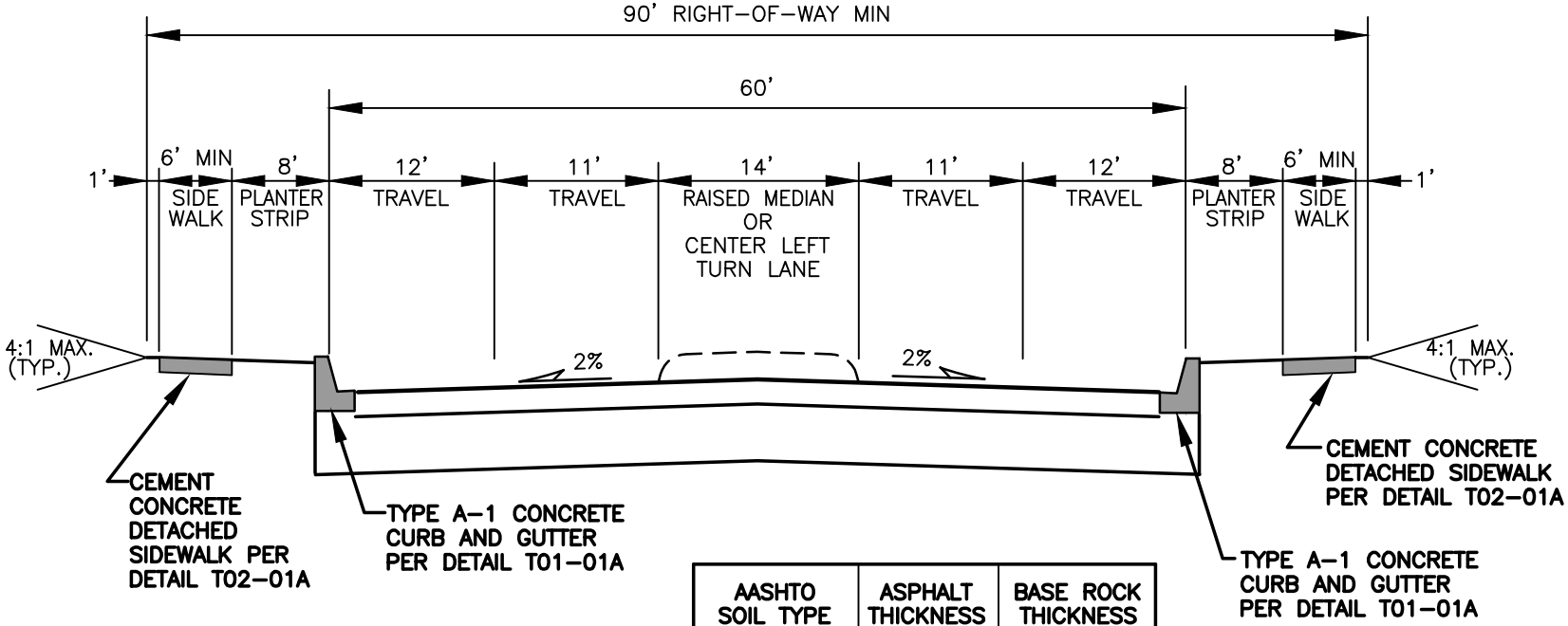

AASHTO SOIL TYPE	ASPHALT THICKNESS	BASE ROCK THICKNESS
A-1 TO A-5	0.75'	0.85'
A-6	0.80'	1.25'
A-7	NO SECTION ESTIMATED	
OTHER	NO SECTION ESTIMATED	

NOTES:

1. MEANDERING SIDEWALKS MAY BE ALLOWED WITH THE DIRECTOR'S APPROVAL.
2. WIDER SIDEWALKS MAY BE REQUIRED UNDER SPECIAL CIRCUMSTANCES.
3. SEE STANDARD PLAN PLAN T10-00 FOR GENERAL NOTES.

4-LANE MINOR ARTERIAL WITH CENTER LEFT-TURN LANE

STANDARD PLAN NUMBER T10-09

I:\CITYAPPS\AUTOCAD\STD_DETAILS\DRAWING_FILES\T10-10

REV NO.	DATE	BY	APPR
1	7/14	RAW	MHA
2	3/16	RAW	MHA
3	3/17	RAW	MHA
4	7/19	RAW	MHA
5	2/21	OIS	MHA
6	9/21	RAW	MHA

PUBLIC WORKS – STREETS AND TRANSPORTATION

APPROVED BY: ENGINEER MANAGER

APPROVED DATE: 9/1/2021

CITY OF Vancouver WASHINGTON

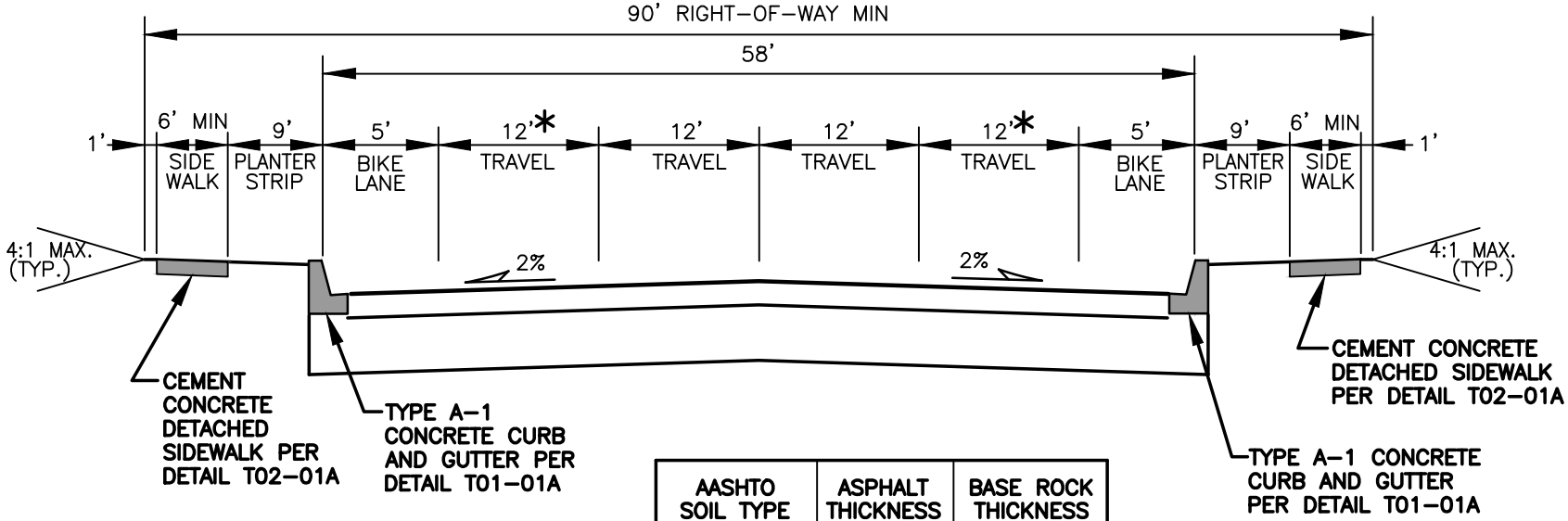

AASHTO SOIL TYPE	ASPHALT THICKNESS	BASE ROCK THICKNESS
A-1 TO A-5	0.75'	0.85'
A-6	0.80'	1.25'
A-7	NO SECTION ESTIMATED	
OTHER	NO SECTION ESTIMATED	

NOTES:

1. MEANDERING SIDEWALKS MAY BE ALLOWED WITH THE DIRECTOR'S APPROVAL.
2. WIDER SIDEWALKS MAY BE REQUIRED UNDER SPECIAL CIRCUMSTANCES.
3. SEE STANDARD PLAN T10-00 FOR GENERAL NOTES.

* TRAVEL LANE MAY BE REDUCED TO 11' MINIMUM TO ACCOMMODATE 6' BIKE LANE WHEN CURB AND GUTTER (A-1) IS USED.

4-LANE MINOR ARTERIAL WITH BIKE LANES

STANDARD PLAN NUMBER

T10-10

I:\CITYAPPS\AUTOCAD\STD_DETAILS\DRAWING_FILES\T10-11

REV NO.	DATE	BY	APPR
1	8/08	RAW	MHA
2	7/14	RAW	MHA
3	3/17	RAW	MHA
4	7/19	RAW	MHA
5	2/21	OIS	MHA
6	9/21	RAW	MHA

PUBLIC WORKS – STREETS AND TRANSPORTATION

APPROVED BY: ENGINEER MANAGER

APPROVED DATE: 9/1/2021

CITY OF Vancouver WASHINGTON

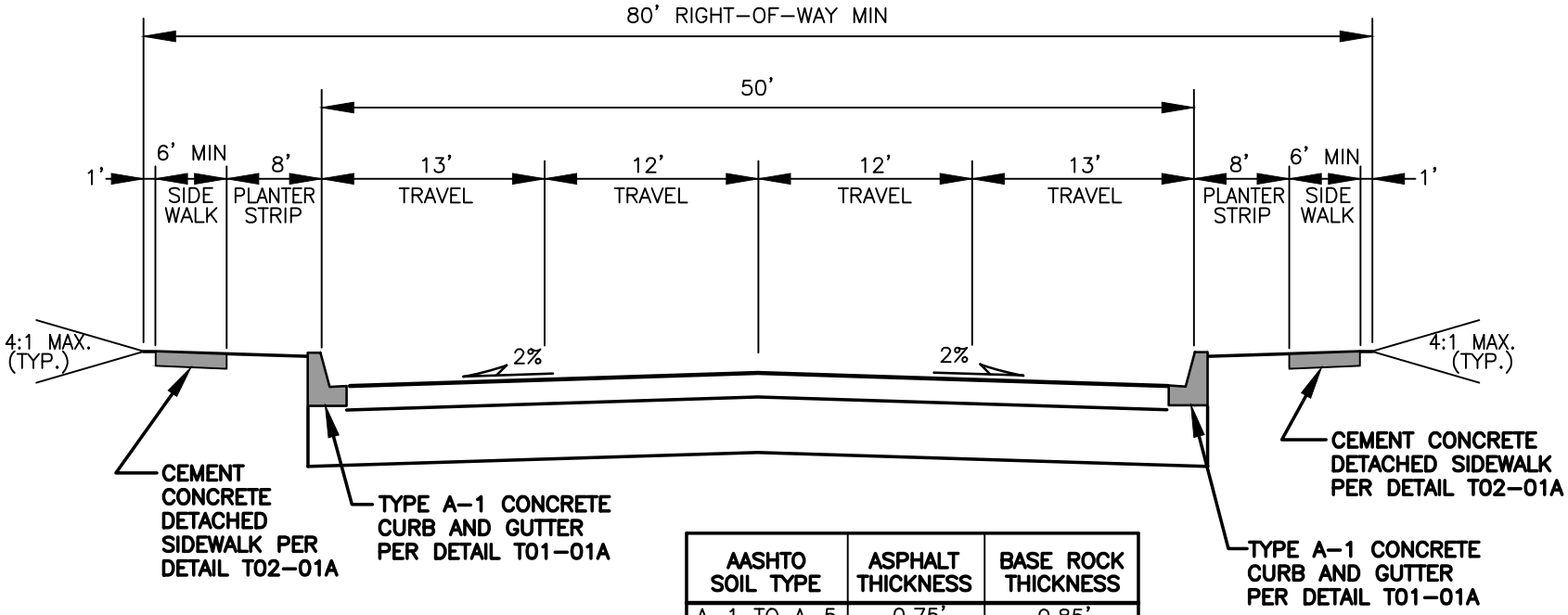

AASHTO SOIL TYPE	ASPHALT THICKNESS	BASE ROCK THICKNESS
A-1 TO A-5	0.75'	0.85'
A-6	0.80'	1.25'
A-7	NO SECTION ESTIMATED	
OTHER	NO SECTION ESTIMATED	

NOTES:

1. MEANDERING SIDEWALKS MAY BE ALLOWED WITH THE DIRECTOR'S APPROVAL.
2. WIDER SIDEWALKS MAY BE REQUIRED UNDER SPECIAL CIRCUMSTANCES.
3. SEE STANDARD PLAN T10-00 FOR GENERAL NOTES.

4-LANE MINOR ARTERIAL

STANDARD PLAN NUMBER

T10-11

I:\CITYAPPS\AUTOCAD\STD_DETAILS\DRAWING_FILES\T10-12

REV NO.	DATE	BY	APPR
1	8/08	RAW	MHA
2	7/14	RAW	MHA
3	3/17	RAW	MHA
4	7/19	RAW	MHA
5	2/21	OIS	MHA
6	9/21	RAW	MHA

PUBLIC WORKS – STREETS AND TRANSPORTATION

APPROVED BY: ENGINEER / MANAGER

APPROVED DATE: 9/1/2021

CITY OF Vancouver WASHINGTON

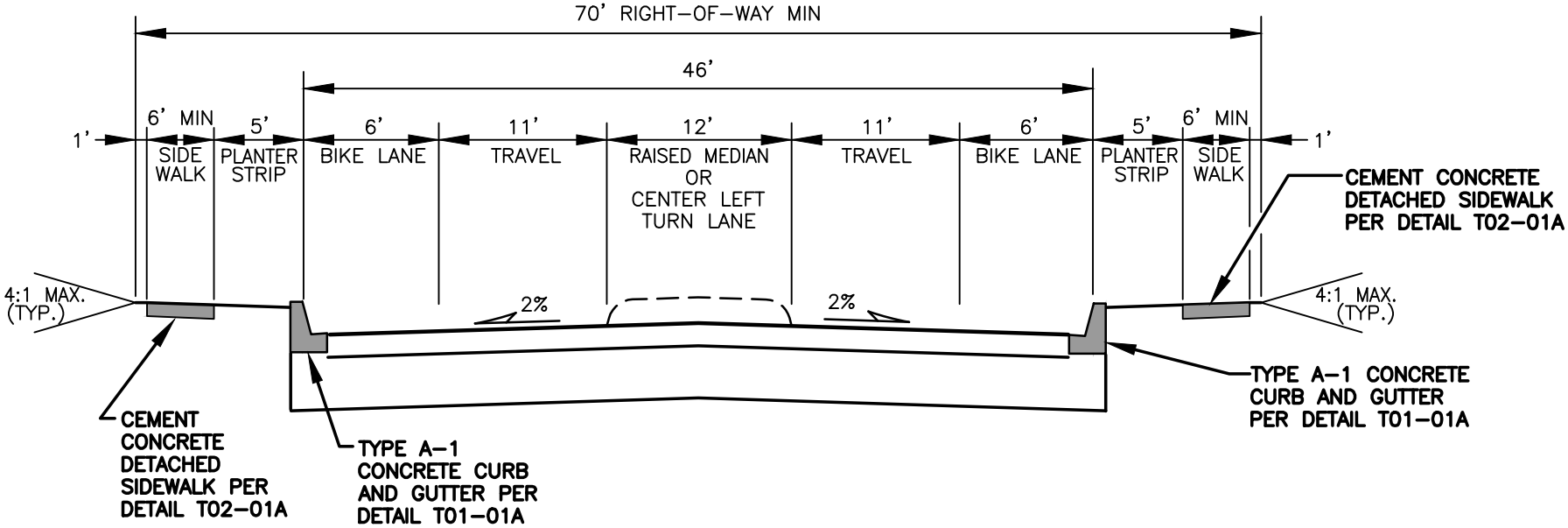

MINOR ARTERIAL

AASHTO SOIL TYPE	ASPHALT THICKNESS	BASE ROCK THICKNESS
A-1 TO A-5	0.75'	0.85'
A-6	0.80'	1.25'
A-7	NO SECTION ESTIMATED	
OTHER	NO SECTION ESTIMATED	

COLLECTOR

AASHTO SOIL TYPE	ASPHALT THICKNESS	BASE ROCK THICKNESS
A-1 TO A-5	0.60'	0.65'
A-6	0.60'	1.25'
A-7	NO SECTION ESTIMATED	
OTHER	NO SECTION ESTIMATED	

NOTES:

1. MEANDERING SIDEWALKS MAY BE ALLOWED WITH THE DIRECTOR'S APPROVAL.
2. WIDER SIDEWALKS MAY BE REQUIRED UNDER SPECIAL CIRCUMSTANCES.
3. SEE STANDARD PLAN T10-00 FOR GENERAL NOTES.

3-LANE COLLECTOR/ MINOR ARTERIAL WITH BIKE LANES

STANDARD PLAN NUMBER

T10-12

I:\CITYAPPS\AUTOCAD\STD_DETAILS\DRAWING_FILES\T10-13

REV NO.	DATE	BY	APPR
1	8/08	RAW	MHA
2	7/14	RAW	MHA
3	3/17	RAW	MHA
4	7/19	RAW	MHA
5	2/21	OIS	MHA
6	9/21	RAW	MHA

PUBLIC WORKS – STREETS AND TRANSPORTATION

APPROVED BY: ENGINEER/MANAGER

APPROVED DATE: 9/1/2021

CITY OF Vancouver WASHINGTON

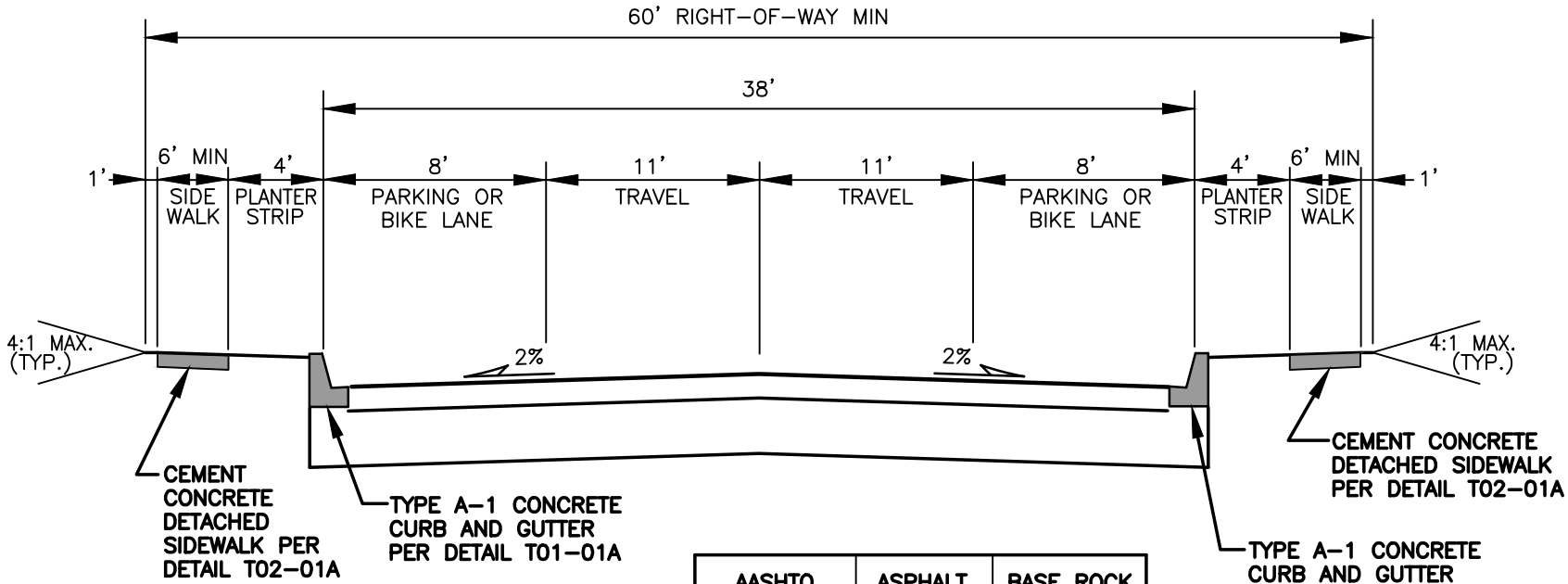

AASHTO SOIL TYPE	ASPHALT THICKNESS	BASE ROCK THICKNESS
A-1 TO A-5	0.60'	0.65'
A-6	0.60'	1.25'
A-7	NO SECTION ESTIMATED	
OTHER	NO SECTION ESTIMATED	

NOTES:

1. MEANDERING SIDEWALKS MAY BE ALLOWED WITH THE DIRECTOR'S APPROVAL.
2. WIDER SIDEWALKS MAY BE REQUIRED UNDER SPECIAL CIRCUMSTANCES.
3. SEE STANDARD PLAN T10-00 FOR GENERAL NOTES.

2-LANE COLLECTOR/ MINOR ARTERIAL

STANDARD PLAN NUMBER

T10-13

I:\CITYAPPS\AUTOCAD\STD_DETAILS\DRAWING_FILES\T10-14

REV NO.	DATE	BY	APPR
1	8/08	RAW	MHA
2	7/14	RAW	MHA
3	3/17	RAW	MHA
4	7/19	RAW	MHA
5	2/21	OIS	MHA
6	9/21	RAW	MHA

PUBLIC WORKS – STREETS AND TRANSPORTATION

APPROVED BY: ENGINEER MANAGER

APPROVED DATE: 9/1/2021

CITY OF Vancouver WASHINGTON

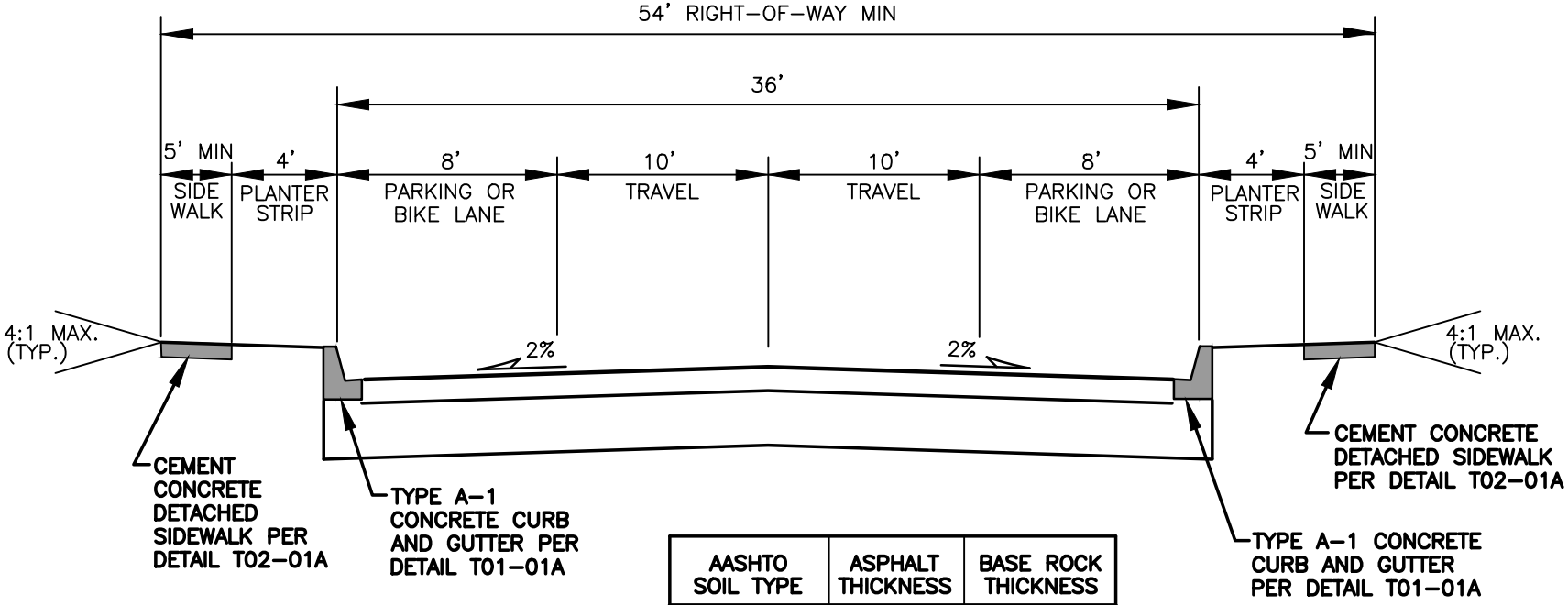

AASHTO SOIL TYPE	ASPHALT THICKNESS	BASE ROCK THICKNESS
A-1 TO A-5	0.40'	0.85'
A-6	0.45'	1.00'
A-7	NO SECTION ESTIMATED	
OTHER	NO SECTION ESTIMATED	

NOTES:

1. MEANDERING SIDEWALKS MAY BE ALLOWED WITH THE DIRECTOR'S APPROVAL.
2. WIDER SIDEWALKS MAY BE REQUIRED UNDER SPECIAL CIRCUMSTANCES.
3. SEE STANDARD PLAN T10-00 FOR GENERAL NOTES.

NEIGHBORHOOD CIRCULATOR
NON RESIDENTIAL
LOCAL ACCESS

STANDARD PLAN NUMBER

T10-14

I:\CITYAPPS\AUTOCAD\STD_DETAILS\DRAWING_FILES\T10-15A

REV NO.	DATE	BY	APPR
1	8/08	RAW	MHA
2	7/14	RAW	MHA
3	3/17	RAW	MHA
4	7/19	RAW	MHA
5	2/21	OIS	MHA
6	9/21	RAW	MHA

PUBLIC WORKS – STREETS AND TRANSPORTATION

APPROVED BY: ENGINEER MANAGER

APPROVED DATE: 9/1/2021

CITY OF Vancouver WASHINGTON

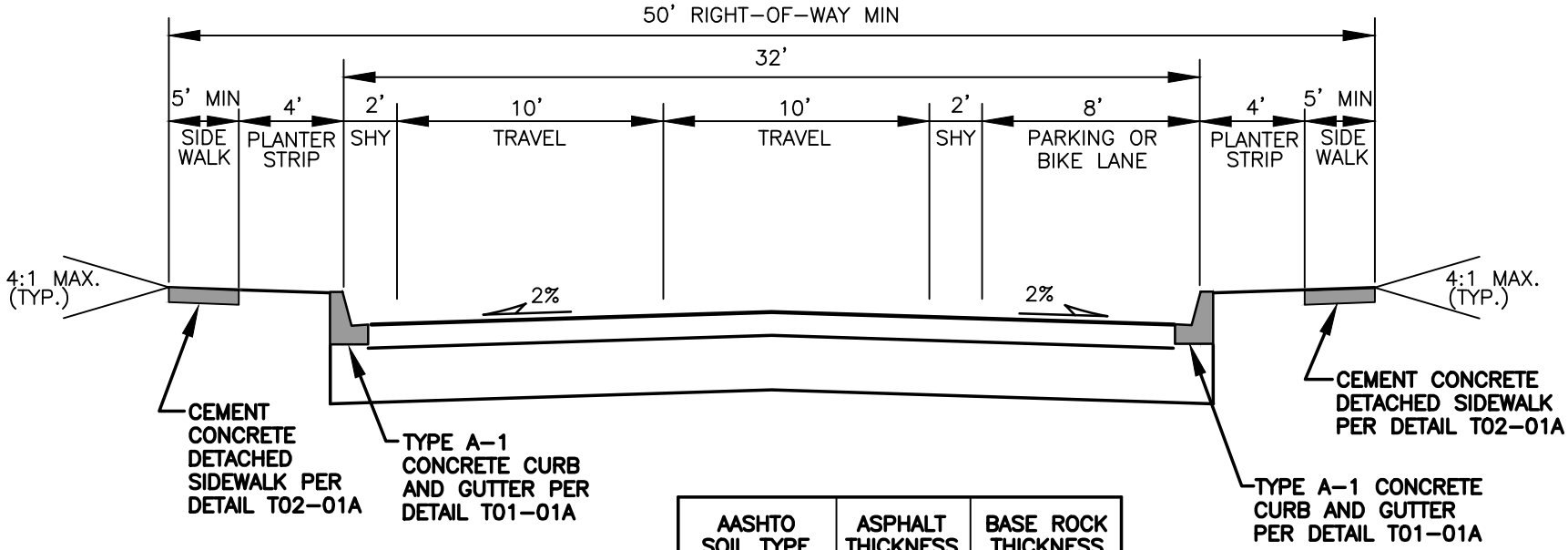

AASHTO SOIL TYPE	ASPHALT THICKNESS	BASE ROCK THICKNESS
A-1 TO A-5	0.40'	0.75'
A-6	0.45'	1.00'
A-7	NO SECTION ESTIMATED	
OTHER	NO SECTION ESTIMATED	

FOR NON RESIDENTIAL LOCAL ACCESS, SEE T10-14

NOTES:

1. MEANDERING SIDEWALKS MAY BE ALLOWED WITH THE DIRECTOR'S APPROVAL.
2. WIDER SIDEWALKS MAY BE REQUIRED UNDER SPECIAL CIRCUMSTANCES.
3. PARKING RESTRICTED TO ONE SIDE ONLY.
4. SEE STANDARD PLAN T10-00 FOR GENERAL NOTES.

LOCAL ACCESS OPTION A (32' ROADWAY WIDTH)

STANDARD PLAN NUMBER

T10-15A

I:\CITYAPPS\AUTOCAD\STD_DETAILS\DRAWING_FILES\T10-15B

REV NO.	DATE	BY	APPR
1	8/08	RAW	MHA
2	7/14	RAW	MHA
3	3/17	RAW	MHA
4	7/19	RAW	MHA
5	2/21	OIS	MHA
6	9/21	RAW	MHA

PUBLIC WORKS – STREETS AND TRANSPORTATION

APPROVED BY: ENGINEER MANAGER

APPROVED DATE: 9/1/2021

CITY OF Vancouver WASHINGTON

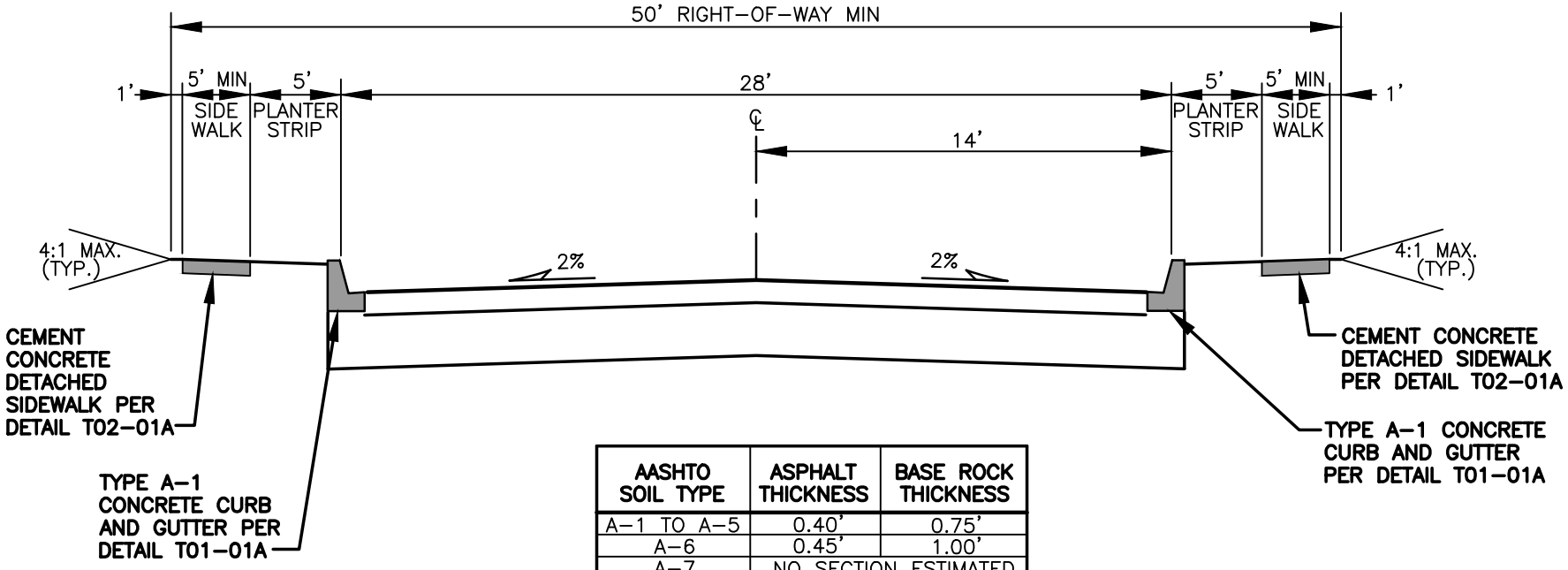

AASHTO SOIL TYPE	ASPHALT THICKNESS	BASE ROCK THICKNESS
A-1 TO A-5	0.40'	0.75'
A-6	0.45'	1.00'
A-7	NO SECTION ESTIMATED	
OTHER	NO SECTION ESTIMATED	

FOR NON RESIDENTIAL LOCAL ACCESS, SEE T10-14

NOTES:

1. MEANDERING SIDEWALKS MAY BE ALLOWED WITH THE DIRECTOR'S APPROVAL.
2. WIDER SIDEWALKS MAY BE REQUIRED UNDER SPECIAL CIRCUMSTANCES.
3. PARKING RESTRICTED TO ONE SIDE ONLY.
4. SEE STANDARD PLAN T10-00 FOR GENERAL NOTES.

LOCAL ACCESS OPTION B (28' ROADWAY WIDTH)

STANDARD PLAN NUMBER T10-15B

I:\CITYAPPS\AUTOCAD\STD_DETAILS\DRAWING_FILES\T10-16

REV NO.	DATE	BY	APPR
1	8/08	RAW	MHA
2	7/14	RAW	MHA
3	3/17	RAW	MHA
4	7/19	RAW	MHA
5	2/21	OIS	MHA
6	9/21	RAW	MHA

PUBLIC WORKS – STREETS AND TRANSPORTATION

APPROVED BY: ENGINEER MANAGER

APPROVED DATE: 9/1/2021

CITY OF Vancouver WASHINGTON

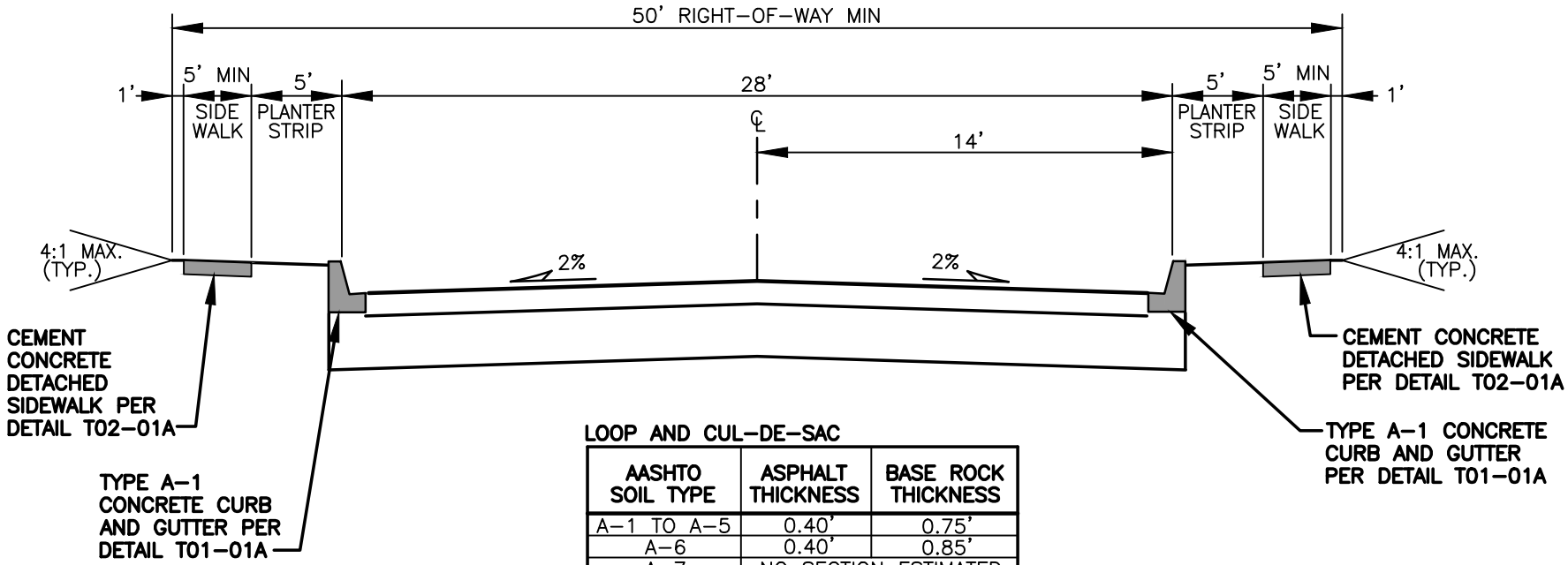

LOOP AND CUL-DE-SAC

AASHTO SOIL TYPE	ASPHALT THICKNESS	BASE ROCK THICKNESS
A-1 TO A-5	0.40'	0.75'
A-6	0.40'	0.85'
A-7	NO SECTION ESTIMATED	
OTHER	NO SECTION ESTIMATED	

NOTES:

1. SEE **STREET TERMINATION DETAIL T10-01B** FOR ADDITIONAL CUL-DE-SAC REQUIREMENTS.
2. WIDER SIDEWALKS MAY BE REQUIRED UNDER SPECIAL CIRCUMSTANCES.
3. PARKING RESTRICTED TO ONE SIDE ONLY.
4. SEE STANDARD PLAN T10-00 FOR GENERAL NOTES.

LOOP AND CUL-DE-SAC

STANDARD PLAN NUMBER T10-16

I:\CITYAPPS\AUTOCAD\STD_DETAILS\DRAWING_FILES\T10-17

REV NO.	DATE	BY	APPR
1	7/14	RAW	MHA
2	1/15	RAW	MHA
3	3/17	RAW	MHA
4	7/19	RAW	MHA
5	2/21	OIS	MHA
6	9/21	RAW	MHA

PUBLIC WORKS – STREETS AND TRANSPORTATION

APPROVED BY: ENGINEER MANAGER

APPROVED DATE: 9/1/2021

CITY OF Vancouver WASHINGTON

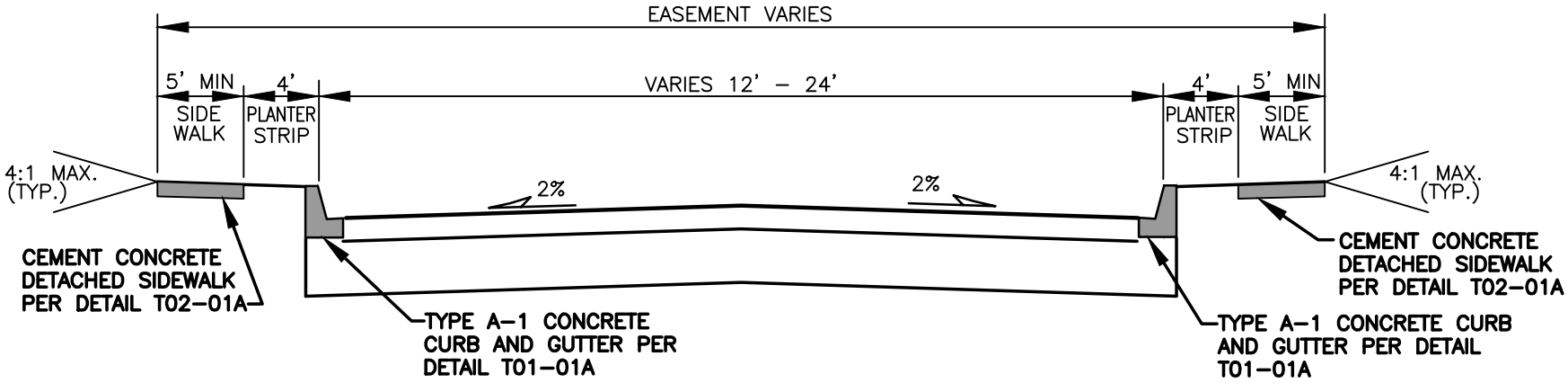

INFILL PRIVATE STREET 11.80.060.F-1

NO. OF DWELLINGS	STREET LENGTH	MIN. WIDTH (CURB TO CURB)
1–4	<150'	12'
1–4	>150'	16'
5–20	>150'	20'
20+	>150'	24'

AASHTO SOIL TYPE	ASPHALT THICKNESS	BASE ROCK THICKNESS
A-1 TO A-5	0.40'	0.75'
A-6	0.40'	0.85'
A-7	NO SECTION ESTIMATED	
OTHER	NO SECTION ESTIMATED	

PRIVATE STREET 11.80.050.C-1

NO. OF DWELLINGS	STREET LENGTH	MIN. WIDTH (CURB TO CURB)
1–4	<200'	12' (SEE NOTE 9)
1–4	200–400'	16' (SEE NOTE 9)
5–8	<200'	16'
5–8	200–400'	18'
5–8	401–750'	20'

NOTES:

1. SIDEWALK REQUIRED ON EACH SIDE OF THE STREET WITH DRIVEWAY ACCESS.
2. THE STREET SHALL BE WITHIN AN EASEMENT AND SHALL BE BOUNDED BY, AT A MINIMUM, THE BACK OF SIDEWALK OR THE BACK OF CURB, WHICHEVER IS FARTHER FROM THE STREET.
3. CROWN MAY BE ELIMINATED AND SLOPE IN ONE DIRECTION. INVERTED SECTION REQUIRES A ROAD MODIFICATION.
4. FOR INFILL STREETS, REFER TO V.M.C. 11.80.060 – INFILL DEVELOPMENT TRAFFIC STANDARDS.
5. PRIVATE STREETS SERVING 1–4 DWELLINGS ARE NOT REQUIRED TO CONSTRUCT CURB AND GUTTER, SIDEWALK OR STREET LIGHTS (SEE T10-18).
6. PERVIOUS CONCRETE MAY BE USED ON THE TRAVEL SURFACE OF A PRIVATE STREET ON A CASE BY CASE BASIS WITH THE APPROVAL OF CITY OF VANCOUVER TRANSPORTATION DEVELOPMENT REVIEW. THE PERVIOUS CONCRETE DESIGN SHALL BE INCLUDED WITH THE PROJECT'S FC SUBMITTAL.
7. SEE STANDARD PLAN T10-00 FOR GENERAL NOTES.

PRIVATE STREET

STANDARD PLAN NUMBER T10-17

I:\CITYAPPS\AUTOCAD\STD_DETAILS\DRAWING_FILES\T10-18

REV NO.	DATE	BY	APPR
1	8/08	RAW	MHA
2	7/14	RAW	MHA
3	1/15	RAW	MHA
4	7/19	RAW	MHA
5	2/21	OIS	MHA
6	9/21	RAW	MHA

PUBLIC WORKS – STREETS AND TRANSPORTATION

APPROVED BY: ENGINEER MANAGER

APPROVED DATE: 9/1/2021

CITY OF Vancouver WASHINGTON

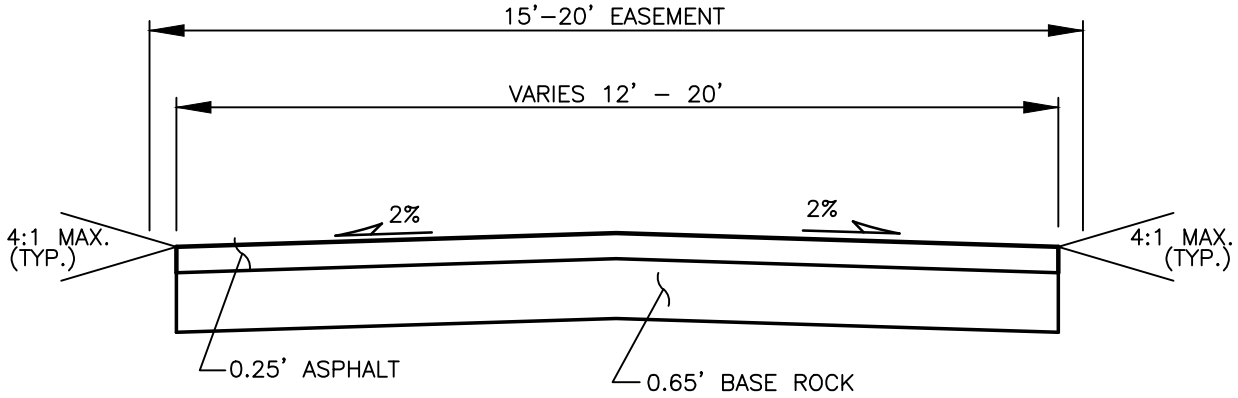

LENGTH	MIN. WIDTH (CURB TO CURB)
<150'	12'*
150'–400'	16'*

*FIRE CODE MAY REQUIRE 20'.

NOTES:

1. PRIOR TO ANY PAVEMENT DESIGN, CONTACT PUBLIC WORKS PAVEMENT MANAGER FOR DESIGN METHODOLOGY.
2. CROWN MAY BE ELIMINATED BY SLOPING IN ONE DIRECTION. INVERTED SECTION REQUIRES A ROAD MODIFICATION.
3. FOR INFILL STREETS, REFER TO V.M.C. 11.80.060 – INFILL DEVELOPMENT TRAFFIC STANDARDS.
4. PROVIDE TURNAROUNDS PER **STREET TERMINATION DETAIL T10–01** AND **VMC TABLE 11.80.070.C–3.**
5. PERVIOUS CONCRETE MAY BE USED ON THE TRAVEL SURFACE OF A PRIVATE STREET ON A CASE BY CASE BASIS WITH THE APPROVAL OF CITY OF VANCOUVER TRANSPORTATION DEVELOPMENT REVIEW. THE PERVIOUS CONCRETE DESIGN SHALL BE INCLUDED WITH THE PROJECT'S FC SUBMITTAL.
6. SEE STANDARD PLAN T10–00 FOR GENERAL NOTES.

PRIVATE STREET
1–4 DWELLINGS

STANDARD PLAN NUMBER
T10–18

I:\CITYAPPS\AUTOCAD\STD_DETAILS\DRAWING_FILES\T10-19

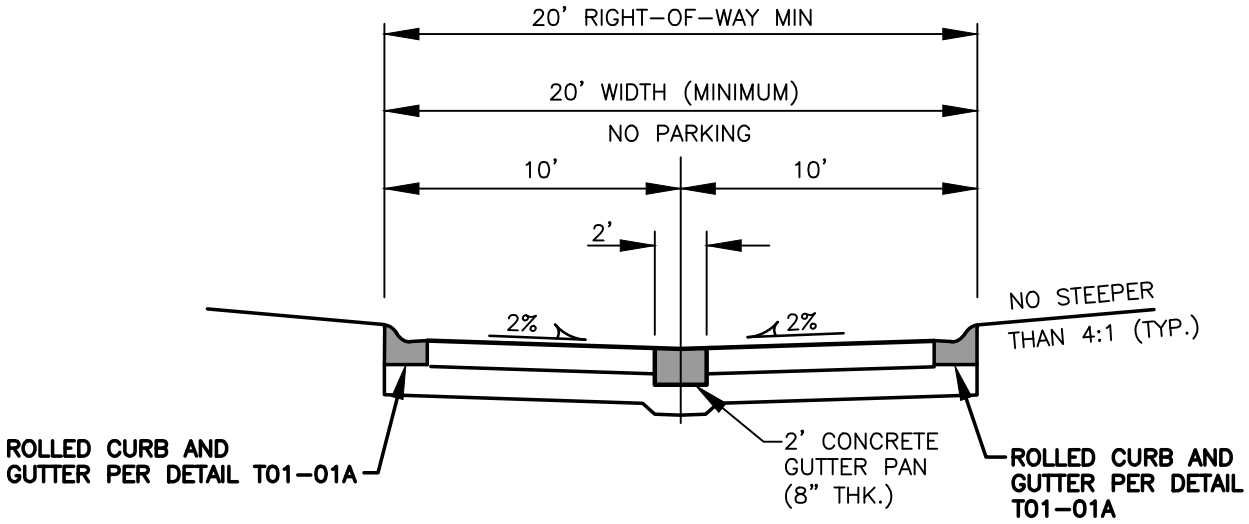

AASHTO SOIL TYPE	ASPHALT THICKNESS	BASE ROCK THICKNESS
A-1 TO A-5	0.40'	0.65'
A-6	0.30'	0.75'
A-7	NO SECTION ESTIMATED	
OTHER	NO SECTION ESTIMATED	

NOTES:

1. ADDITIONAL RIGHT-OF-WAY MAY BE REQUIRED AT CURVES AND CONNECTIONS TO STREETS.
2. SEE STANDARD PLAN T10-00 FOR GENERAL NOTES.

REV NO.	DATE	BY	APPR
1	8/08	RAW	MHA
2	7/14	RAW	MHA
3	3/17	RAW	MHA
4	7/19	RAW	MHA
5	2/21	OIS	MHA
6	9/21	RAW	MHA

PUBLIC WORKS - STREETS AND TRANSPORTATION

APPROVED BY: ENGINEER MANAGER

APPROVED DATE: 9/1/2021

CITY OF Vancouver WASHINGTON

ALLEY

STANDARD PLAN NUMBER T10-19

I:\CITYAPPS\AUTOCAD\STD_DETAILS\DRAWING_FILES\T10-20

REV NO.	DATE	BY	APPR
1	8/08	RAW	MHA
2	7/14	RAW	MHA
3	3/17	RAW	MHA
4	7/19	RAW	MHA
5	2/21	OIS	MHA
6	9/21	RAW	MHA

PUBLIC WORKS – STREETS AND TRANSPORTATION

APPROVED BY: ENGINEER MANAGER

APPROVED DATE: 9/1/2021

CITY OF Vancouver WASHINGTON

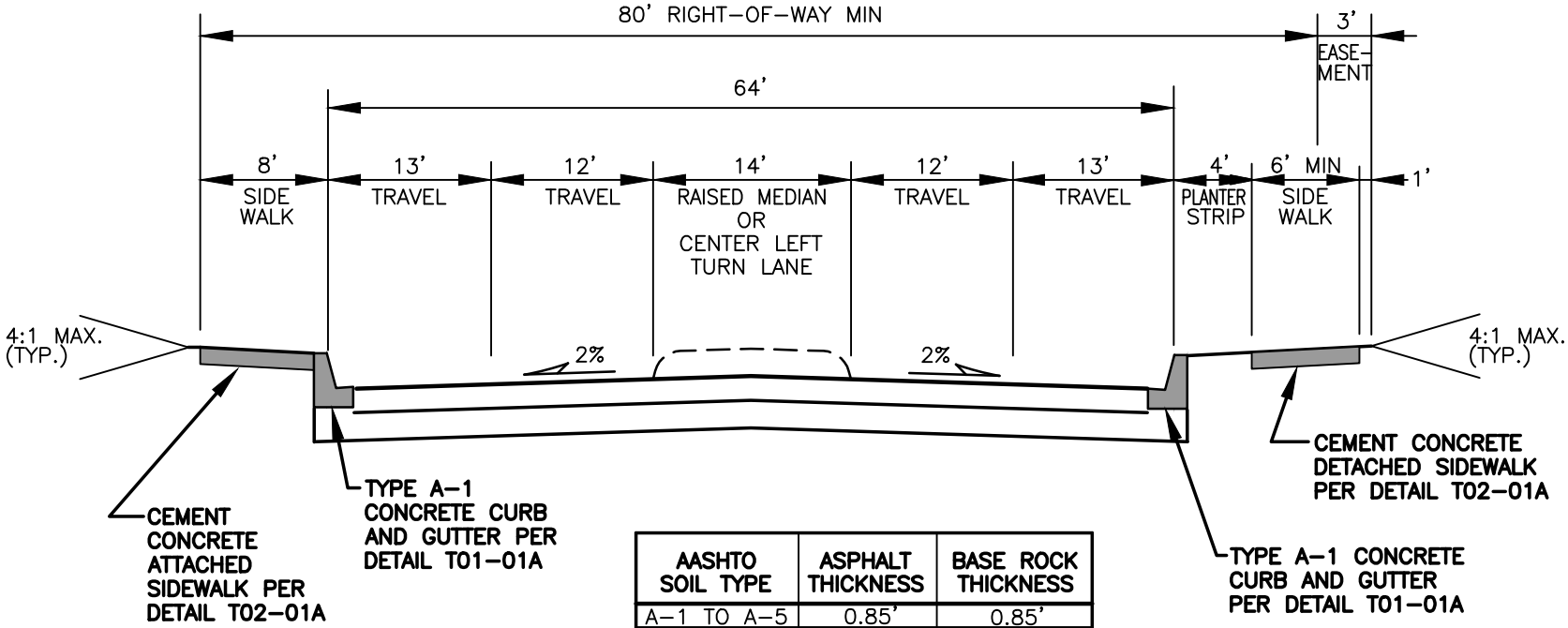

AASHTO SOIL TYPE	ASPHALT THICKNESS	BASE ROCK THICKNESS
A-1 TO A-5	0.85'	0.85'
A-6	0.90'	1.25'
A-7	NO SECTION ESTIMATED	
OTHER	NO SECTION ESTIMATED	

NOTES:

1. WIDER SIDEWALKS MAY BE REQUIRED UNDER SPECIAL CIRCUMSTANCES.
2. PRIOR TO ANY PAVEMENT DESIGN, CONTACT PUBLIC WORKS PAVEMENT MANAGER FOR DESIGN METHODOLOGY.
3. SEE STANDARD PLAN T10-00 FOR GENERAL NOTES.

5-LANE PRIMARY INDUSTRIAL II

STANDARD PLAN NUMBER T10-20

I:\CITYAPPS\AUTOCAD\STD_DETAILS\DRAWING_FILES\T10-21

REV NO.	DATE	BY	APPR
1	8/08	RAW	MHA
2	7/14	RAW	MHA
3	3/17	RAW	MHA
4	7/19	RAW	MHA
5	2/21	OIS	MHA
6	9/21	RAW	MHA

PUBLIC WORKS – STREETS AND TRANSPORTATION

APPROVED BY: ENGINEER MANAGER

APPROVED DATE: 9/1/2021

CITY OF Vancouver WASHINGTON

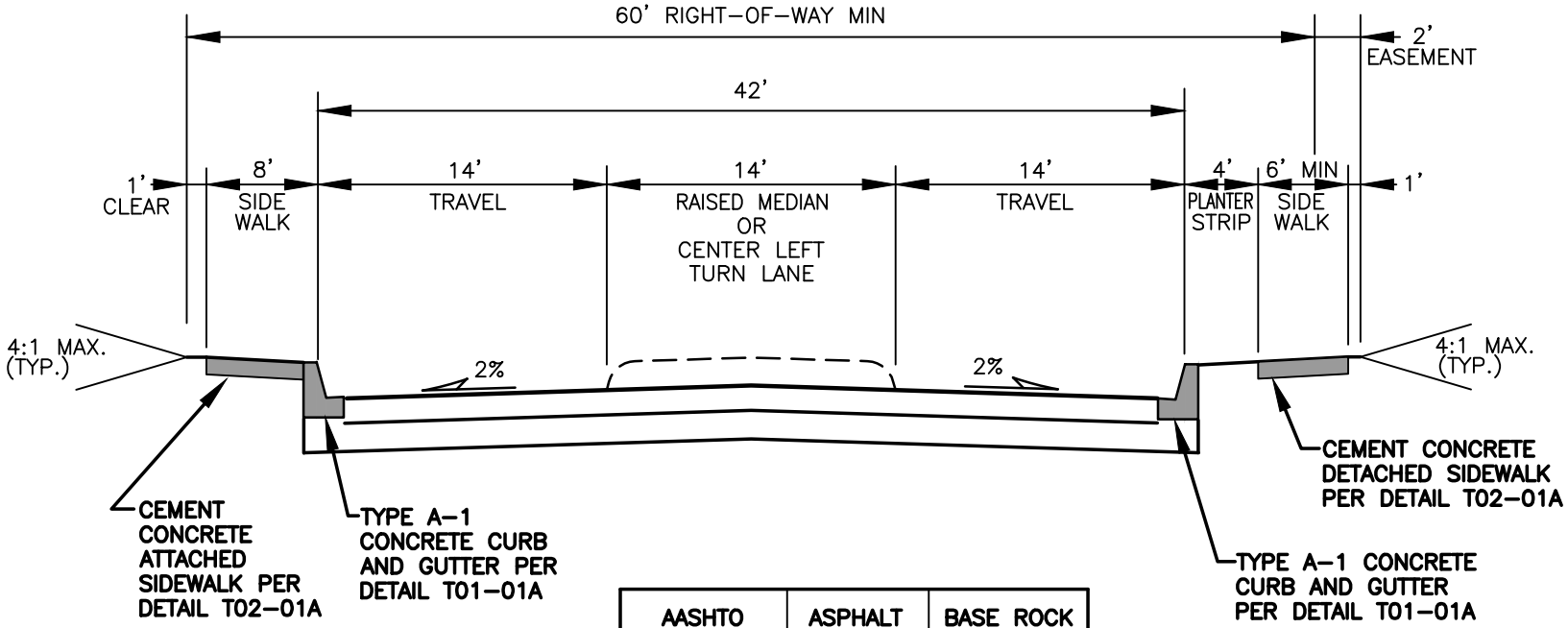

AASHTO SOIL TYPE	ASPHALT THICKNESS	BASE ROCK THICKNESS
A-1 TO A-5	0.80'	0.85'
A-6	0.85'	1.25'
A-7	NO SECTION ESTIMATED	
OTHER	NO SECTION ESTIMATED	

NOTES:

1. WIDER SIDEWALKS MAY BE REQUIRED UNDER SPECIAL CIRCUMSTANCES.
2. PRIOR TO ANY PAVEMENT DESIGN, CONTACT PUBLIC WORKS PAVEMENT MANAGER FOR DESIGN METHODOLOGY.
3. SEE STANDARD PLAN T10-00 FOR GENERAL NOTES.

3-LANE PRIMARY INDUSTRIAL I

STANDARD PLAN NUMBER

T10-21

I:\CITYAPPS\AUTOCAD\STD_DETAILS\DRAWING_FILES\T10-22

REV NO.	DATE	BY	APPR
1	8/08	RAW	MHA
2	7/14	RAW	MHA
3	3/17	RAW	MHA
4	7/19	RAW	MHA
5	2/21	OIS	MHA
6	9/21	RAW	MHA

PUBLIC WORKS – STREETS AND TRANSPORTATION

APPROVED BY: ENGINEER/MANAGER

APPROVED DATE: 9/1/2021

CITY OF Vancouver WASHINGTON

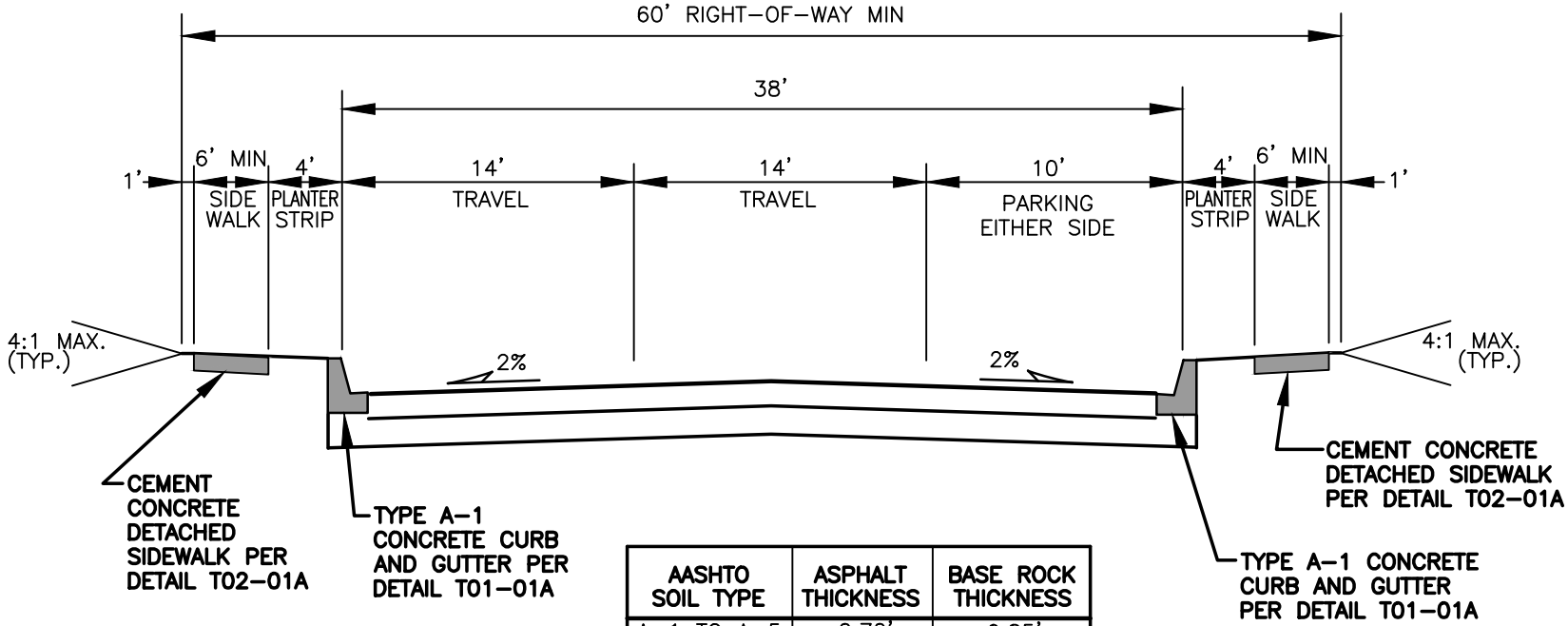

AASHTO SOIL TYPE	ASPHALT THICKNESS	BASE ROCK THICKNESS
A-1 TO A-5	0.70'	0.85'
A-6	0.75'	1.25'
A-7	NO SECTION ESTIMATED	
OTHER	NO SECTION ESTIMATED	

NOTES:

1. A PAVEMENT DESIGN REPORT SHALL BE DONE FOR ALL PCC PAVEMENT CONSTRUCTION.
2. MEANDERING SIDEWALKS MAY BE ALLOWED WITH THE DIRECTOR'S APPROVAL.
3. WIDER SIDEWALKS MAY BE REQUIRED UNDER SPECIAL CIRCUMSTANCES.
4. SEE STANDARD PLAN T10-00 FOR GENERAL NOTES.

2-LANE SECONDARY INDUSTRIAL

STANDARD PLAN NUMBER

T10-22

I:\CITYAPPS\AUTOCAD\STD_DETAILS\DRAWING_FILES\T10-23

REV NO.	DATE	BY	APPR
1	8/08	RAW	MHA
2	7/14	RAW	MHA
3	3/17	RAW	MHA
4	7/19	RAW	MHA
5	2/21	OIS	MHA
6	9/21	RAW	MHA

PUBLIC WORKS – STREETS AND TRANSPORTATION

APPROVED BY: ENGINEER MANAGER

APPROVED DATE: 9/1/2021

CITY OF Vancouver WASHINGTON

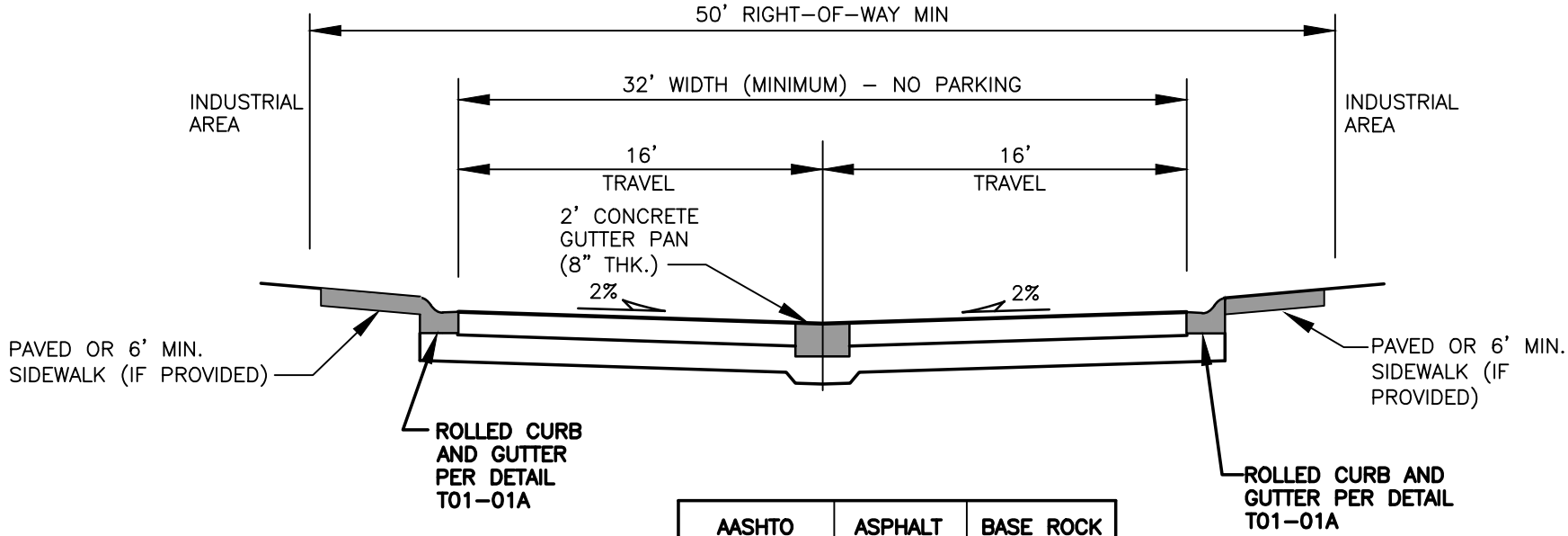

AASHTO SOIL TYPE	ASPHALT THICKNESS	BASE ROCK THICKNESS
A-1 TO A-5	0.65'	0.75'
A-6	0.65'	1.25'
A-7	NO SECTION ESTIMATED	
OTHER	NO SECTION ESTIMATED	

NOTES:

1. IF BUILT, SIDEWALKS SHALL HAVE A CONCRETE DEPTH OF 6" (INCHES) MIN.
2. WIDER SIDEWALKS MAY BE REQUIRED UNDER SPECIAL CIRCUMSTANCES.
3. SEE STANDARD PLAN T10-00 FOR GENERAL NOTES.

2-LANE LOCAL INDUSTRIAL

STANDARD PLAN NUMBER T10-23

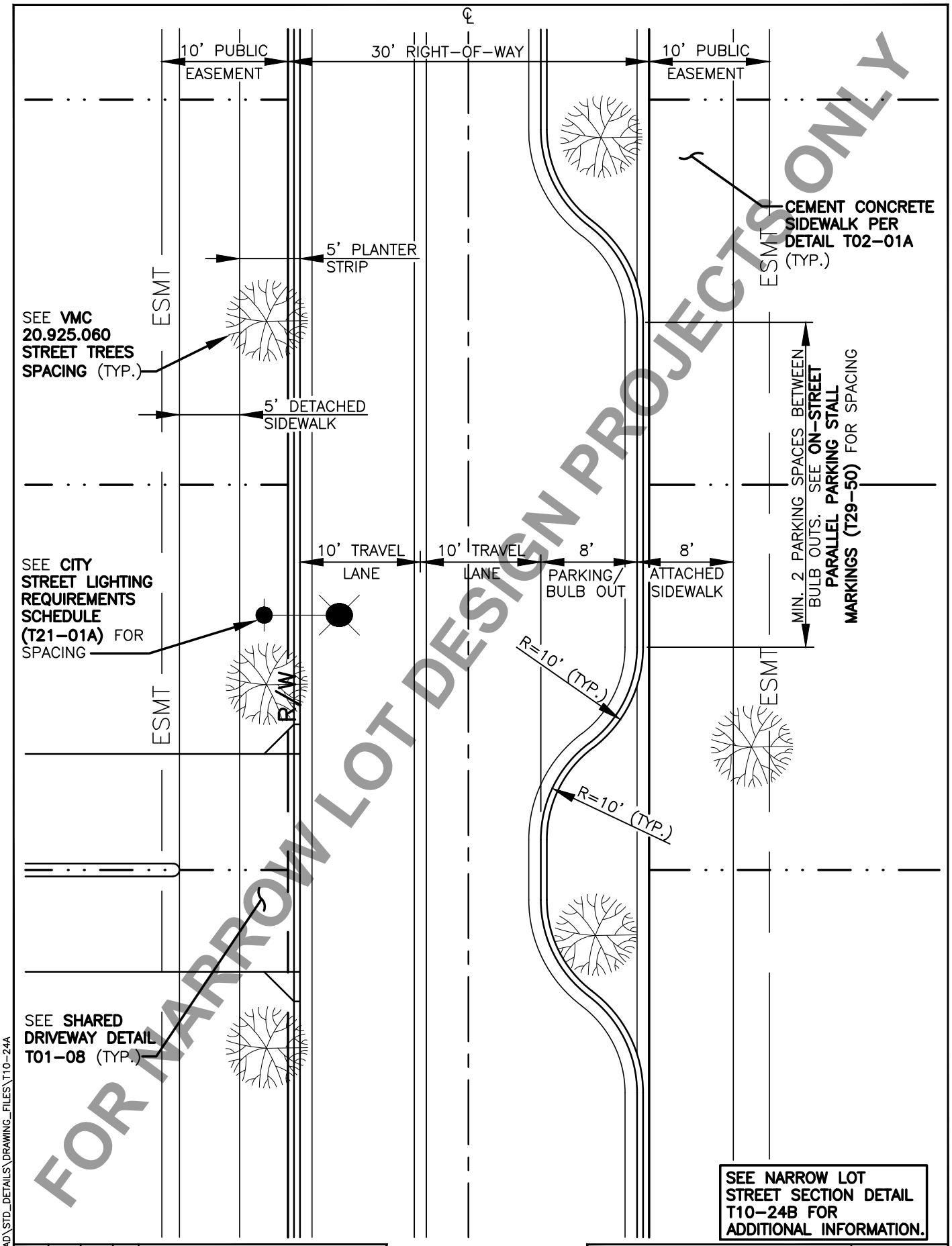

SEE NARROW LOT STREET SECTION DETAIL T10-24B FOR ADDITIONAL INFORMATION.

FOR NARROW LOT DESIGN PROJECTS ONLY

REV NO.	DATE	BY	APPR
1	2/07	RAW	MHA
2	8/08	RAW	MHA
3	7/14	RAW	MHA
4	9/21	RAW	MHA

PUBLIC WORKS – STREETS AND TRANSPORTATION

APPROVED BY: M H Abdalla
ENGINEER MANAGER

APPROVED DATE: 9/1/2021

CITY OF Vancouver WASHINGTON

NARROW LOT STREET PLAN DETAIL

STANDARD PLAN NUMBER

T10-24A

I:\CITYAPPS\AUTOCAD\STD_DETAILS\DRAWING_FILES\T10-24A

I:\CITYAPPS\AUTOCAD\STD_DETAILS\DRAWING_FILES\T10-24B

REV NO.	DATE	BY	APPR
1	8/08	RAW	MHA
2	7/14	RAW	MHA
3	3/17	RAW	MHA
4	7/19	RAW	MHA
5	2/21	OIS	MHA
6	9/21	RAW	MHA

PUBLIC WORKS – STREETS AND TRANSPORTATION

APPROVED BY: ENGINEER MANAGER

APPROVED DATE: 9/1/2021

CITY OF Vancouver WASHINGTON

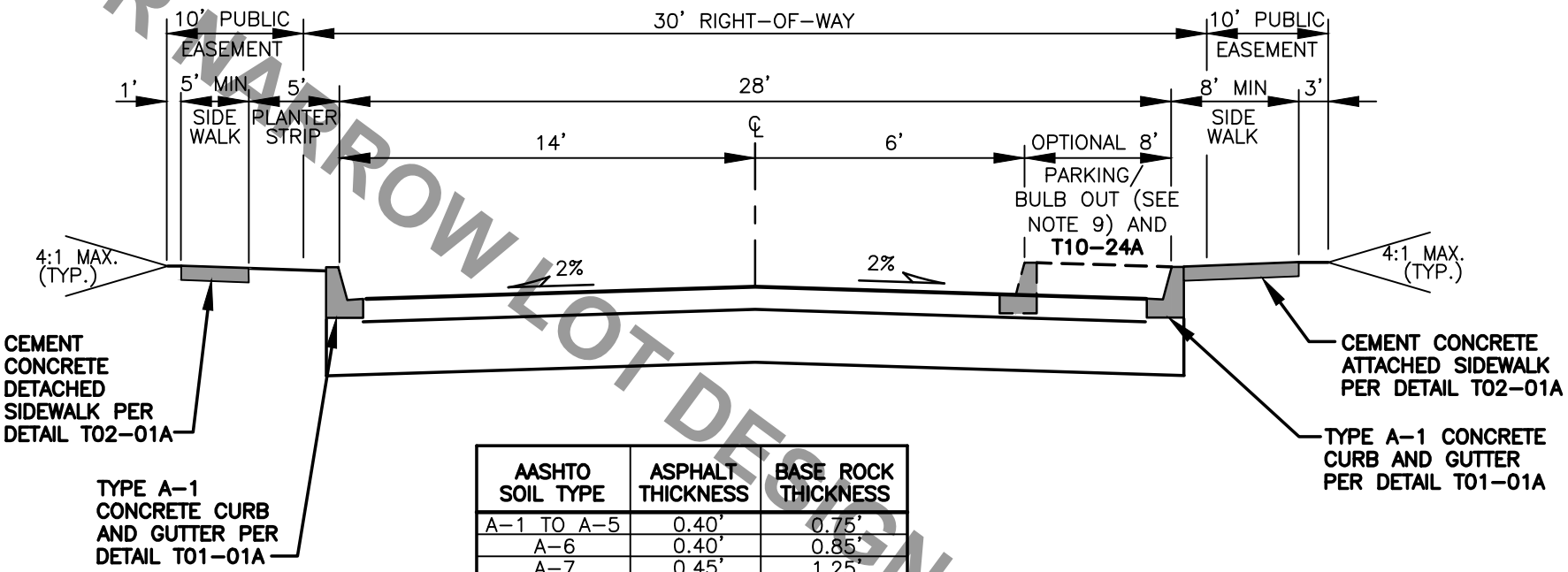

AASHTO SOIL TYPE	ASPHALT THICKNESS	BASE ROCK THICKNESS
A-1 TO A-5	0.40'	0.75'
A-6	0.40'	0.85'
A-7	0.45'	1.25'
OTHER	NO SECTION ESTIMATED	

NOTES:

1. WIDER SIDEWALKS MAY BE REQUIRED UNDER SPECIAL CIRCUMSTANCES.
2. PARKING/BULB OUT RESTRICTED TO ONE SIDE ONLY.
3. SEE **STREET TERMINATION DETAIL T10-01** FOR ADDITIONAL CUL-DE-SAC REQUIREMENTS.
4. SEE **NARROW LOT STREET PLAN DETAIL T10-24A** FOR ADDITIONAL INFORMATION.
5. SEE STANDARD PLAN T10-00 FOR GENERAL NOTES.

FOR NARROW LOT DESIGN PROJECTS ONLY

NARROW LOT STREET SECTION

STANDARD PLAN NUMBER T10-24B

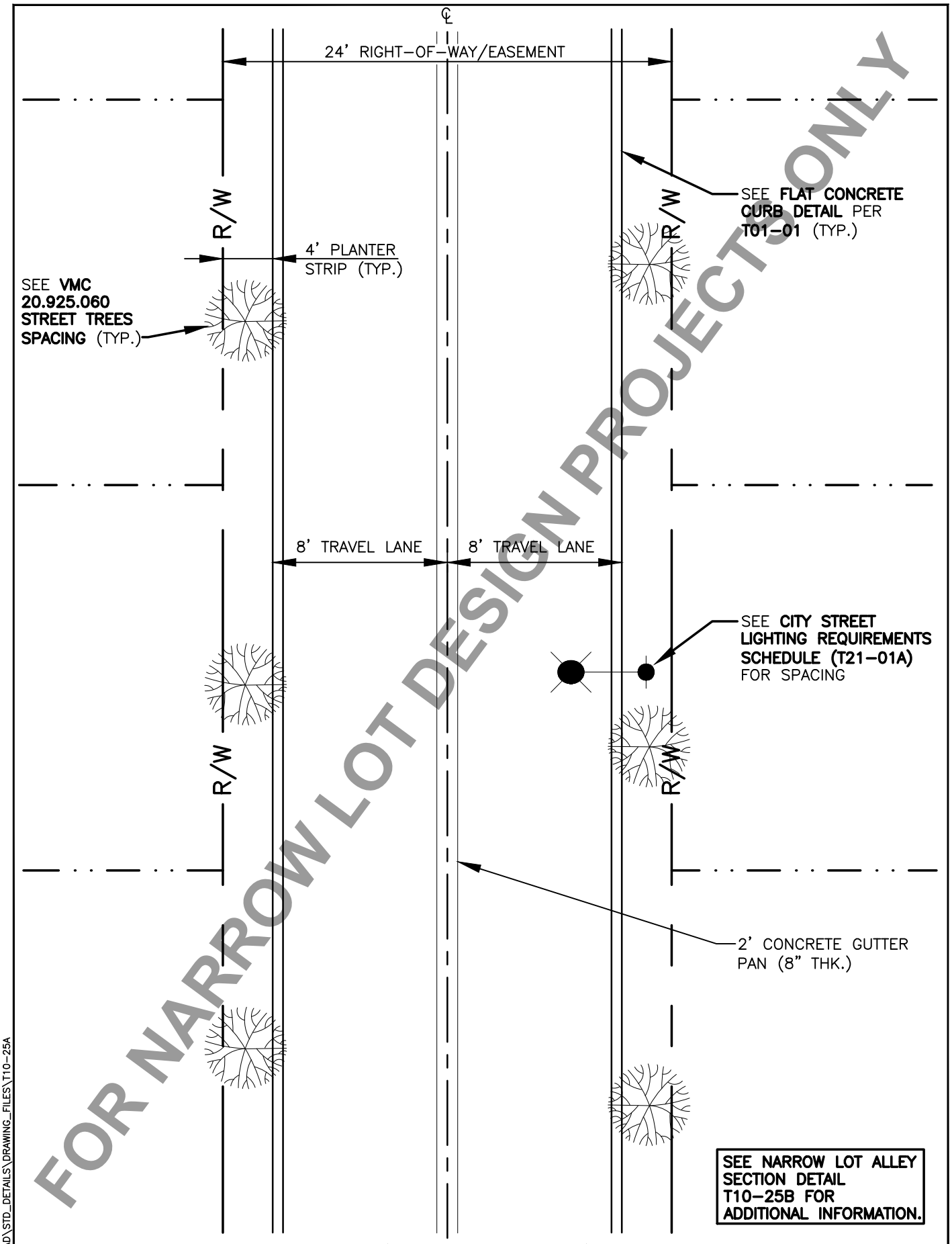

FOR NARROW LOT DESIGN PROJECTS ONLY

REV NO.	DATE	BY	APPR
1	2/07	RAW	MHA
2	8/08	RAW	MHA
3	7/14	RAW	MHA
4	9/21	RAW	MHA

PUBLIC WORKS – STREETS AND TRANSPORTATION

APPROVED BY: M H Abdalla
ENGINEER MANAGER

APPROVED DATE: 9/1/2021

CITY OF Vancouver WASHINGTON

NARROW LOT ALLEY PLAN DETAIL

STANDARD PLAN NUMBER

T10-25A

I:\CITYAPPS\AUTOCAD\STD_DETAILS\DRAWING_FILES\T10-25A

I:\CITYAPPS\AUTOCAD\STD_DETAILS\DRAWING_FILES\T10-25B

REV NO.	DATE	BY	APPR
1	8/08	RAW	MHA
2	7/14	RAW	MHA
3	3/17	RAW	MHA
4	7/19	RAW	MHA
5	2/21	OIS	MHA
6	9/21	RAW	MHA

PUBLIC WORKS – STREETS AND TRANSPORTATION

APPROVED BY: ENGINEER MANAGER

APPROVED DATE: 9/1/2021

CITY OF Vancouver WASHINGTON

NARROW LOT ALLEY SECTION

STANDARD PLAN NUMBER T10-25B

FOR NARROW LOT DESIGN PROJECTS ONLY

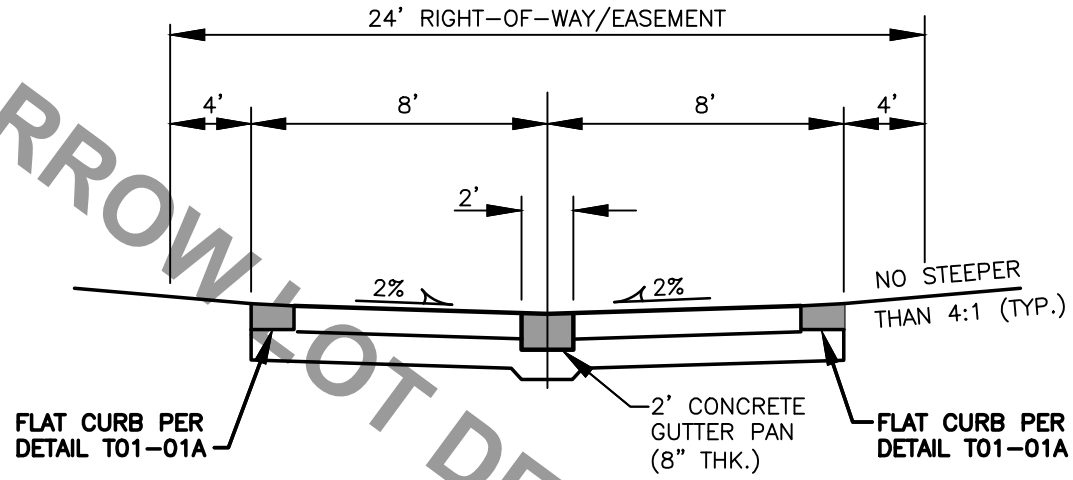

AASHTO SOIL TYPE	ASPHALT THICKNESS	BASE ROCK THICKNESS
A-1 TO A-5	0.40'	0.75'
A-6	0.40'	0.85'
A-7	0.45'	1.25'
OTHER	NO SECTION ESTIMATED	

NOTES:

1. ADDITIONAL RIGHT-OF-WAY MAY BE REQUIRED AT CURVES AND CONNECTIONS TO STREETS.
2. SEE **NARROW LOT ALLEY PLAN DETAIL T10-25A.**
3. SEE STANDARD PLAN T10-00 FOR GENERAL NOTES.

I:\CITYAPPS\AUTOCAD\STD_DETAILS\DRAWING_FILES\TC1_COV

BUFFER DATA					
LONGITUDINAL BUFFER SPACE = B					
SPEED (MPH)	25	30	35	40	45
LENGTH (FEET)	155	200	250	305	360
BUFFER VEHICLE ROLL AHEAD DISTANCE = R					
TRANSPORTABLE ATTENUATOR MINIMUM HOST VEHICLE WEIGHT 15,000 LBS. THE MAXIMUM WEIGHT SHALL BE IN ACCORDANCE WITH THE MANUFACTURERS RECOMMENDATION.				30 FEET MIN. TO 100 FEET MAX.	
PROTECTIVE VEHICLE MAY BE A WORK VEHICLE STRATEGICALLY LOCATED TO SHIELD THE WORK AREA.				NO SPECIFIED DISTANCE REQUIRED	

SIGN SPACING = X (1)		
PRINCIPAL ARTERIALS	45 MPH	500'±
PRINCIPAL, MINOR OR COLLECTOR ARTERIALS	35/40 MPH	350'±
PRINCIPAL, MINOR, COLLECTOR ARTERIALS, INDUSTRIAL AND LOCAL ACCESS ROADWAYS	25/30 MPH	200'± (2)
INDUSTRIAL AND LOCAL ACCESS ROADWAYS	25 MPH OR LESS	100'± (2)

(1) ALL SPACING MAY BE ADJUSTED TO ACCOMMODATE INTERSECTIONS AND DRIVEWAYS.

(2) THIS SPACING MAY BE REDUCED IN URBAN AREAS TO FIT ROADWAY CONDITIONS.

CHANNELIZATION DEVICE SPACING (FEET)		
MPH	TAPER	TANGENT
35/45	30	60
25/30	20	40

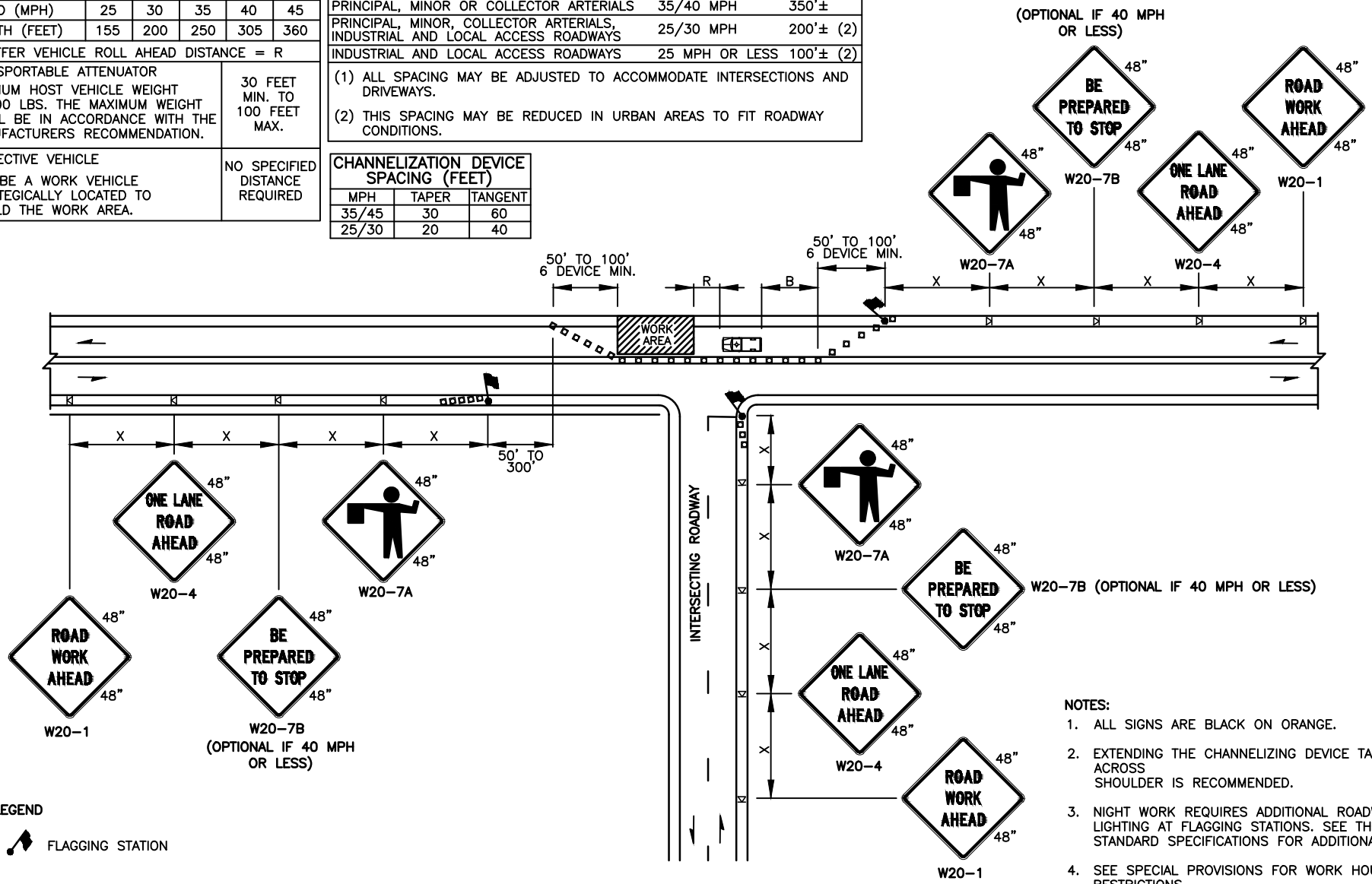

NOTES:

1. ALL SIGNS ARE BLACK ON ORANGE.
2. EXTENDING THE CHANNELIZING DEVICE TAPER ACROSS SHOULDER IS RECOMMENDED.
3. NIGHT WORK REQUIRES ADDITIONAL ROADWAY LIGHTING AT FLAGGING STATIONS. SEE THE STANDARD SPECIFICATIONS FOR ADDITIONAL DETAILS.
4. SEE SPECIAL PROVISIONS FOR WORK HOUR RESTRICTIONS.

LEGEND

- FLAGGING STATION
- TEMPORARY SIGN LOCATION
- CHANNELIZING DEVICES
- PROTECTIVE VEHICLE

REV NO.	DATE	BY	APPR
1	3/16	RAW	CJC
2	9/21	RAW	CJC

PUBLIC WORKS – STREETS AND TRANSPORTATION

APPROVED BY: TRAFFIC ENGINEER MANAGER

APPROVED DATE: 9/1/2021

CITY OF Vancouver WASHINGTON

TRAFFIC CONTROL STANDARD PLAN
ONE-LANE TWO WAY TRAFFIC CONTROL WITH FLAGGERS

STANDARD PLAN NUMBER

TC1

I:\CITYAPPS\AUTOCAD\STD_DETAILS\DRAWING_FILES\TC2_COV

MINIMUM TAPER LENGTH = L (FEET)					
LANE WIDTH (FEET)	POSTED SPEED (MPH)				
	25	30	35	40	45
10	105	150	205	270	450
11	115	165	225	295	495
12	125	180	245	320	540

CHANNELIZATION DEVICE SPACING (FEET)		
MPH	TAPER	TANGENT
35/45	30	60
25/30	20	40

NOTES:

1. REFER TO SHEET TC1 FOR ADDITIONAL SIGNING AND FLAGGING DETAILS NOT SHOWN.
2. CHANNELIZING DEVICES ARE RECOMMENDED ALONG CENTERLINE TO SEPARATE TRAFFIC FROM WORK OPERATION. DEVICES ARE REQUIRED AT TAPERS TO SHIFT TRAFFIC MOVEMENT BETWEEN LANES AND TO PROTECT FLAGGING STATIONS.
3. SIGN G25-101 IS RECOMMENDED FOR NON-STOP SIGN CONTROLLED APPROACHES SUCH AS PRIVATE ROADS AND DRIVEWAYS. THIS SIGN IS NOT REQUIRED TO BE ALUMINUM SUBSTRATE AND CAN BE MADE OF ALTERNATIVE MATERIALS.

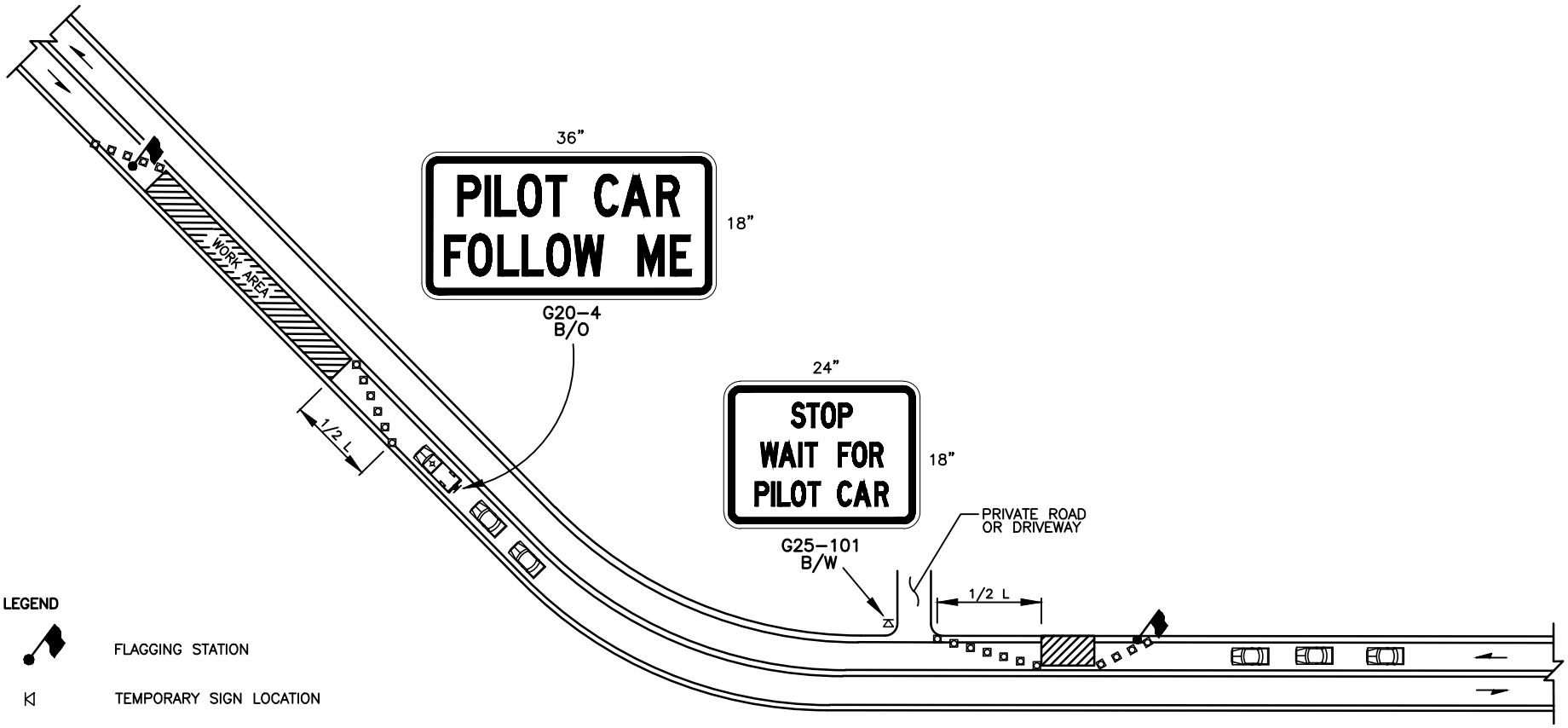

LEGEND

- FLAGGING STATION
- TEMPORARY SIGN LOCATION
- CHANNELIZING DEVICES
- PILOT VEHICLE
- MOTORIST VEHICLE

REV NO.	DATE	BY	APPR
1	3/16	RAW	CJC
2	9/21	RAW	CJC

PUBLIC WORKS – STREETS AND TRANSPORTATION

APPROVED BY: TRAFFIC ENGINEER MANAGER

APPROVED DATE: 9/1/2021

CITY OF Vancouver WASHINGTON

TRAFFIC CONTROL STANDARD PLAN PILOT CAR OPERATION

STANDARD PLAN NUMBER

TC2

I:\CITYAPPS\AUTOCAD\STD_DETAILS\DRAWING_FILES\TC3_COV

BUFFER DATA					
LONGITUDINAL BUFFER SPACE = B					
SPEED (MPH)	25	30	35	40	45
LENGTH (FEET)	155	200	250	305	360
BUFFER VEHICLE ROLL AHEAD DISTANCE = R					
TRANSPORTABLE ATTENUATOR MINIMUM HOST VEHICLE WEIGHT 15,000 LBS. THE MAXIMUM WEIGHT SHALL BE IN ACCORDANCE WITH THE MANUFACTURERS RECOMMENDATION.				30 FEET MIN. TO 100 FEET MAX.	
PROTECTIVE VEHICLE MAY BE A WORK VEHICLE STRATEGICALLY LOCATED TO SHIELD THE WORK AREA.				NO SPECIFIED DISTANCE REQUIRED	

SIGN SPACING = X (1)		
PRINCIPAL ARTERIALS	45 MPH	500'±
PRINCIPAL, MINOR OR COLLECTOR ARTERIALS	35/40 MPH	350'±
PRINCIPAL, MINOR, COLLECTOR ARTERIALS, INDUSTRIAL AND LOCAL ACCESS ROADWAYS	25/30 MPH	200'± (2)
INDUSTRIAL AND LOCAL ACCESS ROADWAYS	25 MPH OR LESS	100'± (2)

(1) ALL SPACING MAY BE ADJUSTED TO ACCOMMODATE INTERSECTIONS AND DRIVEWAYS.

(2) THIS SPACING MAY BE REDUCED IN URBAN AREAS TO FIT ROADWAY CONDITIONS.

MINIMUM LANE CLOSURE TAPER LENGTH = L (FEET)					
LANE WIDTH (FEET)	POSTED SPEED (MPH)				
	25	30	35	40	45
10	105	150	205	270	450
11	115	165	225	295	495
12	125	180	245	320	540

CHANNELIZATION DEVICE SPACING (FEET)		
MPH	TAPER	TANGENT
35/45	30	60
25/30	20	40

PCMS	
1	2
RIGHT LANE CLOSURE	1 MILE AHEAD
2.0 SEC	2.0 SEC

FIELD LOCATE 1 MILE ± IN ADVANCE OF LANE CLOSURE SIGNING.

MINIMUM SHOULDER TAPER LENGTH = L/3 (FEET)					
SHOULDER WIDTH (FEET)	POSTED SPEED (MPH)				
	25	30	35	40	45
8	40	40	60	90	120
10	40	60	90	90	150
USE A MINIMUM 3 DEVICES TAPER FOR SHOULDER LESS THEN 8'.					

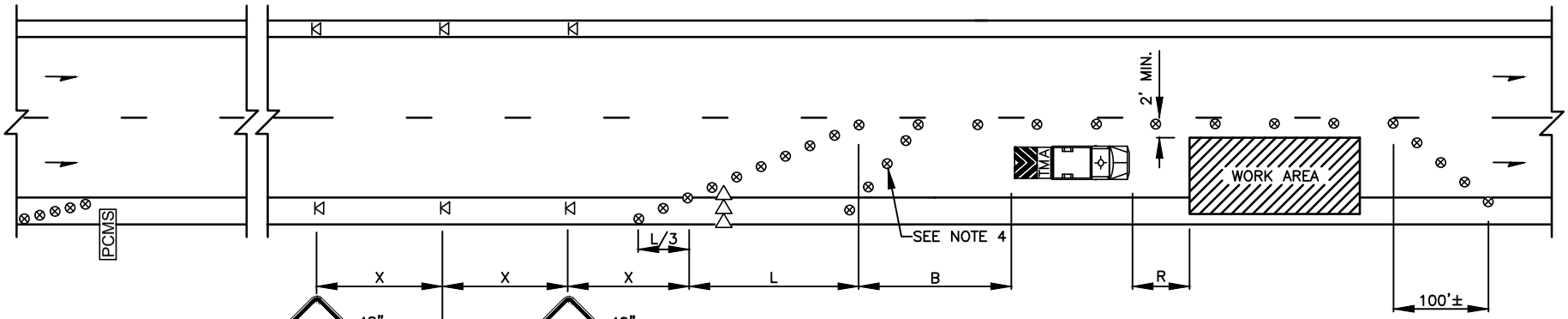

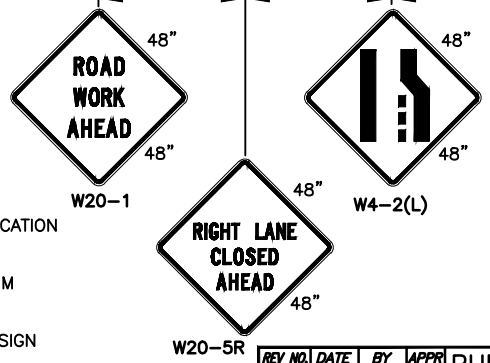

NOTES:

1. SEE SPECIAL PROVISIONS FOR WORK HOUR RESTRICTIONS.
2. EXTEND DEVICE TAPER AT L/3 ACROSS SHOULDER.
3. DEVICES SHALL NOT ENCROACH INTO THE ADJACENT LANE.
4. USE TRANSVERSE DEVICES IN CLOSED LANE EVERY 1000' (FT) (RECOMMENDED).
5. DEVICE SPACING FOR THE DOWNSTREAM TAPER SHALL BE 20' (FT).
6. ALL SIGNS ARE BLACK ON ORANGE.

LEGEND

- TEMPORARY SIGN LOCATION
- TRAFFIC SAFETY DRUM
- SEQUENTIAL ARROW SIGN
- TRANSPORTABLE ATTENUATOR
- PCMS — PORTABLE CHANGEABLE MESSAGE SIGN

REV NO.	DATE	BY	APPR
1	3/16	RAW	CJC
2	9/21	RAW	CJC

PUBLIC WORKS – STREETS AND TRANSPORTATION

APPROVED BY: TRAFFIC ENGINEER MANAGER

APPROVED DATE: 9/1/2021

CITY OF Vancouver WASHINGTON

TRAFFIC CONTROL STANDARD PLAN
SINGLE–LANE CLOSURE FOR MULTI–LANE ROADWAYS

STANDARD PLAN NUMBER

TC3

I:\CITYAPPS\AUTOCAD\STD_DETAILS\DRAWING_FILES\TC4_COV

BUFFER DATA					
LONGITUDINAL BUFFER SPACE = B					
SPEED (MPH)	25	30	35	40	45
LENGTH (FEET)	155	200	250	305	360
BUFFER VEHICLE ROLL AHEAD DISTANCE = R					
TRANSPORTABLE ATTENUATOR MINIMUM HOST VEHICLE WEIGHT 15,000 LBS. THE MAXIMUM WEIGHT SHALL BE IN ACCORDANCE WITH THE MANUFACTURERS RECOMMENDATION.				30 FEET MIN. TO 100 FEET MAX.	
PROTECTIVE VEHICLE MAY BE A WORK VEHICLE STRATEGICALLY LOCATED TO SHIELD THE WORK AREA.				NO SPECIFIED DISTANCE REQUIRED	

SIGN SPACING = X (1)		
PRINCIPAL ARTERIALS	45 MPH	500'±
PRINCIPAL, MINOR OR COLLECTOR ARTERIALS	35/40 MPH	350'±
PRINCIPAL, MINOR, COLLECTOR ARTERIALS, INDUSTRIAL AND LOCAL ACCESS ROADWAYS	25/30 MPH	200'± (2)
INDUSTRIAL AND LOCAL ACCESS ROADWAYS	25 MPH OR LESS	100'± (2)

(1) ALL SPACING MAY BE ADJUSTED TO ACCOMMODATE INTERSECTIONS AND DRIVEWAYS.

(2) THIS SPACING MAY BE REDUCED IN URBAN AREAS TO FIT ROADWAY CONDITIONS.

MINIMUM LANE CLOSURE TAPER LENGTH = L (FEET)					
LANE WIDTH (FEET)	POSTED SPEED (MPH)				
	25	30	35	40	45
10	105	150	205	270	450
11	115	165	225	295	495
12	125	180	245	320	540

CHANNELIZATION DEVICE SPACING (FEET)		
MPH	TAPER	TANGENT
35/45	30	60
25/30	20	40

PCMS	
1	2
2 LANE CLOSED AHEAD	WATCH FOR SLOW TRAFFIC
2.0 SEC	2.0 SEC

FIELD LOCATE 1 MILE ± IN ADVANCE OF LANE CLOSURE SIGNING.

MINIMUM SHOULDER TAPER LENGTH = L/3 (FEET)					
SHOULDER WIDTH (FEET)	POSTED SPEED (MPH)				
	25	30	35	40	45
8	40	40	60	90	120
10	40	60	90	90	150
USE A MINIMUM 3 DEVICES TAPER FOR SHOULDER LESS THEN 8'.					

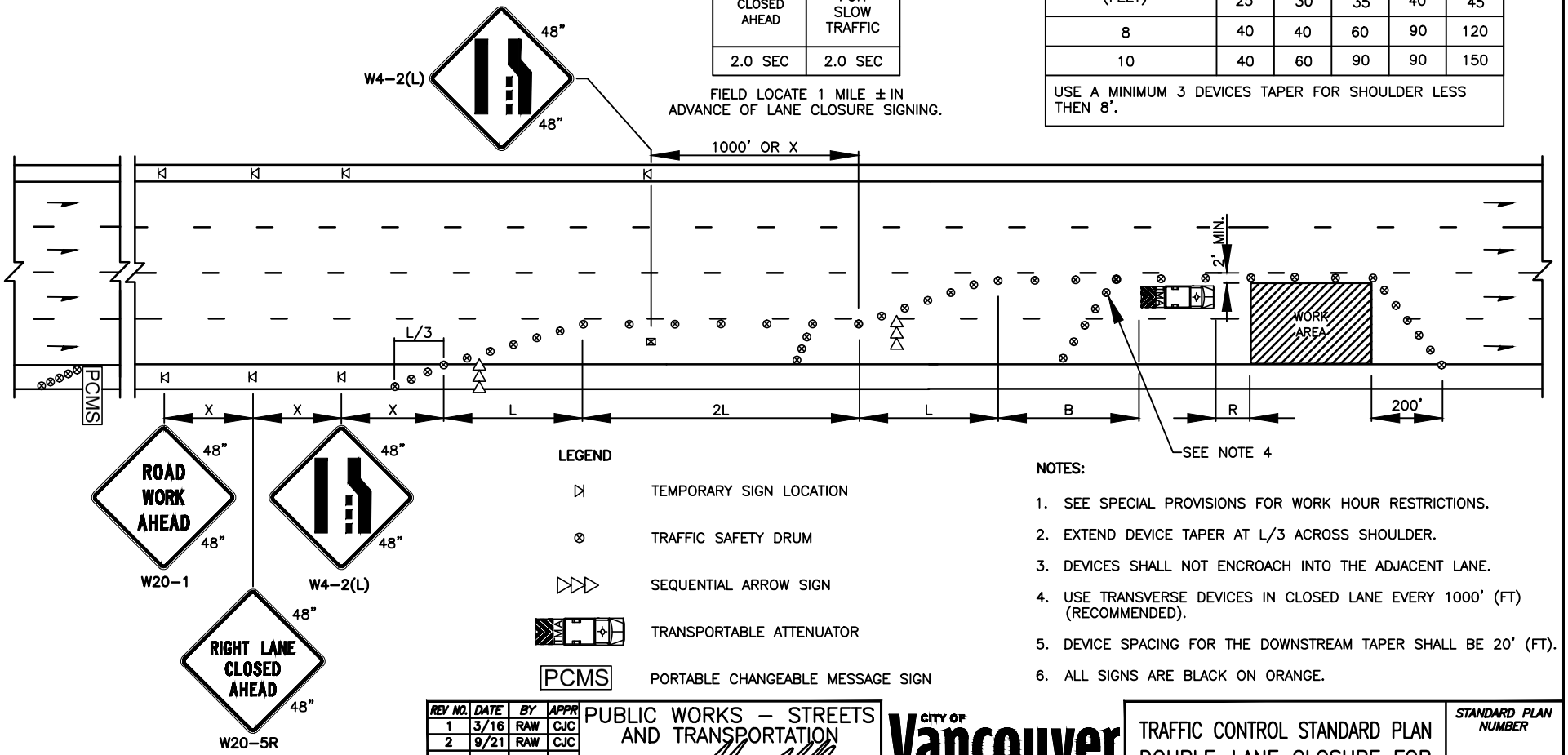

LEGEND

- TEMPORARY SIGN LOCATION
- TRAFFIC SAFETY DRUM
- SEQUENTIAL ARROW SIGN
- TRANSPORTABLE ATTENUATOR
- PCMS — PORTABLE CHANGEABLE MESSAGE SIGN

NOTES:

1. SEE SPECIAL PROVISIONS FOR WORK HOUR RESTRICTIONS.
2. EXTEND DEVICE TAPER AT L/3 ACROSS SHOULDER.
3. DEVICES SHALL NOT ENCROACH INTO THE ADJACENT LANE.
4. USE TRANSVERSE DEVICES IN CLOSED LANE EVERY 1000' (FT) (RECOMMENDED).
5. DEVICE SPACING FOR THE DOWNSTREAM TAPER SHALL BE 20' (FT).
6. ALL SIGNS ARE BLACK ON ORANGE.

REV NO.	DATE	BY	APPR
1	3/16	RAW	CJC
2	9/21	RAW	CJC

PUBLIC WORKS – STREETS AND TRANSPORTATION

APPROVED BY: TRAFFIC ENGINEER MANAGER

APPROVED DATE: 9/1/2021

CITY OF Vancouver WASHINGTON

TRAFFIC CONTROL STANDARD PLAN
DOUBLE–LANE CLOSURE FOR MULTI–LANE ROADWAYS

STANDARD PLAN NUMBER

TC4

I:\CITYAPPS\AUTOCAD\STD_DETAILS\DRAWING_FILES\TC5_COV

MINIMUM SHOULDER TAPER LENGTH = L/3 (FEET)				
SHOULDER WIDTH (FEET)	POSTED SPEED (MPH)			
	25	30	35	40
8	40	40	60	90
10	40	60	90	90
USE A MINIMUM 3 DEVICES TAPER FOR SHOULDER LESS THEN 8'.				

SIGN SPACING = X (1)		
PRINCIPAL, MINOR OR COLLECTOR ARTERIALS	35/40 MPH	350'±
PRINCIPAL, MINOR, COLLECTOR ARTERIALS, INDUSTRIAL AND LOCAL ACCESS ROADWAYS	25/30 MPH	200'± (2)
INDUSTRIAL AND LOCAL ACCESS ROADWAYS	25 MPH OR LESS	100'± (2)

(1) ALL SPACING MAY BE ADJUSTED TO ACCOMMODATE INTERSECTIONS AND DRIVEWAYS.

(2) THIS SPACING MAY BE REDUCED IN URBAN AREAS TO FIT ROADWAY CONDITIONS.

BUFFER DATA				
LONGITUDINAL BUFFER SPACE = B				
SPEED (MPH)	25	30	35	40
LENGTH (FEET)	155	200	250	305
BUFFER VEHICLE ROLL AHEAD DISTANCE = R				
TRANSPORTABLE ATTENUATOR MINIMUM HOST VEHICLE WEIGHT 15,000 LBS. THE MAXIMUM WEIGHT SHALL BE IN ACCORDANCE WITH THE MANUFACTURERS RECOMMENDATION.	30 FEET MIN. TO 100 FEET MAX.			
PROTECTIVE VEHICLE MAY BE A WORK VEHICLE STRATEGICALLY LOCATED TO SHIELD THE WORK AREA.	NO SPECIFIED DISTANCE REQUIRED			

CHANNELIZATION DEVICE SPACING (FEET)		
MPH	TAPER	TANGENT
35/40	30	60
25/30	20	40

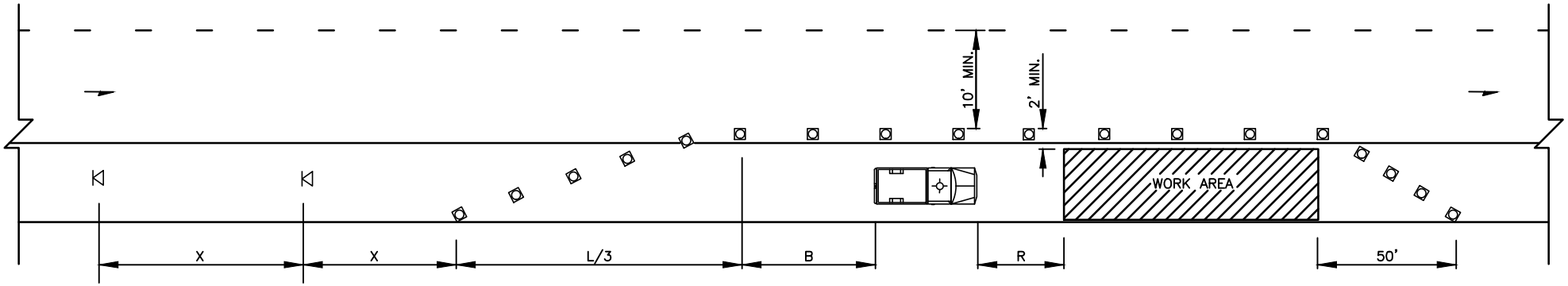

W20–1

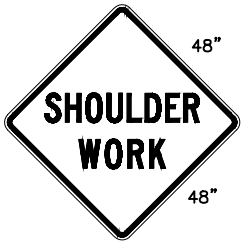

W21–5

LEGEND

TEMPORARY SIGN LOCATION

CHANNELIZING DEVICES

PROTECTIVE VEHICLE

NOTES:

1. DEVICE SPACING FOR THE DOWNSTREAM TAPER SHALL BE 20' (FT).
2. ALL SIGNS ARE BLACK ON ORANGE.

REV NO.	DATE	BY	APPR
1	3/16	RAW	CJC
2	9/21	RAW	CJC

PUBLIC WORKS – STREETS AND TRANSPORTATION

APPROVED BY: TRAFFIC ENGINEER MANAGER

APPROVED DATE: 9/1/2021

CITY OF Vancouver WASHINGTON

TRAFFIC CONTROL STANDARD PLAN
SHOULDER CLOSURE LOW SPEED (40 MPH OR LESS)

STANDARD PLAN NUMBER

TC5

I:\CITYAPPS\AUTOCAD\STD_DETAILS\DRAWING_FILES\TC6_COV

MINIMUM SHOULDER TAPER LENGTH = L/3 (FEET)					
SHOULDER WIDTH (FEET)	POSTED SPEED (MPH)				
	25	30	35	40	45
8	–	–	–	–	120
10	–	–	–	–	150
USE A MINIMUM 3 DEVICES TAPER FOR SHOULDER LESS THEN 8'.					

SIGN SPACING = X (1)		
PRINCIPAL ARTERIALS	45 MPH	500'±
(1) ALL SPACING MAY BE ADJUSTED TO ACCOMMODATE INTERSECTIONS AND DRIVEWAYS.		

CHANNELIZATION DEVICE SPACING (FEET)		
MPH	TAPER	TANGENT
45	30	60

BUFFER DATA					
LONGITUDINAL BUFFER SPACE = B					
SPEED (MPH)	25	30	35	40	45
LENGTH (FEET)	–	–	–	–	360
BUFFER VEHICLE ROLL AHEAD DISTANCE = R					
TRANSPORTABLE ATTENUATOR MINIMUM HOST VEHICLE WEIGHT 15,000 LBS. THE MAXIMUM WEIGHT SHALL BE IN ACCORDANCE WITH THE MANUFACTURERS RECOMMENDATION.					30 FEET MIN. TO 100 FEET MAX.
PROTECTIVE VEHICLE MAY BE A WORK VEHICLE STRATEGICALLY LOCATED TO SHIELD THE WORK AREA.					NO SPECIFIED DISTANCE REQUIRED

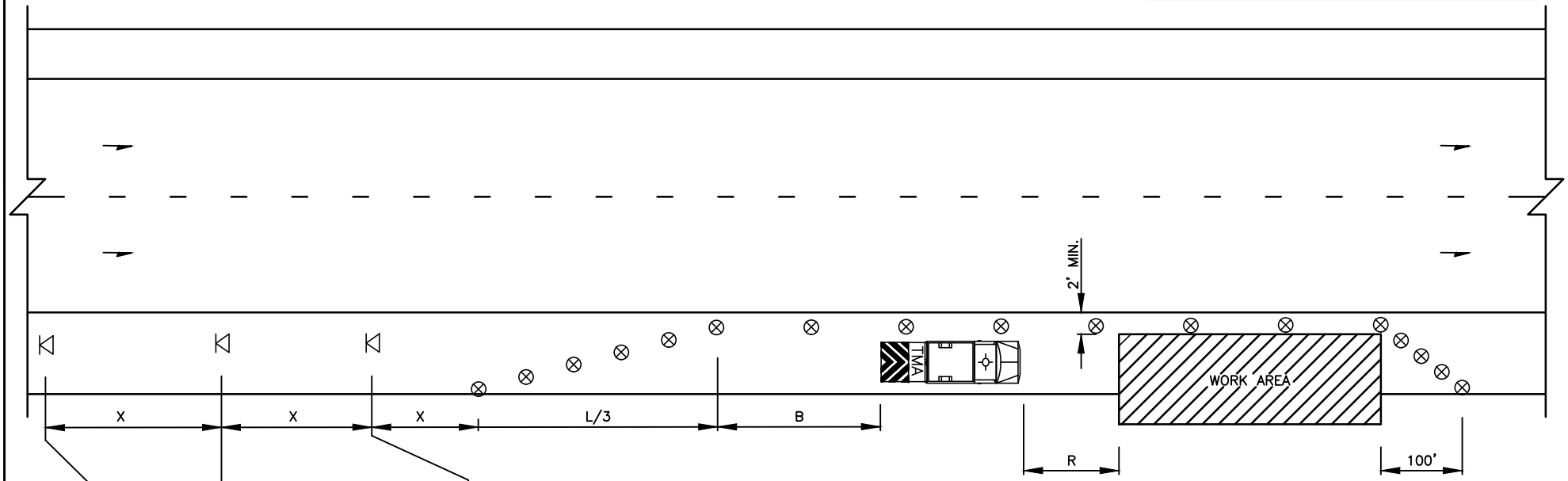

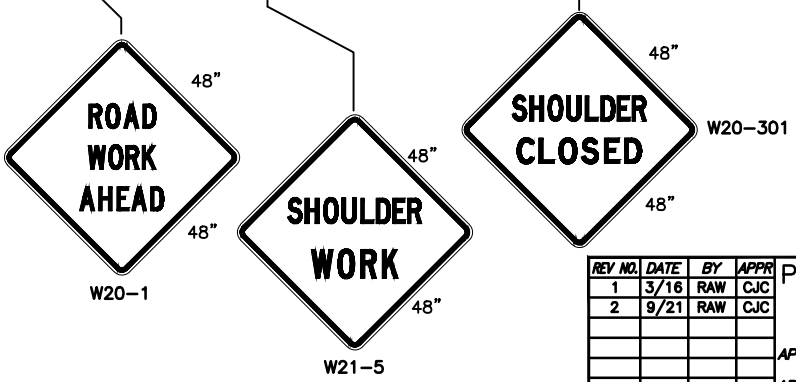

LEGEND

- TEMPORARY SIGN LOCATION
- TRAFFIC SAFETY DRUM
- TRANSPORTABLE ATTENUATOR

NOTES:

1. NO ENCROACHMENT IN TRAVELED LANE. IF ENCROACHMENT IS NECESSARY, LANE SHALL BE CLOSED.
2. DEVICE SPACING FOR THE DOWNSTREAM TAPER SHALL BE 20' (FT) O.C.
3. ALL SIGNS ARE BLACK ON ORANGE.

REV NO.	DATE	BY	APPR
1	3/16	RAW	CJC
2	9/21	RAW	CJC

PUBLIC WORKS – STREETS AND TRANSPORTATION

APPROVED BY: TRAFFIC ENGINEER MANAGER

APPROVED DATE: 9/1/2021

CITY OF Vancouver WASHINGTON

TRAFFIC CONTROL STANDARD PLAN
SHOULDER CLOSURE
HIGH SPEED

STANDARD PLAN NUMBER

TC6

I:\CITYAPPS\AUTOCAD\STD_DETAILS\DRAWING_FILES\TC7_COV

BUFFER DATA					
LONGITUDINAL BUFFER SPACE = B					
SPEED (MPH)	25	30	35	40	45
LENGTH (FEET)	155	200	250	305	360
BUFFER VEHICLE ROLL AHEAD DISTANCE = R					
TRANSPORTABLE ATTENUATOR MINIMUM HOST VEHICLE WEIGHT 15,000 LBS. THE MAXIMUM WEIGHT SHALL BE IN ACCORDANCE WITH THE MANUFACTURERS RECOMMENDATION.					30 FEET MIN. TO 100 FEET MAX.
PROTECTIVE VEHICLE MAY BE A WORK VEHICLE STRATEGICALLY LOCATED TO SHIELD THE WORK AREA.					NO SPECIFIED DISTANCE REQUIRED

SIGN SPACING = X (1)		
PRINCIPAL ARTERIALS	45 MPH	500'±
PRINCIPAL, MINOR OR COLLECTOR ARTERIALS	35/40 MPH	350'±
PRINCIPAL, MINOR, COLLECTOR ARTERIALS, INDUSTRIAL AND LOCAL ACCESS ROADWAYS	25/30 MPH	200'± (2)
INDUSTRIAL AND LOCAL ACCESS ROADWAYS	25 MPH OR LESS	100'± (2)

(1) ALL SPACING MAY BE ADJUSTED TO ACCOMMODATE INTERSECTIONS AND DRIVEWAYS.

(2) THIS SPACING MAY BE REDUCED IN URBAN AREAS TO FIT ROADWAY CONDITIONS.

MINIMUM LANE CLOSURE TAPER LENGTH = L (FEET)					
LANE WIDTH (FEET)	POSTED SPEED (MPH)				
	25	30	35	40	45
10	105	150	205	270	450
11	115	165	225	295	495
12	125	180	245	320	540

MINIMUM SHOULDER TAPER LENGTH = L/3 (FEET)					
SHOULDER WIDTH (FEET)	POSTED SPEED (MPH)				
	25	30	35	40	45
8	40	40	60	90	120
10	40	60	90	90	150
USE A MINIMUM 3 DEVICES TAPER FOR SHOULDER LESS THEN 8'.					

PCMS	
1	2
RIGHT LANE CLOSURE	1 MILE AHEAD
2.0 SEC	2.0 SEC

CHANNELIZATION DEVICE SPACING (FEET)		
MPH	TAPER	TANGENT
35/45	30	60
25/30	20	40

FIELD LOCATE 1 MILE ± IN ADVANCE OF LANE CLOSURE SIGNING.

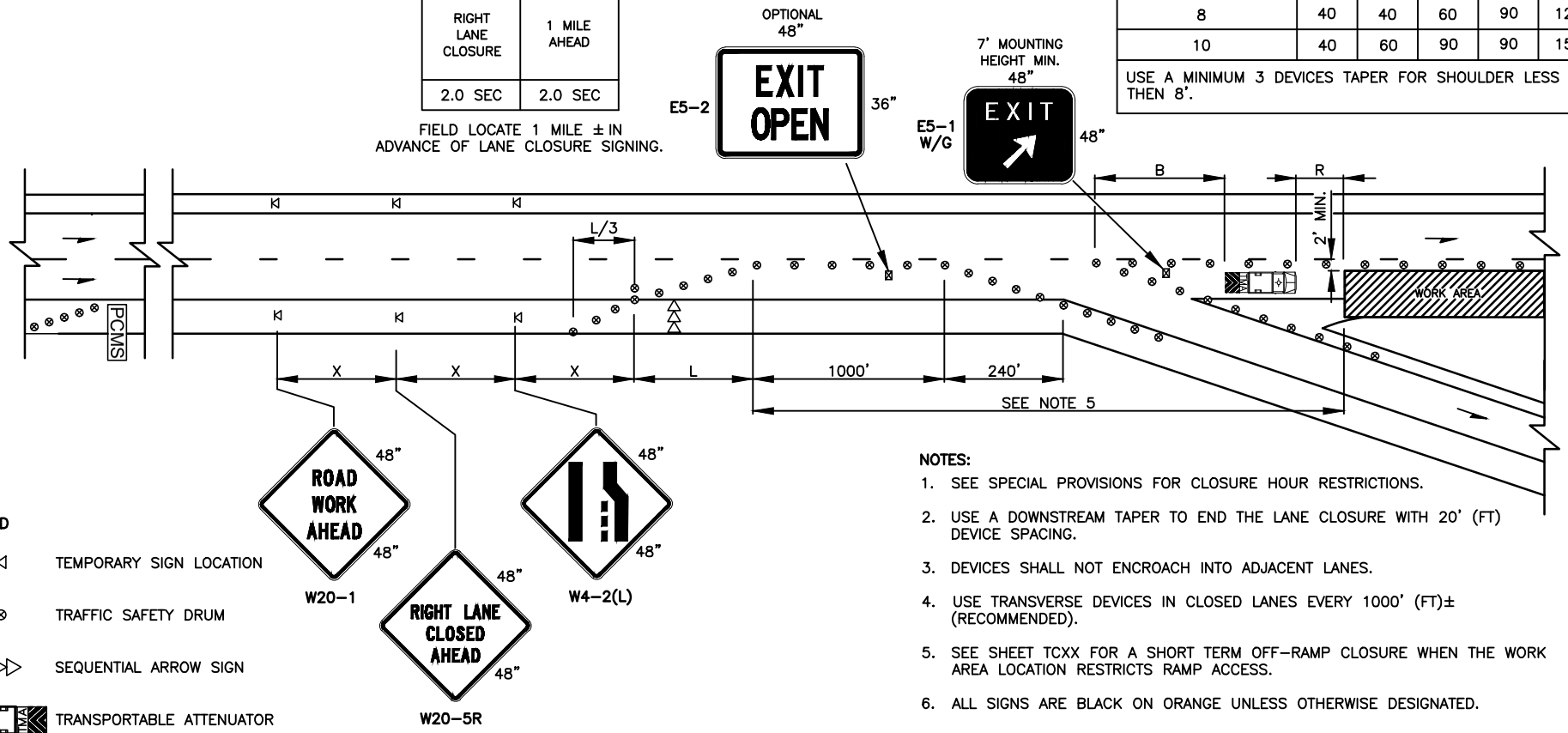

LEGEND

- TEMPORARY SIGN LOCATION
- TRAFFIC SAFETY DRUM
- SEQUENTIAL ARROW SIGN
- TRANSPORTABLE ATTENUATOR
- PCMS — PORTABLE CHANGEABLE MESSAGE SIGN
- TEMPORARY SIGN LOCATION (5' MOUNTING HEIGHT)

NOTES:

1. SEE SPECIAL PROVISIONS FOR CLOSURE HOUR RESTRICTIONS.
2. USE A DOWNSTREAM TAPER TO END THE LANE CLOSURE WITH 20' (FT) DEVICE SPACING.
3. DEVICES SHALL NOT ENCROACH INTO ADJACENT LANES.
4. USE TRANSVERSE DEVICES IN CLOSED LANES EVERY 1000' (FT)± (RECOMMENDED).
5. SEE SHEET TCXX FOR A SHORT TERM OFF-RAMP CLOSURE WHEN THE WORK AREA LOCATION RESTRICTS RAMP ACCESS.
6. ALL SIGNS ARE BLACK ON ORANGE UNLESS OTHERWISE DESIGNATED.

REV NO.	DATE	BY	APPR
1	3/16	RAW	CJC
2	9/21	RAW	CJC

PUBLIC WORKS – STREETS AND TRANSPORTATION

APPROVED BY: TRAFFIC ENGINEER MANAGER

APPROVED DATE: 9/1/2021

CITY OF Vancouver WASHINGTON

TRAFFIC CONTROL STANDARD PLAN
TEMPORARY OFF-RAMP FOR MULTI-LANE ROADWAYS

STANDARD PLAN NUMBER

TC7

I:\CITYAPPS\AUTOCAD\STD_DETAILS\DRAWING_FILES\TC8_COV

BUFFER DATA					
LONGITUDINAL BUFFER SPACE = B					
SPEED (MPH)	25	30	35	40	45
LENGTH (FEET)	155	200	250	305	360
BUFFER VEHICLE ROLL AHEAD DISTANCE = R					
TRANSPORTABLE ATTENUATOR MINIMUM HOST VEHICLE WEIGHT 15,000 LBS. THE MAXIMUM WEIGHT SHALL BE IN ACCORDANCE WITH THE MANUFACTURERS RECOMMENDATION.					30 FEET MIN. TO 100 FEET MAX.
PROTECTIVE VEHICLE MAY BE A WORK VEHICLE STRATEGICALLY LOCATED TO SHIELD THE WORK AREA.					NO SPECIFIED DISTANCE REQUIRED

SIGN SPACING = X (1)		
PRINCIPAL ARTERIALS	45 MPH	500'±
PRINCIPAL, MINOR OR COLLECTOR ARTERIALS	35/40 MPH	350'±
PRINCIPAL, MINOR, COLLECTOR ARTERIALS, INDUSTRIAL AND LOCAL ACCESS ROADWAYS	25/30 MPH	200'± (2)
INDUSTRIAL AND LOCAL ACCESS ROADWAYS	25 MPH OR LESS	100'± (2)

(1) ALL SPACING MAY BE ADJUSTED TO ACCOMMODATE INTERSECTIONS AND DRIVEWAYS.

(2) THIS SPACING MAY BE REDUCED IN URBAN AREAS TO FIT ROADWAY CONDITIONS.

MINIMUM LANE CLOSURE TAPER LENGTH = L (FEET)					
LANE WIDTH (FEET)	POSTED SPEED (MPH)				
	25	30	35	40	45
10	105	150	205	270	450
11	115	165	225	295	495
12	125	180	245	320	540

MINIMUM SHOULDER TAPER LENGTH = L/3 (FEET)					
SHOULDER WIDTH (FEET)	POSTED SPEED (MPH)				
	25	30	35	40	45
8	40	40	60	90	120
10	40	60	90	90	150
USE A MINIMUM 3 DEVICES TAPER FOR SHOULDER LESS THEN 8'.					

CHANNELIZATION DEVICE SPACING (FEET)		
MPH	TAPER	TANGENT
35/45	30	60
25/30	20	40

PCMS	
1	2
RIGHT LANE CLOSURE	1 MILE AHEAD
2.0 SEC	2.0 SEC

FIELD LOCATE 1 MILE ± IN ADVANCE OF LANE CLOSURE SIGNING.

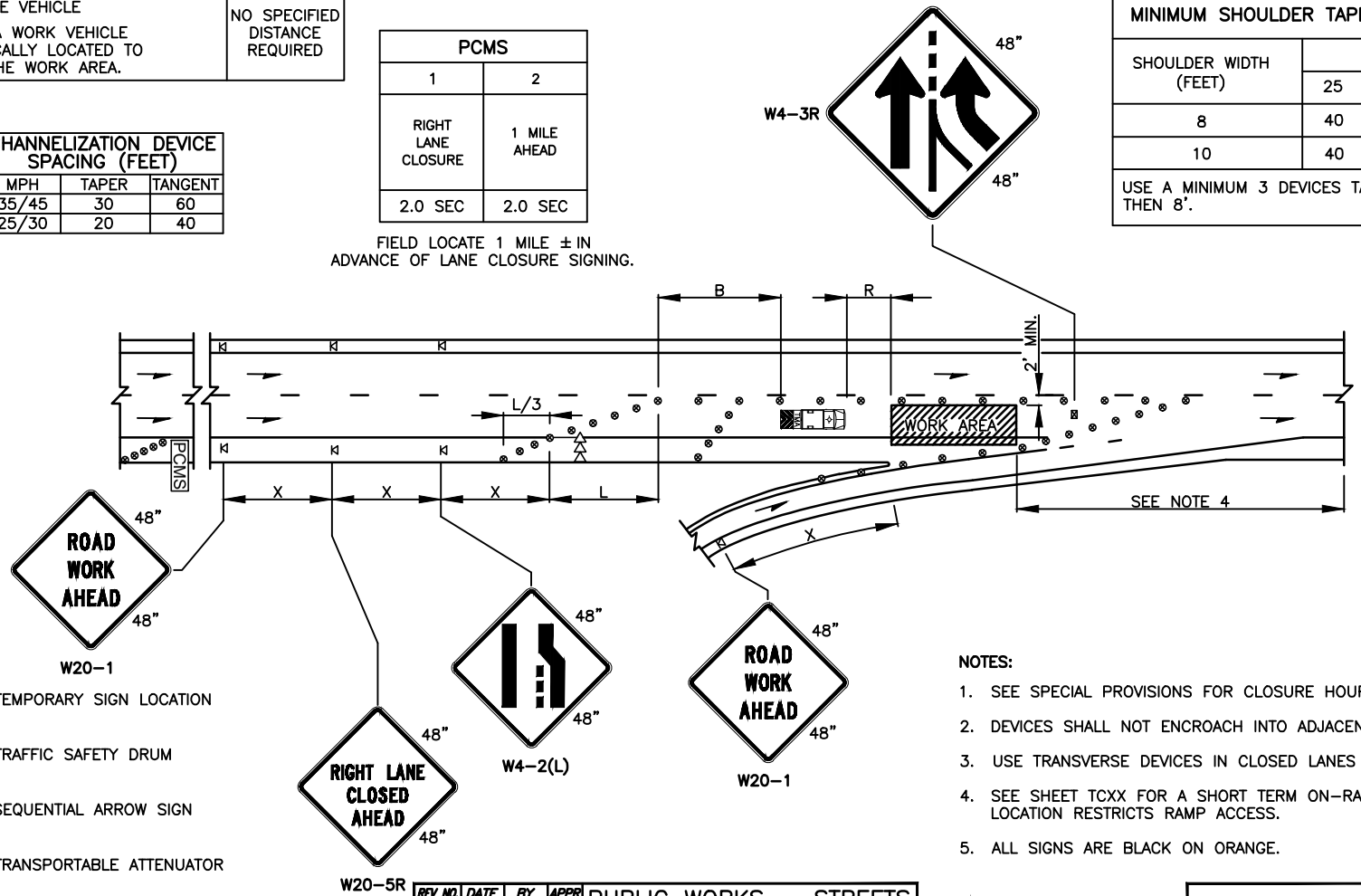

LEGEND

- TEMPORARY SIGN LOCATION
- TRAFFIC SAFETY DRUM
- SEQUENTIAL ARROW SIGN
- TRANSPORTABLE ATTENUATOR
- PCMS — PORTABLE CHANGEABLE MESSAGE SIGN
- TEMPORARY SIGN LOCATION (5' MOUNTING HEIGHT)

NOTES:

1. SEE SPECIAL PROVISIONS FOR CLOSURE HOUR RESTRICTIONS.
2. DEVICES SHALL NOT ENCROACH INTO ADJACENT LANES.
3. USE TRANSVERSE DEVICES IN CLOSED LANES EVERY 1000'± (RECOMMENDED).
4. SEE SHEET TCXX FOR A SHORT TERM ON-RAMP CLOSURE WHEN THE WORK AREA LOCATION RESTRICTS RAMP ACCESS.
5. ALL SIGNS ARE BLACK ON ORANGE.

REV NO.	DATE	BY	APPR
1	3/16	RAW	CJC
2	9/21	RAW	CJC

PUBLIC WORKS – STREETS AND TRANSPORTATION

APPROVED BY: TRAFFIC ENGINEER MANAGER

APPROVED DATE: 9/1/2021

CITY OF Vancouver WASHINGTON

TRAFFIC CONTROL STANDARD PLAN
TEMPORARY ON-RAMP FOR MULTI-LANE ROADWAYS

STANDARD PLAN NUMBER

TC8

I:\CITYAPPS\AUTOCAD\STD_DETAILS\DRAWING_FILES\TC9_COV

BUFFER DATA					
LONGITUDINAL BUFFER SPACE = B					
SPEED (MPH)	25	30	35	40	45
LENGTH (FEET)	155	200	250	305	360
BUFFER VEHICLE ROLL AHEAD DISTANCE = R					
TRANSPORTABLE ATTENUATOR MINIMUM HOST VEHICLE WEIGHT 15,000 LBS. THE MAXIMUM WEIGHT SHALL BE IN ACCORDANCE WITH THE MANUFACTURERS RECOMMENDATION.					30 FEET MIN. TO 100 FEET MAX.
PROTECTIVE VEHICLE MAY BE A WORK VEHICLE STRATEGICALLY LOCATED TO SHIELD THE WORK AREA.					NO SPECIFIED DISTANCE REQUIRED

SIGN SPACING = X (1)		
PRINCIPAL ARTERIALS	45 MPH	500'±
PRINCIPAL, MINOR OR COLLECTOR ARTERIALS	35/40 MPH	350'±
PRINCIPAL, MINOR, COLLECTOR ARTERIALS, INDUSTRIAL AND LOCAL ACCESS ROADWAYS	25/30 MPH	200'± (2)
INDUSTRIAL AND LOCAL ACCESS ROADWAYS	25 MPH OR LESS	100'± (2)

(1) ALL SPACING MAY BE ADJUSTED TO ACCOMMODATE INTERSECTIONS AND DRIVEWAYS.

(2) THIS SPACING MAY BE REDUCED IN URBAN AREAS TO FIT ROADWAY CONDITIONS.

CHANNELIZATION DEVICE SPACING (FEET)		
MPH	TAPER	TANGENT
35/45	30	60
25/30	20	40

MINIMUM LANE CLOSURE TAPER LENGTH = L (FEET)					
LANE WIDTH (FEET)	POSTED SPEED (MPH)				
	25	30	35	40	45
10	105	150	205	270	450
11	115	165	225	295	495
12	125	180	245	320	540

MINIMUM SHOULDER TAPER LENGTH = L/3 (FEET)					
SHOULDER WIDTH (FEET)	POSTED SPEED (MPH)				
	25	30	35	40	45
8	40	40	60	90	120
10	40	60	90	90	150
USE A MINIMUM 3 DEVICES TAPER FOR SHOULDER LESS THEN 8'.					

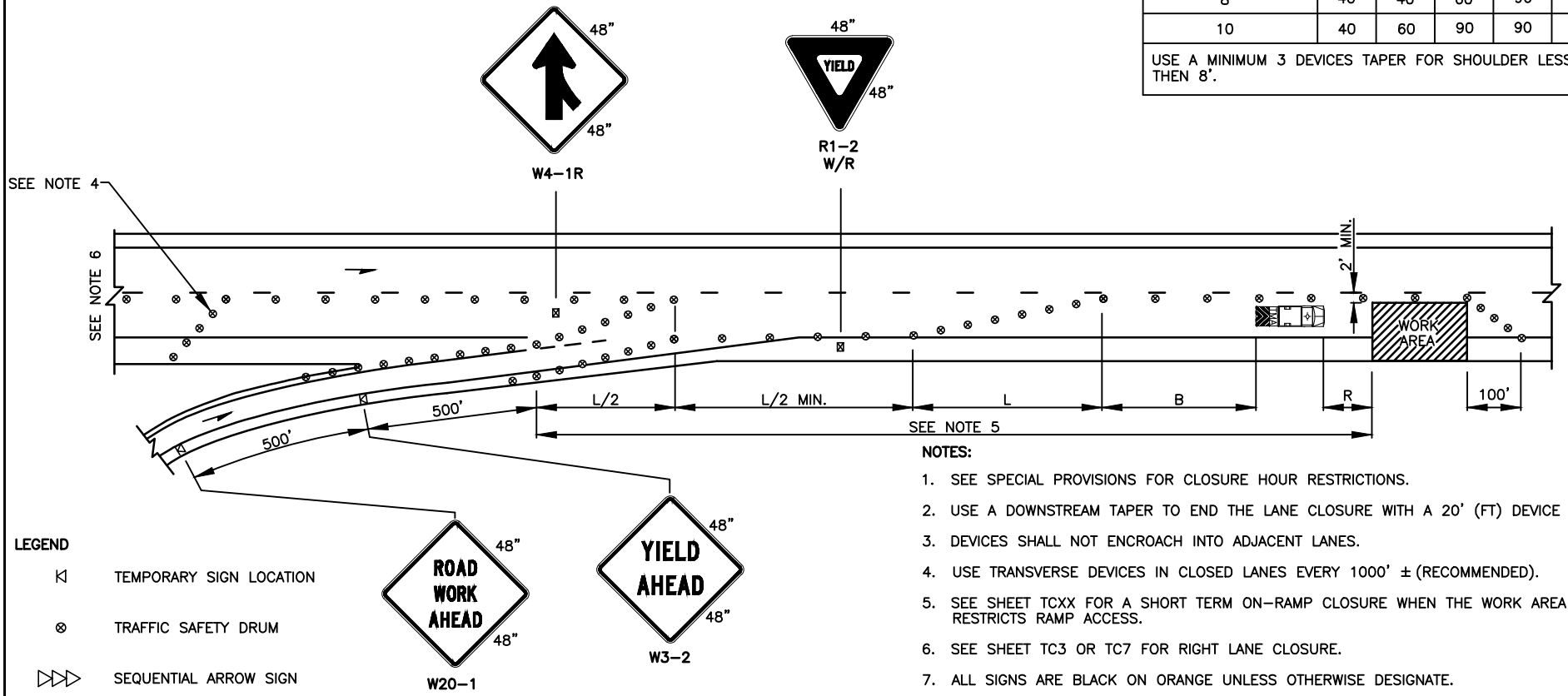

NOTES:

1. SEE SPECIAL PROVISIONS FOR CLOSURE HOUR RESTRICTIONS.
2. USE A DOWNSTREAM TAPER TO END THE LANE CLOSURE WITH A 20' (FT) DEVICE SPACING.
3. DEVICES SHALL NOT ENCROACH INTO ADJACENT LANES.
4. USE TRANSVERSE DEVICES IN CLOSED LANES EVERY 1000' ± (RECOMMENDED).
5. SEE SHEET TCXX FOR A SHORT TERM ON-RAMP CLOSURE WHEN THE WORK AREA LOCATION RESTRICTS RAMP ACCESS.
6. SEE SHEET TC3 OR TC7 FOR RIGHT LANE CLOSURE.
7. ALL SIGNS ARE BLACK ON ORANGE UNLESS OTHERWISE DESIGNATE.

LEGEND

- TEMPORARY SIGN LOCATION
- TRAFFIC SAFETY DRUM
- SEQUENTIAL ARROW SIGN
- TRANSPORTABLE ATTENUATOR
- TEMPORARY SIGN LOCATION (5' MOUNTING HEIGHT)

REV NO.	DATE	BY	APPR
1	3/16	RAW	CJC
2	9/21	RAW	CJC

PUBLIC WORKS – STREETS AND TRANSPORTATION

APPROVED BY: TRAFFIC ENGINEER MANAGER

APPROVED DATE: 9/1/2021

CITY OF Vancouver WASHINGTON

TRAFFIC CONTROL STANDARD PLAN
TEMPORARY ON-RAMP FOR MULTI-LANE ROADWAYS

STANDARD PLAN NUMBER

TC9

I:\CITYAPPS\AUTOCAD\STD_DETAILS\DRAWING_FILES\TC10_COV

BUFFER DATA					
LONGITUDINAL BUFFER SPACE = B					
SPEED (MPH)	25	30	35	40	45
LENGTH (FEET)	155	200	250	305	360
BUFFER VEHICLE ROLL AHEAD DISTANCE = R					
TRANSPORTABLE ATTENUATOR MINIMUM HOST VEHICLE WEIGHT 15,000 LBS. THE MAXIMUM WEIGHT SHALL BE IN ACCORDANCE WITH THE MANUFACTURERS RECOMMENDATION.					30 FEET MIN. TO 100 FEET MAX.
PROTECTIVE VEHICLE MAY BE A WORK VEHICLE STRATEGICALLY LOCATED TO SHIELD THE WORK AREA.					NO SPECIFIED DISTANCE REQUIRED

SIGN SPACING = X (1)		
PRINCIPAL ARTERIALS	45 MPH	500'±
PRINCIPAL, MINOR OR COLLECTOR ARTERIALS	35/40 MPH	350'±
PRINCIPAL, MINOR, COLLECTOR ARTERIALS, INDUSTRIAL AND LOCAL ACCESS ROADWAYS	25/30 MPH	200'± (2)
INDUSTRIAL AND LOCAL ACCESS ROADWAYS	25 MPH OR LESS	100'± (2)

(1) ALL SPACING MAY BE ADJUSTED TO ACCOMMODATE INTERSECTIONS AND DRIVEWAYS.

(2) THIS SPACING MAY BE REDUCED IN URBAN AREAS TO FIT ROADWAY CONDITIONS.

MINIMUM LANE CLOSURE TAPER LENGTH = L (FEET)					
LANE WIDTH (FEET)	POSTED SPEED (MPH)				
	25	30	35	40	45
10	105	150	205	270	450
11	115	165	225	295	495
12	125	180	245	320	540

PCMS #1	
1	2
RIGHT LANE CLOSURE	1 MILE AHEAD
2.0 SEC	2.0 SEC

FIELD LOCATE IN ADVANCE OF TEMPORARY SIGNS.

PCMS #2	
1	2
CENTER LANE CLOSED	NO LEFT TURNING
2.0 SEC	2.0 SEC

FIELD LOCATE IN ADVANCE OF TEMPORARY SIGNS.

CHANNELIZATION DEVICE SPACING (FEET)		
MPH	TAPER	TANGENT
35/45	30	60
25/30	20	40

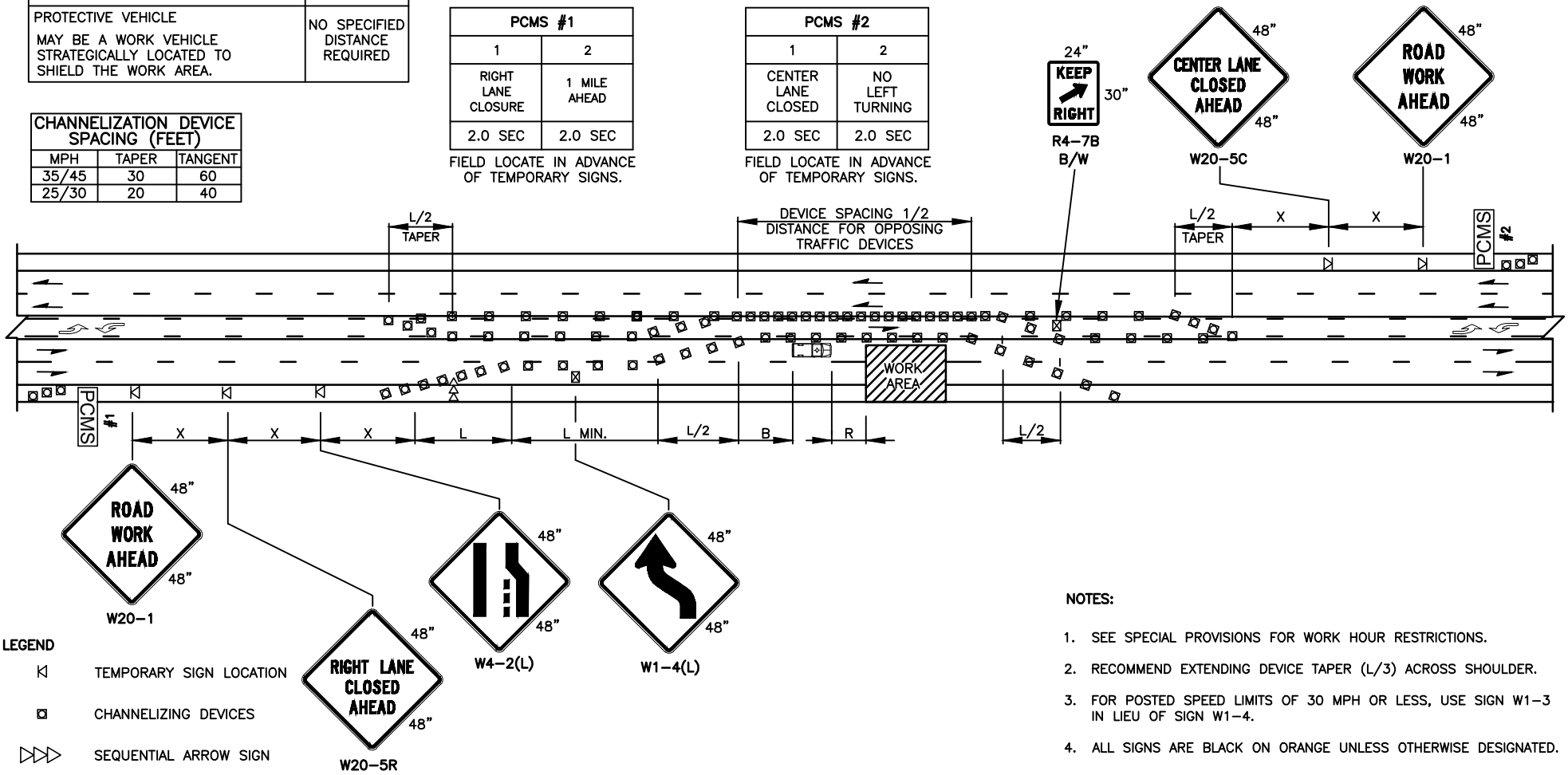

LEGEND

- TEMPORARY SIGN LOCATION
- CHANNELIZING DEVICES
- SEQUENTIAL ARROW SIGN
- PROTECTIVE VEHICLE
- PCMS — PORTABLE CHANGEABLE MESSAGE SIGN
- TEMPORARY SIGN LOCATION (5' MOUNTING HEIGHT)

NOTES:

1. SEE SPECIAL PROVISIONS FOR WORK HOUR RESTRICTIONS.
2. RECOMMEND EXTENDING DEVICE TAPER (L/3) ACROSS SHOULDER.
3. FOR POSTED SPEED LIMITS OF 30 MPH OR LESS, USE SIGN W1-3 IN LIEU OF SIGN W1-4.
4. ALL SIGNS ARE BLACK ON ORANGE UNLESS OTHERWISE DESIGNATED.

REV NO.	DATE	BY	APPR
1	3/16	RAW	CJC
2	3/17	RAW	CJC
3	9/21	RAW	CJC

PUBLIC WORKS – STREETS AND TRANSPORTATION

APPROVED BY: TRAFFIC ENGINEER MANAGER

APPROVED DATE: 9/1/2021

CITY OF Vancouver WASHINGTON

TRAFFIC CONTROL STANDARD PLAN
RIGHT LANE CLOSURE WITH SHIFT 5 LANE ROADWAYS

STANDARD PLAN NUMBER

TC10

I:\CITYAPPS\AUTOCAD\STD_DETAILS\DRAWING_FILES\TC11_COV

BUFFER DATA					
LONGITUDINAL BUFFER SPACE = B					
SPEED (MPH)	25	30	35	40	45
LENGTH (FEET)	155	200	250	305	360
BUFFER VEHICLE ROLL AHEAD DISTANCE = R					
TRANSPORTABLE ATTENUATOR MINIMUM HOST VEHICLE WEIGHT 15,000 LBS. THE MAXIMUM WEIGHT SHALL BE IN ACCORDANCE WITH THE MANUFACTURERS RECOMMENDATION.					30 FEET MIN. TO 100 FEET MAX.
PROTECTIVE VEHICLE MAY BE A WORK VEHICLE STRATEGICALLY LOCATED TO SHIELD THE WORK AREA.					NO SPECIFIED DISTANCE REQUIRED

SIGN SPACING = X (1)		
PRINCIPAL ARTERIALS	45 MPH	500'±
PRINCIPAL, MINOR OR COLLECTOR ARTERIALS	35/40 MPH	350'±
PRINCIPAL, MINOR, COLLECTOR ARTERIALS, INDUSTRIAL AND LOCAL ACCESS ROADWAYS	25/30 MPH	200'± (2)
INDUSTRIAL AND LOCAL ACCESS ROADWAYS	25 MPH OR LESS	100'± (2)

(1) ALL SPACING MAY BE ADJUSTED TO ACCOMMODATE INTERSECTIONS AND DRIVEWAYS.

(2) THIS SPACING MAY BE REDUCED IN URBAN AREAS TO FIT ROADWAY CONDITIONS.

MINIMUM LANE CLOSURE TAPER LENGTH = L (FEET)					
LANE WIDTH (FEET)	POSTED SPEED (MPH)				
	25	30	35	40	45
10	105	150	205	270	450
11	115	165	225	295	495
12	125	180	245	320	540

CHANNELIZATION DEVICE SPACING (FEET)		
MPH	TAPER	TANGENT
35/45	30	60
25/30	20	40

PCMS	
1	2
CENTER LANE CLOSURE	NO LEFT TURNING
2.0 SEC	2.0 SEC

FIELD LOCATE IN ADVANCE OF TEMPORARY SIGNS.

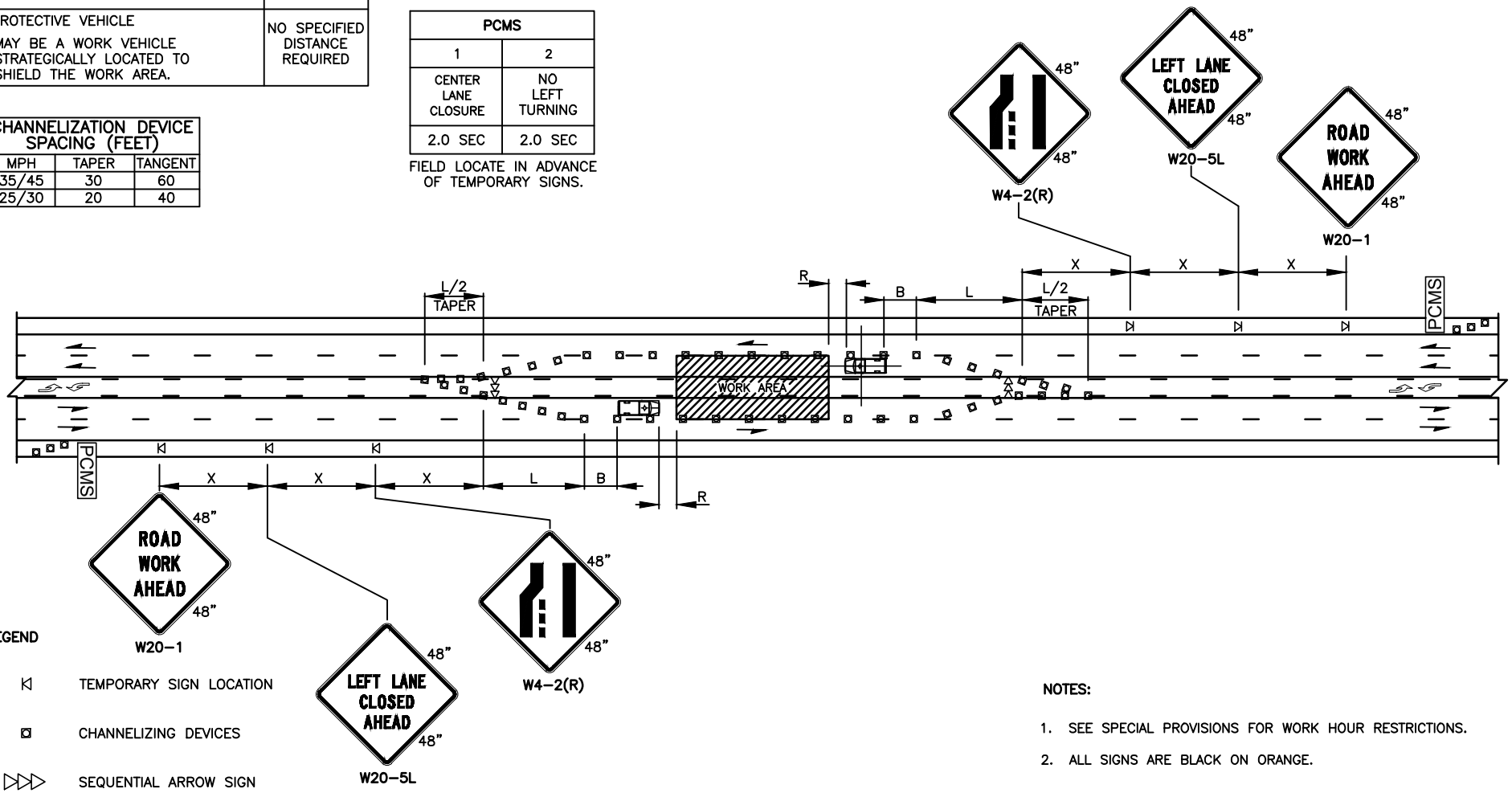

LEGEND

- TEMPORARY SIGN LOCATION
- CHANNELIZING DEVICES
- SEQUENTIAL ARROW SIGN
- PROTECTIVE VEHICLE
- PCMS — PORTABLE CHANGEABLE MESSAGE SIGN

NOTES:

1. SEE SPECIAL PROVISIONS FOR WORK HOUR RESTRICTIONS.
2. ALL SIGNS ARE BLACK ON ORANGE.

REV NO.	DATE	BY	APPR
1	3/16	RAW	CJC
2	3/17	RAW	CJC
3	9/21	RAW	CJC

PUBLIC WORKS – STREETS AND TRANSPORTATION

APPROVED BY: TRAFFIC ENGINEER MANAGER

APPROVED DATE: 9/1/2021

CITY OF Vancouver WASHINGTON

TRAFFIC CONTROL STANDARD PLAN
LEFT LANE AND CENTER TURN LANE
5 LANE ROADWAYS

STANDARD PLAN NUMBER

TC11

I:\CITYAPPS\AUTOCAD\STD_DETAILS\DRAWING_FILES\TC12_COV

BUFFER DATA					
LONGITUDINAL BUFFER SPACE = B					
SPEED (MPH)	25	30	35	40	45
LENGTH (FEET)	155	200	250	305	360
BUFFER VEHICLE ROLL AHEAD DISTANCE = R					
TRANSPORTABLE ATTENUATOR MINIMUM HOST VEHICLE WEIGHT 15,000 LBS. THE MAXIMUM WEIGHT SHALL BE IN ACCORDANCE WITH THE MANUFACTURERS RECOMMENDATION.					30 FEET MIN. TO 100 FEET MAX.
PROTECTIVE VEHICLE MAY BE A WORK VEHICLE STRATEGICALLY LOCATED TO SHIELD THE WORK AREA.					NO SPECIFIED DISTANCE REQUIRED

SIGN SPACING = X (1)		
PRINCIPAL ARTERIALS	45 MPH	500'±
PRINCIPAL, MINOR OR COLLECTOR ARTERIALS	35/40 MPH	350'±
PRINCIPAL, MINOR, COLLECTOR ARTERIALS, INDUSTRIAL AND LOCAL ACCESS ROADWAYS	25/30 MPH	200'± (2)
INDUSTRIAL AND LOCAL ACCESS ROADWAYS	25 MPH OR LESS	100'± (2)

(1) ALL SPACING MAY BE ADJUSTED TO ACCOMMODATE INTERSECTIONS AND DRIVEWAYS.

(2) THIS SPACING MAY BE REDUCED IN URBAN AREAS TO FIT ROADWAY CONDITIONS.

MINIMUM LANE CLOSURE TAPER LENGTH = L (FEET)					
LANE WIDTH (FEET)	POSTED SPEED (MPH)				
	25	30	35	40	45
10	105	150	205	270	450
11	115	165	225	295	495
12	125	180	245	320	540

PCMS #1	
1	2
CENTER LANE CLOSURE	1 MILE AHEAD
2.0 SEC	2.0 SEC

FIELD LOCATE IN ADVANCE OF TEMPORARY SIGNS.

PCMS #2	
1	2
LANE SHIFTS LEFT	1 MILE AHEAD
2.0 SEC	2.0 SEC

FIELD LOCATE IN ADVANCE OF TEMPORARY SIGNS.

CHANNELIZATION DEVICE SPACING (FEET)		
MPH	TAPER	TANGENT
35/45	30	60
25/30	20	40

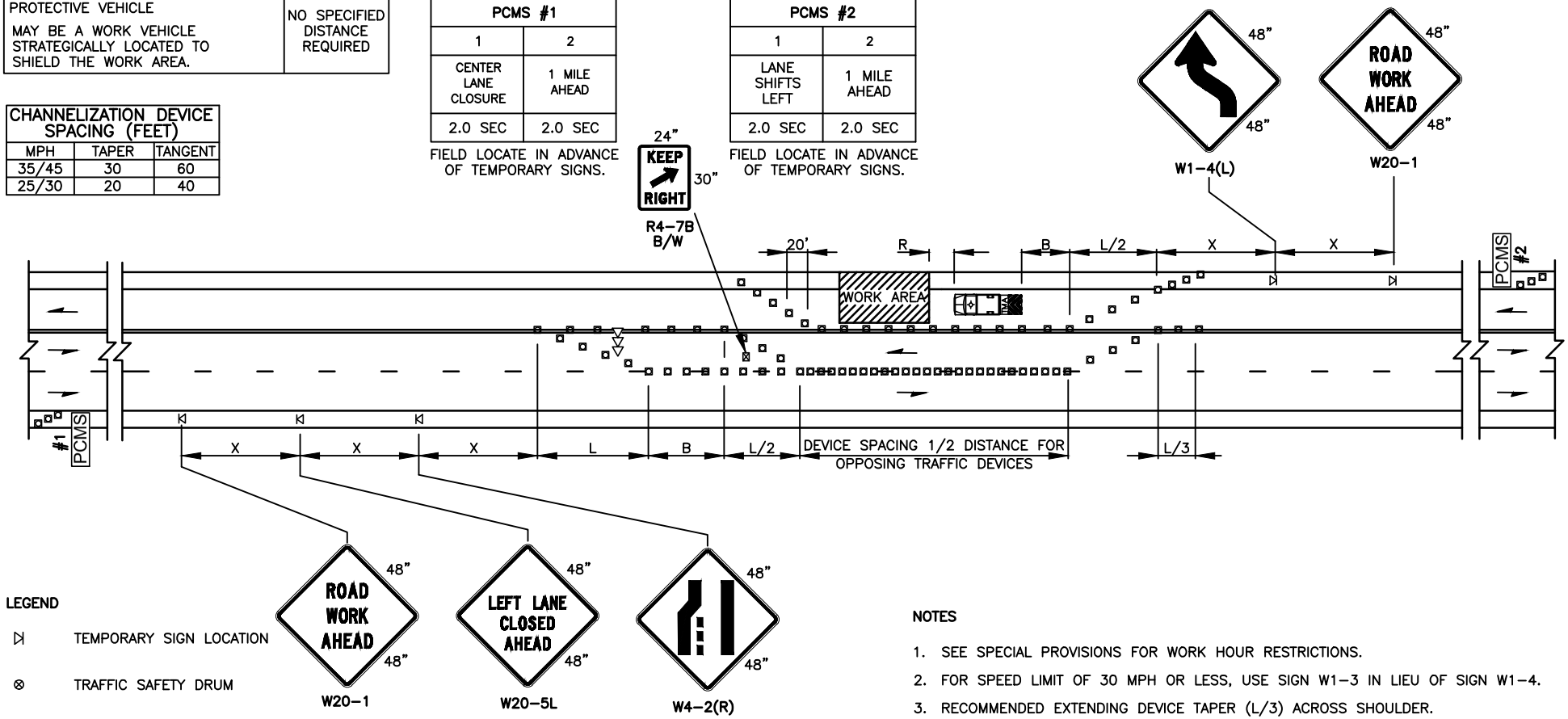

LEGEND

- TEMPORARY SIGN LOCATION
- TRAFFIC SAFETY DRUM
- SEQUENTIAL ARROW SIGN
- TRANSPORTABLE ATTENUATOR
- PCMS — PORTABLE CHANGEABLE MESSAGE SIGN
- TEMPORARY SIGN LOCATION (5' (FT.) MOUNTING HEIGHT)

NOTES

1. SEE SPECIAL PROVISIONS FOR WORK HOUR RESTRICTIONS.
2. FOR SPEED LIMIT OF 30 MPH OR LESS, USE SIGN W1-3 IN LIEU OF SIGN W1-4.
3. RECOMMENDED EXTENDING DEVICE TAPER (L/3) ACROSS SHOULDER.
4. ALL SIGNS ARE BLACK ON ORANGE UNLESS OTHERWISE DESIGNATED.

REV NO.	DATE	BY	APPR
1	3/16	RAW	CJC
2	3/17	RAW	CJC
3	9/21	RAW	CJC

PUBLIC WORKS – STREETS AND TRANSPORTATION

APPROVED BY: TRAFFIC ENGINEER MANAGER

APPROVED DATE: 9/1/2021

CITY OF Vancouver WASHINGTON

TRAFFIC CONTROL STANDARD PLAN
LANE SHIFT
3 LANE ROADWAYS

STANDARD PLAN NUMBER

TC12

I:\CITYAPPS\AUTOCAD\STD_DETAILS\DRAWING_FILES\TC13_COV

SIGN SPACING = X (1)		
PRINCIPAL ARTERIALS	45 MPH	500'±
PRINCIPAL, MINOR OR COLLECTOR ARTERIALS	35/40 MPH	350'±
PRINCIPAL, MINOR, COLLECTOR ARTERIALS, INDUSTRIAL AND LOCAL ACCESS ROADWAYS	25/30 MPH	200'± (2)
INDUSTRIAL AND LOCAL ACCESS ROADWAYS	25 MPH OR LESS	100'± (2)

(1) ALL SPACING MAY BE ADJUSTED TO ACCOMMODATE INTERSECTIONS AND DRIVEWAYS.

(2) THIS SPACING MAY BE REDUCED IN URBAN AREAS TO FIT ROADWAY CONDITIONS.

CHANNELIZATION DEVICE SPACING (FEET)		
MPH	TAPER	TANGENT
35/45	30	60
25/30	20	40

MINIMUM LANE CLOSURE TAPER LENGTH = L (FEET)					
LANE WIDTH (FEET)	POSTED SPEED (MPH)				
	25	30	35	40	45
10	105	150	205	270	450
11	115	165	225	295	495
12	125	180	245	320	540

PCMS	
1	2
EXIT XXX CLOSED	USE EXIT XXX
2.0 SEC	2.0 SEC

FIELD LOCATE IN ADVANCE OF TEMPORARY SIGNS.

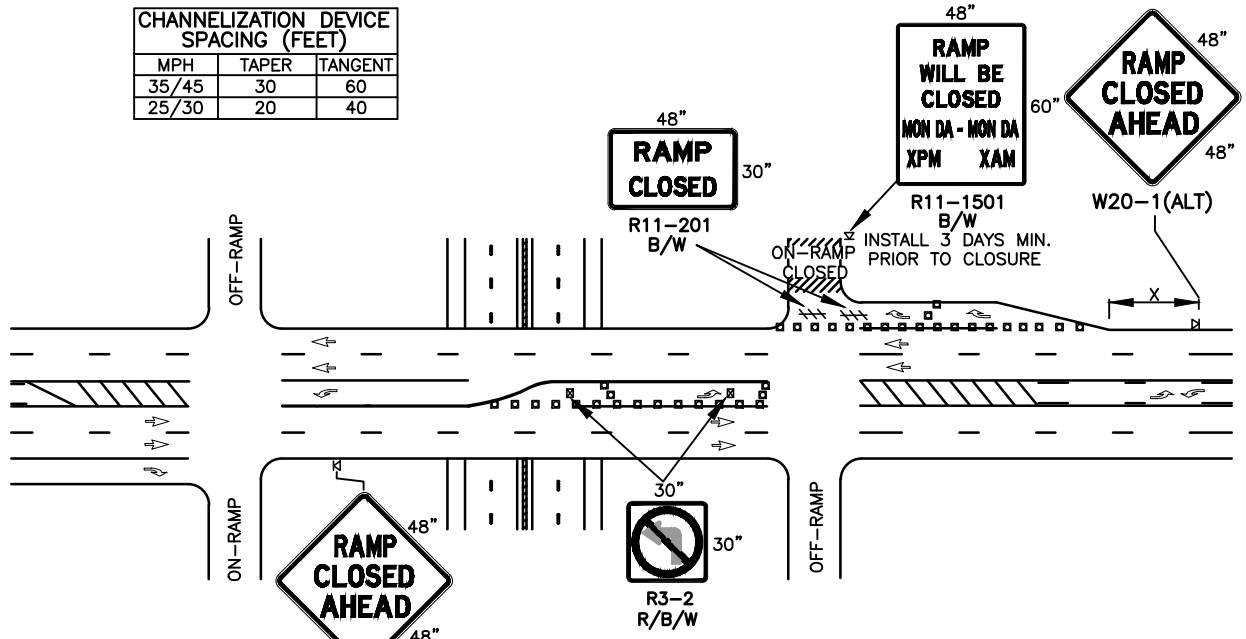

TYPICAL ON-RAMP CLOSURE

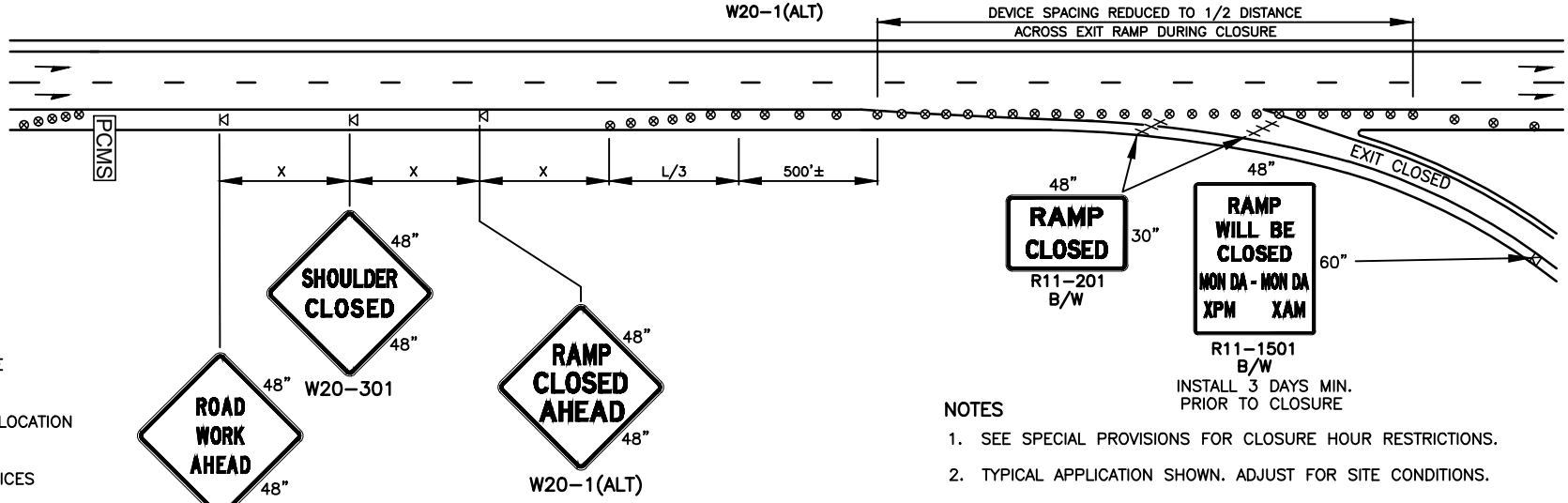

OFF-RAMP CLOSURE

LEGEND

- TYPE 3 BARRICADE
- TEMPORARY SIGN LOCATION
- CHANNELIZING DEVICES
- TRAFFIC SAFETY DRUM
- PCMS — PORTABLE CHANGEABLE MESSAGE SIGN
- TEMPORARY SIGN LOCATION (5' MOUNTING HEIGHT)

NOTES

1. SEE SPECIAL PROVISIONS FOR CLOSURE HOUR RESTRICTIONS.
2. TYPICAL APPLICATION SHOWN. ADJUST FOR SITE CONDITIONS.
3. ALL SIGNS ARE BLACK ON ORANGE UNLESS OTHERWISE DESIGNATED.

REV NO.	DATE	BY	APPR
1	3/16	RAW	CJC
2	9/21	RAW	CJC

PUBLIC WORKS – STREETS AND TRANSPORTATION

APPROVED BY: TRAFFIC ENGINEER MANAGER

APPROVED DATE: 9/1/2021

CITY OF Vancouver WASHINGTON

TRAFFIC CONTROL STANDARD PLAN
SHORT TERM
RAMP CLOSURES

STANDARD PLAN NUMBER

TC13

I:\CITYAPPS\AUTOCAD\STD_DETAILS\DRAWING_FILES\TC14_COV

MINIMUM LANE CLOSURE TAPER LENGTH = L (FEET)					
LANE WIDTH (FEET)	POSTED SPEED (MPH)				
	25	30	35	40	45
10	105	150	205	270	450
11	115	165	225	295	495
12	125	180	245	320	540

BUFFER DATA					
LONGITUDINAL BUFFER SPACE = B					
SPEED (MPH)	25	30	35	40	45
LENGTH (FEET)	155	200	250	305	360
BUFFER VEHICLE ROLL AHEAD DISTANCE = R					
TRANSPORTABLE ATTENUATOR MINIMUM HOST VEHICLE WEIGHT 15,000 LBS. THE MAXIMUM WEIGHT SHALL BE IN ACCORDANCE WITH THE MANUFACTURERS RECOMMENDATION.	30 FEET MIN. TO 100 FEET MAX.				
PROTECTIVE VEHICLE MAY BE A WORK VEHICLE STRATEGICALLY LOCATED TO SHIELD THE WORK AREA.	NO SPECIFIED DISTANCE REQUIRED				

SIGN SPACING = X (1)		
PRINCIPAL ARTERIALS	45 MPH	500'±
PRINCIPAL, MINOR OR COLLECTOR ARTERIALS	35/40 MPH	350'±
PRINCIPAL, MINOR, COLLECTOR ARTERIALS, INDUSTRIAL AND LOCAL ACCESS ROADWAYS	25/30 MPH	200'± (2)
INDUSTRIAL AND LOCAL ACCESS ROADWAYS	25 MPH OR LESS	100'± (2)

(1) ALL SPACING MAY BE ADJUSTED TO ACCOMMODATE INTERSECTIONS AND DRIVEWAYS.

(2) THIS SPACING MAY BE REDUCED IN URBAN AREAS TO FIT ROADWAY CONDITIONS.

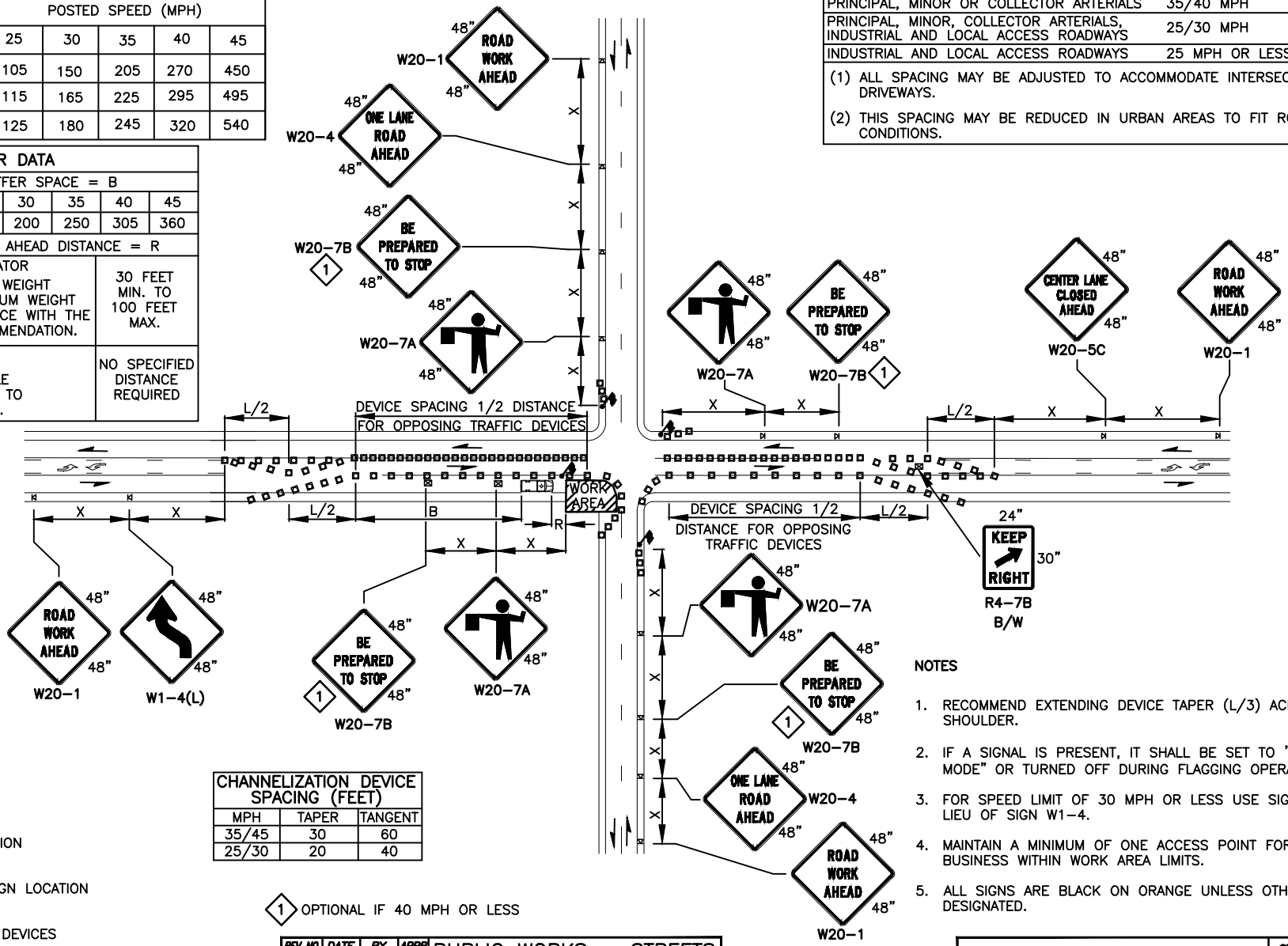

CHANNELIZATION DEVICE SPACING (FEET)		
MPH	TAPER	TANGENT
35/45	30	60
25/30	20	40

(1) OPTIONAL IF 40 MPH OR LESS

LEGEND

- FLAGGING STATION
- TEMPORARY SIGN LOCATION
- CHANNELIZING DEVICES
- PROTECTIVE VEHICLE – RECOMMENDED
- TEMPORARY SIGN LOCATION (5' MOUNTING HEIGHT)

NOTES

1. RECOMMEND EXTENDING DEVICE TAPER (L/3) ACROSS SHOULDER.
2. IF A SIGNAL IS PRESENT, IT SHALL BE SET TO "RED FLASH MODE" OR TURNED OFF DURING FLAGGING OPERATIONS.
3. FOR SPEED LIMIT OF 30 MPH OR LESS USE SIGN W1-3 IN LIEU OF SIGN W1-4.
4. MAINTAIN A MINIMUM OF ONE ACCESS POINT FOR EACH BUSINESS WITHIN WORK AREA LIMITS.
5. ALL SIGNS ARE BLACK ON ORANGE UNLESS OTHERWISE DESIGNATED.

REV NO.	DATE	BY	APPR
1	3/16	RAW	CJC
2	3/17	RAW	CJC
3	9/21	RAW	CJC

PUBLIC WORKS – STREETS AND TRANSPORTATION

APPROVED BY: TRAFFIC ENGINEER MANAGER

APPROVED DATE: 9/1/2021

CITY OF Vancouver WASHINGTON

TRAFFIC CONTROL STANDARD PLAN
INTERSECTION LANE CLOSURE
3 LANE ROADWAYS

STANDARD PLAN NUMBER

TC14

I:\CITYAPPS\AUTOCAD\STD_DETAILS\DRAWING_FILES\TC15_COV

SIGN SPACING = X (1)		
PRINCIPAL ARTERIALS	45 MPH	500'±
PRINCIPAL, MINOR OR COLLECTOR ARTERIALS	35/40 MPH	350'±
PRINCIPAL, MINOR, COLLECTOR ARTERIALS, INDUSTRIAL AND LOCAL ACCESS ROADWAYS	25/30 MPH	200'± (2)
INDUSTRIAL AND LOCAL ACCESS ROADWAYS	25 MPH OR LESS	100'± (2)

(1) ALL SPACING MAY BE ADJUSTED TO ACCOMMODATE INTERSECTIONS AND DRIVEWAYS.

(2) THIS SPACING MAY BE REDUCED IN URBAN AREAS TO FIT ROADWAY CONDITIONS.

BUFFER DATA					
LONGITUDINAL BUFFER SPACE = B					
SPEED (MPH)	25	30	35	40	45
LENGTH (FEET)	155	200	250	305	360
BUFFER VEHICLE ROLL AHEAD DISTANCE = R					
TRANSPORTABLE ATTENUATOR MINIMUM HOST VEHICLE WEIGHT 15,000 LBS. THE MAXIMUM WEIGHT SHALL BE IN ACCORDANCE WITH THE MANUFACTURERS RECOMMENDATION.	30 FEET MIN. TO 100 FEET MAX.				
PROTECTIVE VEHICLE MAY BE A WORK VEHICLE STRATEGICALLY LOCATED TO SHIELD THE WORK AREA.	NO SPECIFIED DISTANCE REQUIRED				

MINIMUM LANE CLOSURE TAPER LENGTH = L (FEET)					
LANE WIDTH (FEET)	POSTED SPEED (MPH)				
	25	30	35	40	45
10	105	150	205	270	450
11	115	165	225	295	495
12	125	180	245	320	540

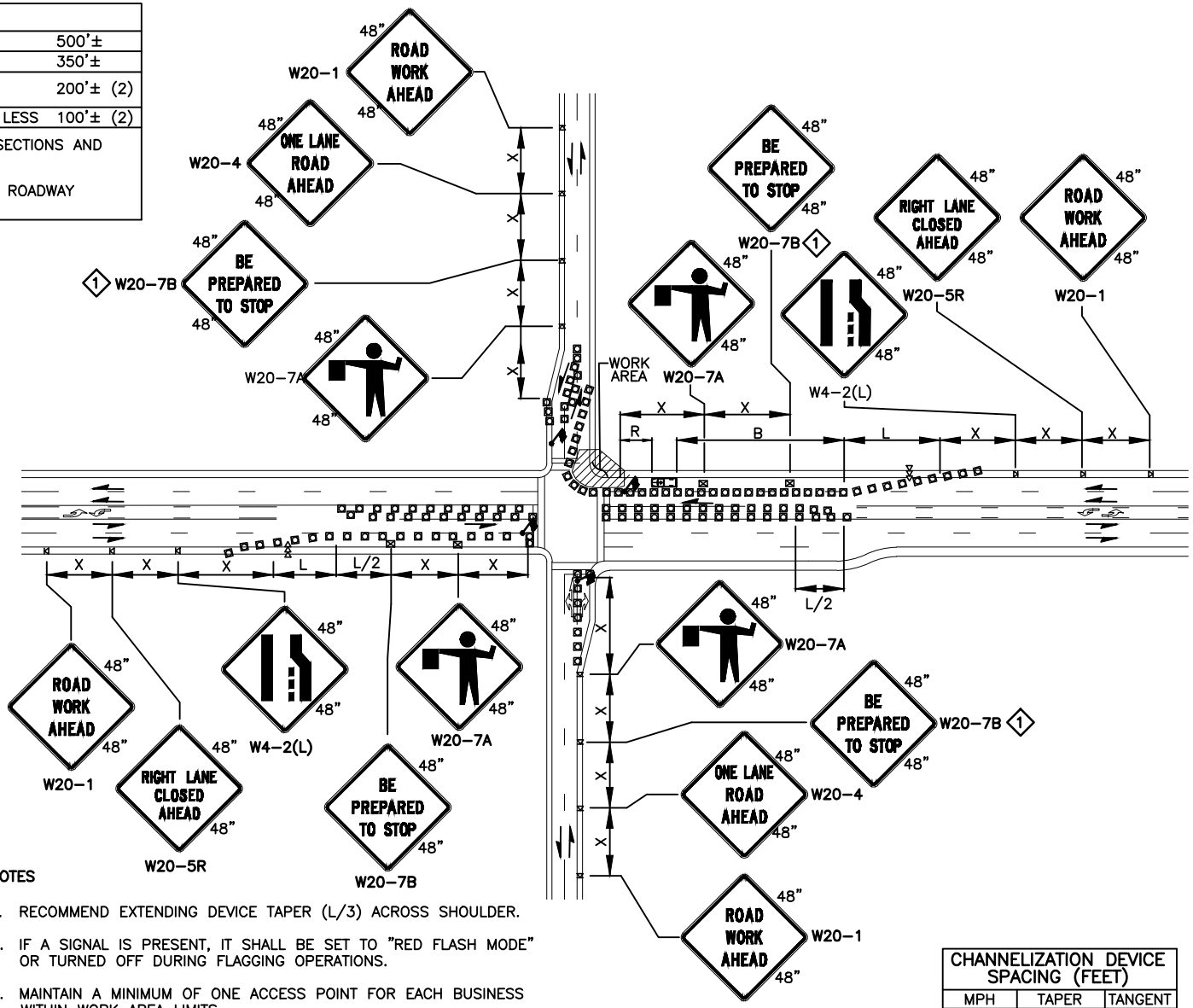

LEGEND

- FLAGGING STATION
- TEMPORARY SIGN LOCATION
- CHANNELIZING DEVICES
- SEQUENTIAL ARROW SIGN
- PROTECTIVE VEHICLE – RECOMMENDED
- TEMPORARY SIGN LOCATION (5' MOUNTING HEIGHT)

NOTES

1. RECOMMEND EXTENDING DEVICE TAPER (L/3) ACROSS SHOULDER.
2. IF A SIGNAL IS PRESENT, IT SHALL BE SET TO "RED FLASH MODE" OR TURNED OFF DURING FLAGGING OPERATIONS.
3. MAINTAIN A MINIMUM OF ONE ACCESS POINT FOR EACH BUSINESS WITHIN WORK AREA LIMITS.
4. ALL SIGNS ARE BLACK ON ORANGE.

(1) OPTIONAL IF 40 MPH OR LESS

CHANNELIZATION DEVICE SPACING (FEET)		
MPH	TAPER	TANGENT
35/45	30	60
25/30	20	40

REV NO.	DATE	BY	APPR
1	3/16	RAW	CJC
2	3/17	RAW	CJC
3	9/21	RAW	CJC

PUBLIC WORKS – STREETS AND TRANSPORTATION

APPROVED BY: TRAFFIC ENGINEER MANAGER

APPROVED DATE: 9/1/2021

CITY OF Vancouver WASHINGTON

TRAFFIC CONTROL STANDARD PLAN
INTERSECTION LANE CLOSURE
5 LANE ROADWAYS

STANDARD PLAN NUMBER

TC15

I:\CITYAPPS\AUTOCAD\STD_DETAILS\DRAWING_FILES\TC16A_COV

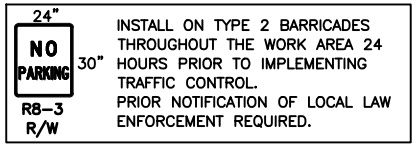

INSTALL ON TYPE 2 BARRICADES THROUGHOUT THE WORK AREA 24 HOURS PRIOR TO IMPLEMENTING TRAFFIC CONTROL.
PRIOR NOTIFICATION OF LOCAL LAW ENFORCEMENT REQUIRED.

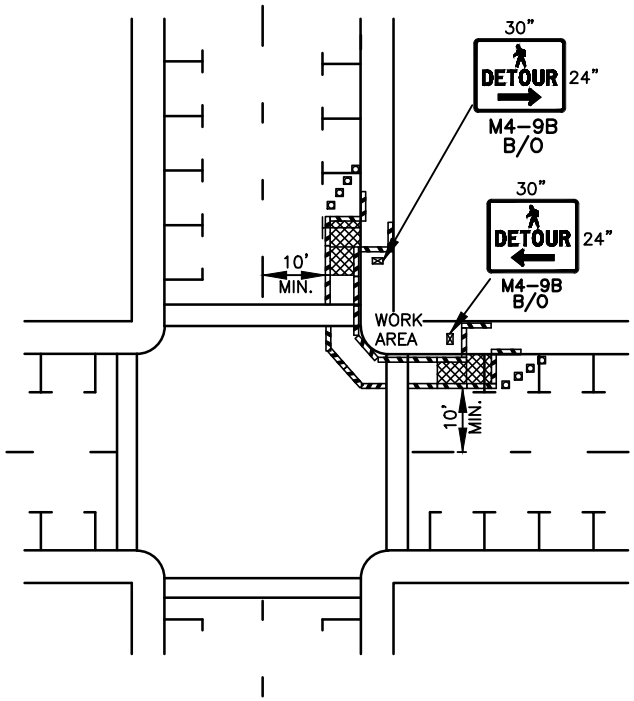

SIDEWALK DIVERSION

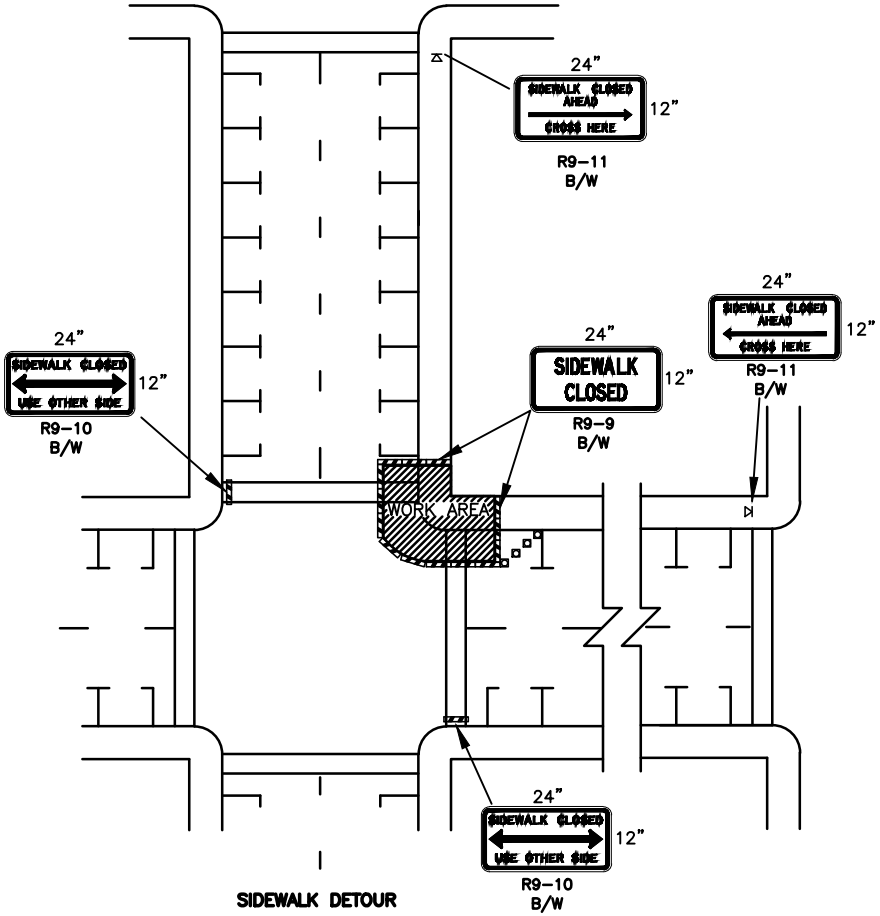

SIDEWALK DETOUR

NOTES

1. CONTROLS SHOWN ARE FOR PEDESTRIAN TRAFFIC ONLY.
2. A 60" PATH WIDTH SHOULD BE MAINTAINED (48" IS THE MINIMUM).
3. CONTACT AND COORDINATE IMPACTED TRANSIT AGENCIES PRIOR TO IMPLEMENTING ANY CLOSURES.
4. SEE SHEET TC-52 OR TC-53 FOR TEMPORARY PEDESTRIAN RAMP DETAILS.
5. ADA PEDESTRIAN FACILITIES MUST BE MAINTAINED. SEE STANDARD SPECIFICATION 1-10.2(1)B.
6. TEMPORARY PEDESTRIAN PUSH BUTTONS SHALL BE PLACED ON THE DIVERTED PATH WHEN EXISTING BUTTONS ARE NOT ACCESSIBLE TO PEDESTRIANS.

LEGEND

- TEMPORARY SIGN LOCATION
- CHANNELIZING DEVICES
- PEDESTRIAN CHANNELIZING DEVICES
- TEMPORARY PEDESTRIAN RAMP FOR SIDEWALKS

REV NO.	DATE	BY	APPR
1	9/21	RAW	CJC

PUBLIC WORKS – STREETS AND TRANSPORTATION

APPROVED BY: TRAFFIC ENGINEER MANAGER

APPROVED DATE: 9/1/2021

CITY OF Vancouver WASHINGTON

TRAFFIC CONTROL STANDARD PLAN
INTERSECTION PEDESTRIAN TRAFFIC CONTROL

STANDARD PLAN NUMBER

TC16A

I:\CITYAPPS\AUTOCAD\STD_DETAILS\DRAWING_FILES\TC16B_COV

24" NO PARKING 30" R8-3 R/W

INSTALL ON TYPE 2 BARRICADES THROUGHOUT THE WORK AREA 24 HOURS PRIOR TO IMPLEMENTING TRAFFIC CONTROL.
PRIOR NOTIFICATION OF LOCAL LAW ENFORCEMENT REQUIRED.

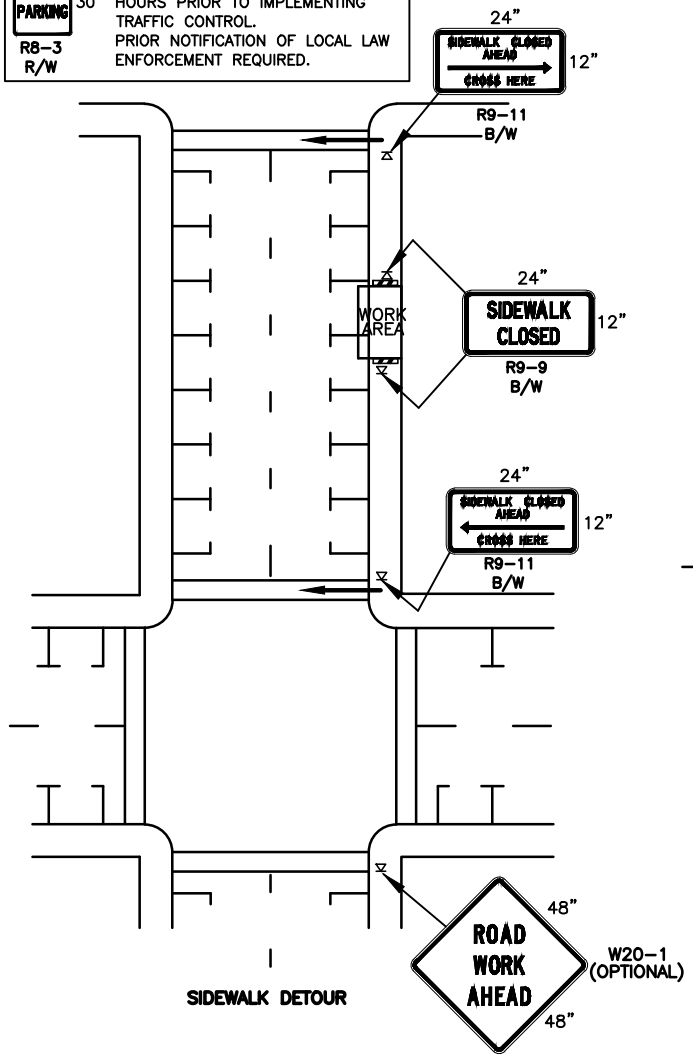

SIDEWALK DETOUR

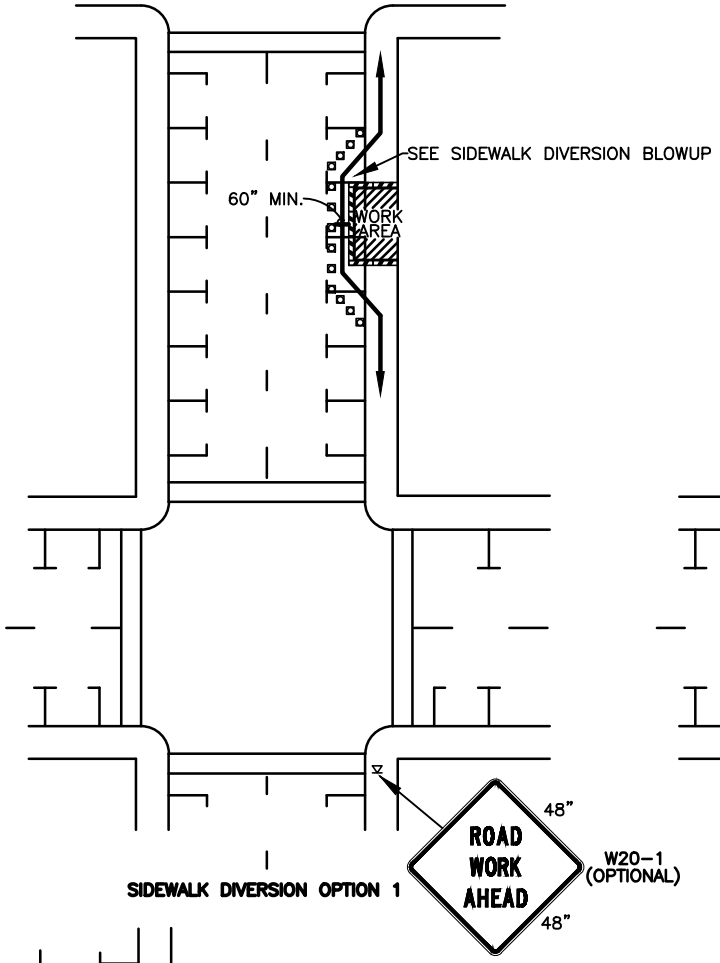

SIDEWALK DIVERSION OPTION 1

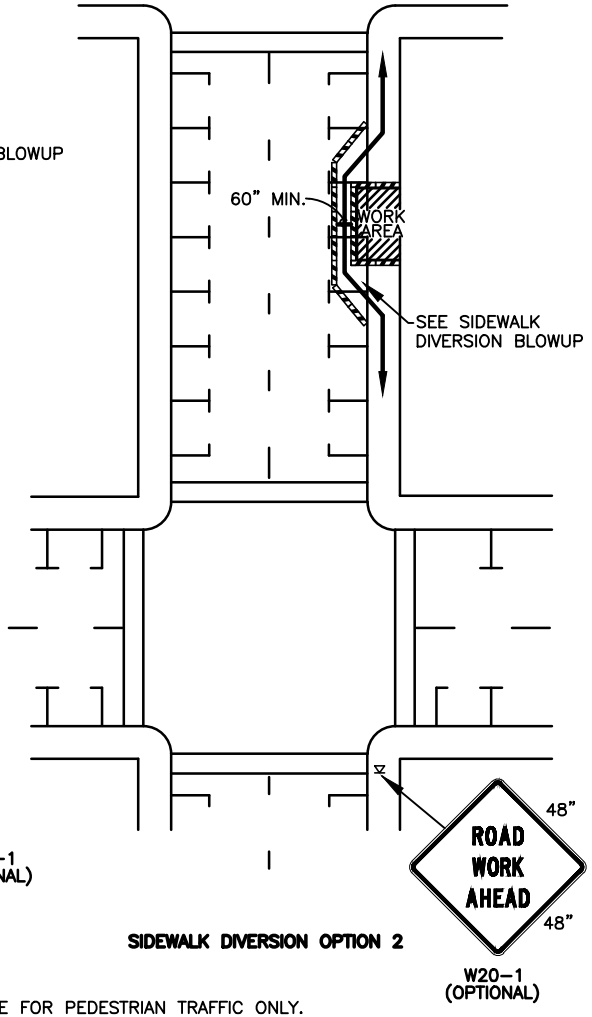

SIDEWALK DIVERSION OPTION 2

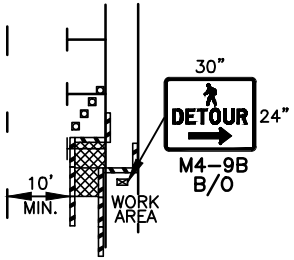

SIDEWALK DIVERSION BLOWUP
(TYP. EACH END OF WORK AREA)

NOTES

1. CONTROLS SHOWN ARE FOR PEDESTRIAN TRAFFIC ONLY.
2. A 60" PATH WIDTH SHOULD BE MAINTAINED (48" IS THE MINIMUM).
3. CONTACT AND COORDINATE IMPACTED TRANSIT AGENCIES PRIOR TO IMPLEMENTING ANY CLOSURES.
4. SEE SHEET TC-52 OR TC-53 FOR TEMPORARY PEDESTRIAN RAMP DETAILS.
5. ADA PEDESTRIAN FACILITIES MUST BE MAINTAINED. SEE STANDARD SPECIFICATION 1-10.2(1)B.
6. SIDEWALK CLOSED CROSS HERE SIGNS SHALL INCLUDE AUDIBLE INFORMATION DEVICES TO PROVIDE ADEQUATE COMMUNICATION TO PEDESTRIANS WITH VISUAL DISABILITITES.

LEGEND

- TEMPORARY SIGN LOCATION
- CHANNELIZING DEVICES
- PEDESTRIAN CHANNELIZING DEVICES
- TEMPORARY PEDESTRIAN RAMP FOR SIDEWALKS

REV NO.	DATE	BY	APPR
1	9/21	RAW	CJC

PUBLIC WORKS – STREETS AND TRANSPORTATION

APPROVED BY: TRAFFIC ENGINEER MANAGER

APPROVED DATE: 9/1/2021

CITY OF Vancouver WASHINGTON

TRAFFIC CONTROL STANDARD PLAN
MID-BLOCK PEDESTRIAN TRAFFIC CONTROL

STANDARD PLAN NUMBER
TC16B

I:\CITYAPPS\AUTOCAD\STD_DETAILS\DRAWING_FILES\TC17_COV

BUFFER DATA					
LONGITUDINAL BUFFER SPACE = B					
SPEED (MPH)	25	30	35	40	45
LENGTH (FEET)	155	200	250	305	360
BUFFER VEHICLE ROLL AHEAD DISTANCE = R					
TRANSPORTABLE ATTENUATOR MINIMUM HOST VEHICLE WEIGHT 15,000 LBS. THE MAXIMUM WEIGHT SHALL BE IN ACCORDANCE WITH THE MANUFACTURERS RECOMMENDATION.					30 FEET MIN. TO 100 FEET MAX.

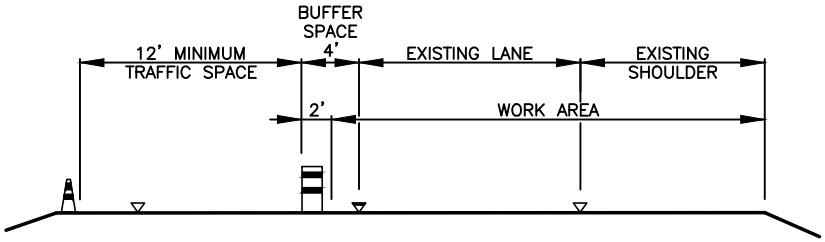

TYPICAL SECTION A–A

MINIMUM LANE CLOSURE TAPER LENGTH = L (FEET)					
LANE WIDTH (FEET)	POSTED SPEED (MPH)				
	25	30	35	40	45
10	105	150	205	270	450
11	115	165	225	295	495
12	125	180	245	320	540

MINIMUM SHOULDER TAPER LENGTH = L/3 (FEET)					
SHOULDER WIDTH (FEET)	POSTED SPEED (MPH)				
	25	30	35	40	45
8	40	40	60	90	120
10	40	60	90	90	150
USE A MINIMUM 3 DEVICES TAPER FOR SHOULDER LESS THEN 8'.					

SIGN SPACING = X (1)		
PRINCIPAL ARTERIALS	45 MPH	500'±
PRINCIPAL, MINOR OR COLLECTOR ARTERIALS	35/40 MPH	350'±
PRINCIPAL, MINOR, COLLECTOR ARTERIALS, INDUSTRIAL AND LOCAL ACCESS ROADWAYS	25/30 MPH	200'± (2)
INDUSTRIAL AND LOCAL ACCESS ROADWAYS	25 MPH OR LESS	100'± (2)

(1) ALL SPACING MAY BE ADJUSTED TO ACCOMMODATE INTERSECTIONS AND DRIVEWAYS.

(2) THIS SPACING MAY BE REDUCED IN URBAN AREAS TO FIT ROADWAY CONDITIONS.

W5–1

CHANNELIZATION DEVICE SPACING (FEET)		
MPH	TAPER	TANGENT
35/45	30	60
25/30	20	40

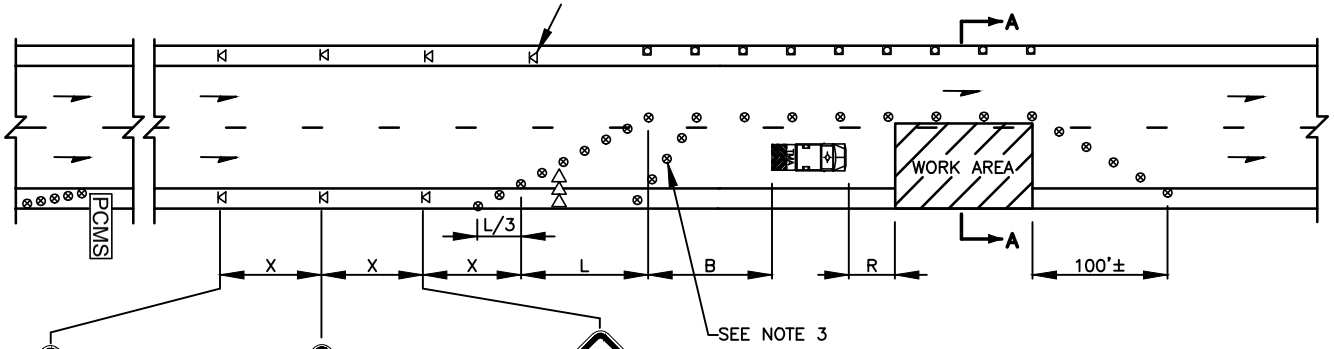

W20–1

W20–5R

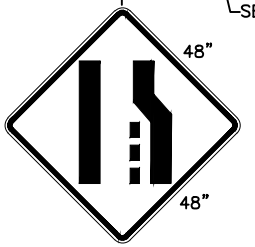

W4–2(L)

LEGEND

- TEMPORARY SIGN LOCATION
- CHANNELIZING DEVICES
- TRAFFIC SAFETY DRUM
- SEQUENTIAL ARROW SIGN
- TRANSPORTABLE ATTENUATOR
- PCMS — PORTABLE CHANGEABLE MESSAGE SIGN

NOTES

1. SEE SPECIAL PROVISIONS FOR WORK HOUR RESTRICTIONS.
2. RECOMMEND EXTENDING DEVICE TAPER (L/3) ACROSS SHOULDER.
3. USE TRANSVERSE DEVICES IN CLOSED LANE EVERY 1000' (RECOMMENDED).
4. ALL SIGNS ARE BLACK ON ORANGE.
5. RECOMMEND ADVANCE NOTICE FOR ANY OVER WIDTH LOADS PRIOR TO LANE CLOSURE FOR ALTERNATE ROUTES IF APPLICABLE.

REV NO.	DATE	BY	APPR
1	3/16	RAW	CJC
2	9/21	RAW	CJC

PUBLIC WORKS – STREETS AND TRANSPORTATION

APPROVED BY: TRAFFIC ENGINEER MANAGER

APPROVED DATE: 9/1/2021

CITY OF Vancouver WASHINGTON

TRAFFIC CONTROL STANDARD PLAN
SINGLE–LANE CLOSURE WITH SHIFT

STANDARD PLAN NUMBER

TC17

I:\CITYAPPS\AUTOCAD\STD_DETAILS\DRAWING_FILES\TC16_COV

CHANNELIZATION DEVICE SPACING (FEET)		
MPH	TAPER	TANGENT
35/45	30	60
25/30	20	40

SIGN SPACING = X (1)		
PRINCIPAL ARTERIALS	45 MPH	500'±
PRINCIPAL, MINOR OR COLLECTOR ARTERIALS	35/40 MPH	350'±
PRINCIPAL, MINOR, COLLECTOR ARTERIALS, INDUSTRIAL AND LOCAL ACCESS ROADWAYS	25/30 MPH	200'± (2)
INDUSTRIAL AND LOCAL ACCESS ROADWAYS	25 MPH OR LESS	100'± (2)

(1) ALL SPACING MAY BE ADJUSTED TO ACCOMMODATE INTERSECTIONS AND DRIVEWAYS.

(2) THIS SPACING MAY BE REDUCED IN URBAN AREAS TO FIT ROADWAY CONDITIONS.

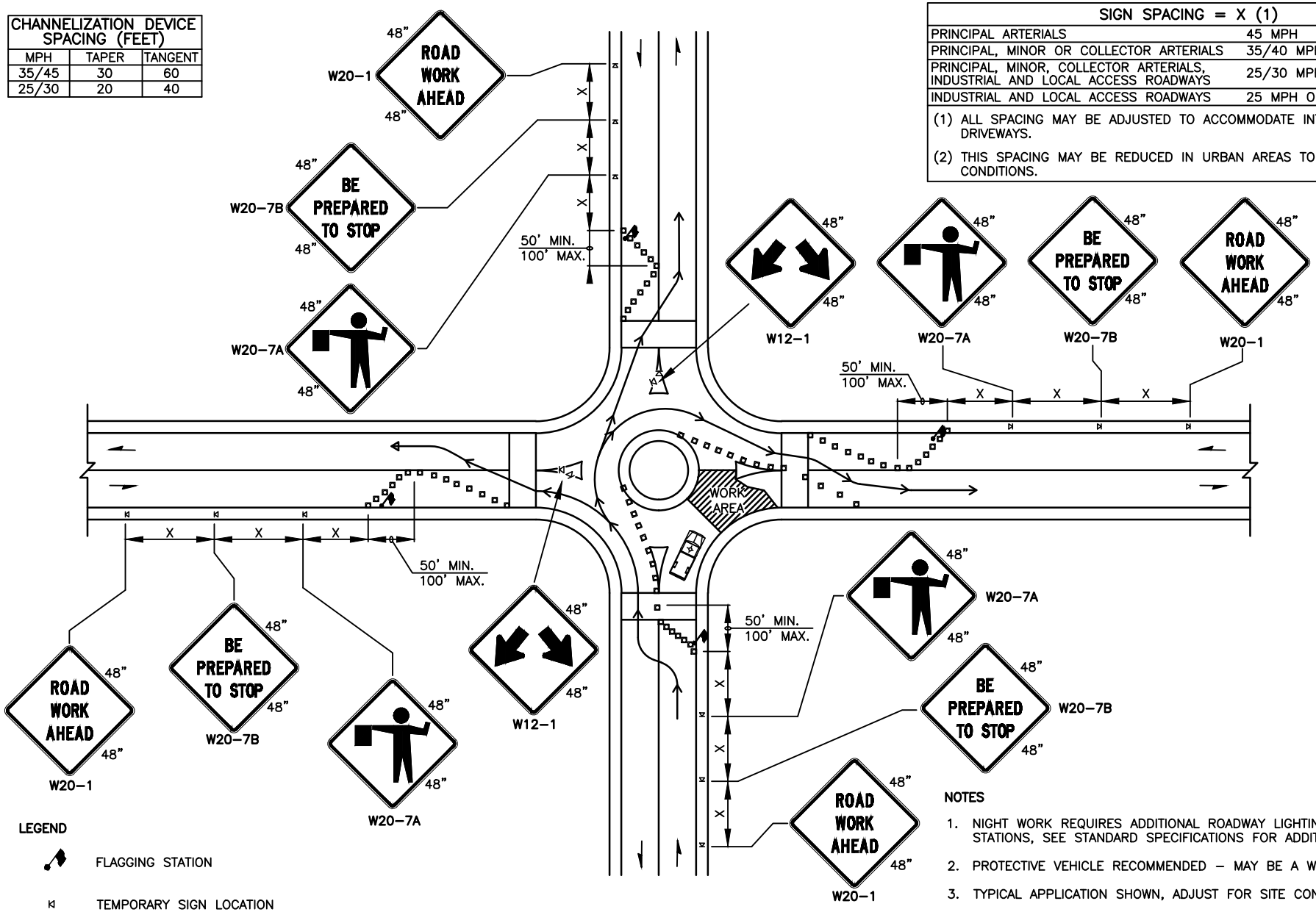

NOTES

1. NIGHT WORK REQUIRES ADDITIONAL ROADWAY LIGHTING AT FLAGGING STATIONS, SEE STANDARD SPECIFICATIONS FOR ADDITIONAL DETAILS.
2. PROTECTIVE VEHICLE RECOMMENDED – MAY BE A WORK VEHICLE.
3. TYPICAL APPLICATION SHOWN, ADJUST FOR SITE CONDITIONS.

LEGEND

- FLAGGING STATION
- TEMPORARY SIGN LOCATION
- CHANNELIZING DEVICES
- PROTECTIVE VEHICLE – RECOMMENDED

REV NO.	DATE	BY	APPR
1	3/16	RAW	CJC
2	9/21	RAW	CJC

PUBLIC WORKS – STREETS AND TRANSPORTATION

APPROVED BY: TRAFFIC ENGINEER MANAGER

APPROVED DATE: 9/1/2021

CITY OF Vancouver WASHINGTON

TRAFFIC CONTROL STANDARD PLAN
TYPICAL ROUNDABOUT FLAGGING OPERATION

STANDARD PLAN NUMBER

TC18

I:\CITYAPPS\AUTOCAD\STD_DETAILS\DRAWING_FILES\TC19_COV

MINIMUM LANE CLOSURE TAPER LENGTH = L (FEET)					
LANE WIDTH (FEET)	POSTED SPEED (MPH)				
	25	30	35	40	45
10	105	150	205	270	450
11	115	165	225	295	495
12	125	180	245	320	540

SIGN SPACING = X (1)		
PRINCIPAL ARTERIALS	45 MPH	500'±
PRINCIPAL, MINOR OR COLLECTOR ARTERIALS	35/40 MPH	350'±
PRINCIPAL, MINOR, COLLECTOR ARTERIALS, INDUSTRIAL AND LOCAL ACCESS ROADWAYS	25/30 MPH	200'± (2)
INDUSTRIAL AND LOCAL ACCESS ROADWAYS	25 MPH OR LESS	100'± (2)

(1) ALL SPACING MAY BE ADJUSTED TO ACCOMMODATE INTERSECTIONS AND DRIVEWAYS.

(2) THIS SPACING MAY BE REDUCED IN URBAN AREAS TO FIT ROADWAY CONDITIONS.

NOTES

1. RECOMMEND EXTENDING DEVICE TAPER (L/3) ACROSS SHOULDER.
2. IF A SIGNAL IS PRESENT, IT SHALL BE SET TO "RED FLASH MODE" OR TURNED OFF DURING FLAGGING OPERATIONS.
3. FOR SPEED LIMIT OF 30 MPH OR LESS USE SIGN W1-3 IN LIEU OF SIGN W1-4.
4. MAINTAIN A MINIMUM OF ONE ACCESS POINT FOR EACH BUSINESS WITHIN WORK AREA LIMITS.
5. ALL SIGNS ARE BLACK ON ORANGE UNLESS OTHERWISE DESIGNATED.

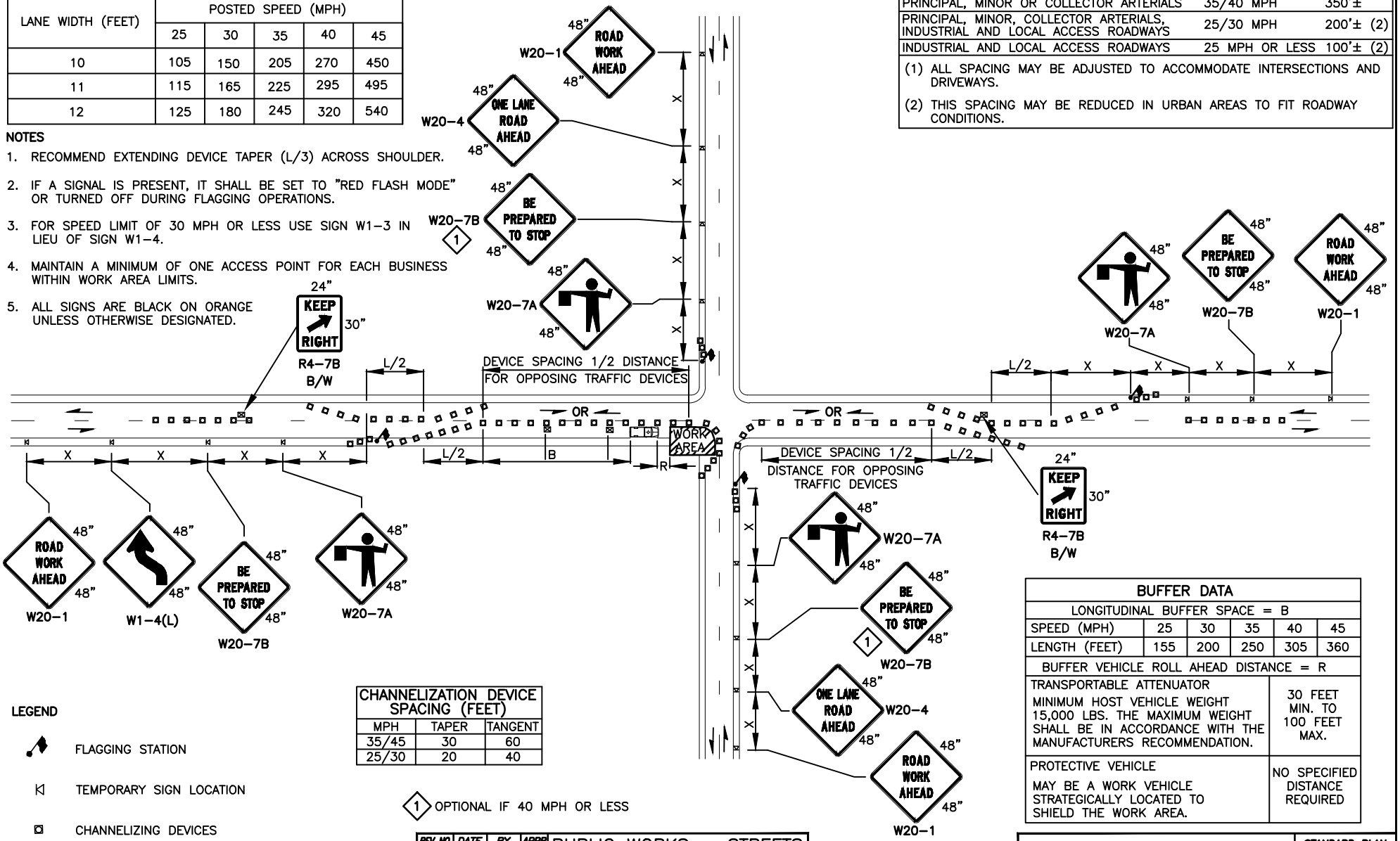

BUFFER DATA					
LONGITUDINAL BUFFER SPACE = B					
SPEED (MPH)	25	30	35	40	45
LENGTH (FEET)	155	200	250	305	360
BUFFER VEHICLE ROLL AHEAD DISTANCE = R					
TRANSPORTABLE ATTENUATOR MINIMUM HOST VEHICLE WEIGHT 15,000 LBS. THE MAXIMUM WEIGHT SHALL BE IN ACCORDANCE WITH THE MANUFACTURERS RECOMMENDATION.					30 FEET MIN. TO 100 FEET MAX.
PROTECTIVE VEHICLE MAY BE A WORK VEHICLE STRATEGICALLY LOCATED TO SHIELD THE WORK AREA.					NO SPECIFIED DISTANCE REQUIRED

CHANNELIZATION DEVICE SPACING (FEET)		
MPH	TAPER	TANGENT
35/45	30	60
25/30	20	40

LEGEND

- FLAGGING STATION
- TEMPORARY SIGN LOCATION
- CHANNELIZING DEVICES
- PROTECTIVE VEHICLE – RECOMMENDED
- TEMPORARY SIGN LOCATION (5' MOUNTING HEIGHT)

(1) OPTIONAL IF 40 MPH OR LESS

REV NO.	DATE	BY	APPR
1	3/16	RAW	CJC
2	9/21	RAW	CJC

PUBLIC WORKS – STREETS AND TRANSPORTATION

APPROVED BY: TRAFFIC ENGINEER MANAGER

APPROVED DATE: 9/1/2021

CITY OF Vancouver WASHINGTON

TRAFFIC CONTROL STANDARD PLAN
INTERSECTION LANE CLOSURE
2 LANE ROADWAYS

STANDARD PLAN NUMBER

TC19

I:\CITYAPPS\AUTOCAD\STD_DETAILS\DRAWING_FILES\TC52_COV

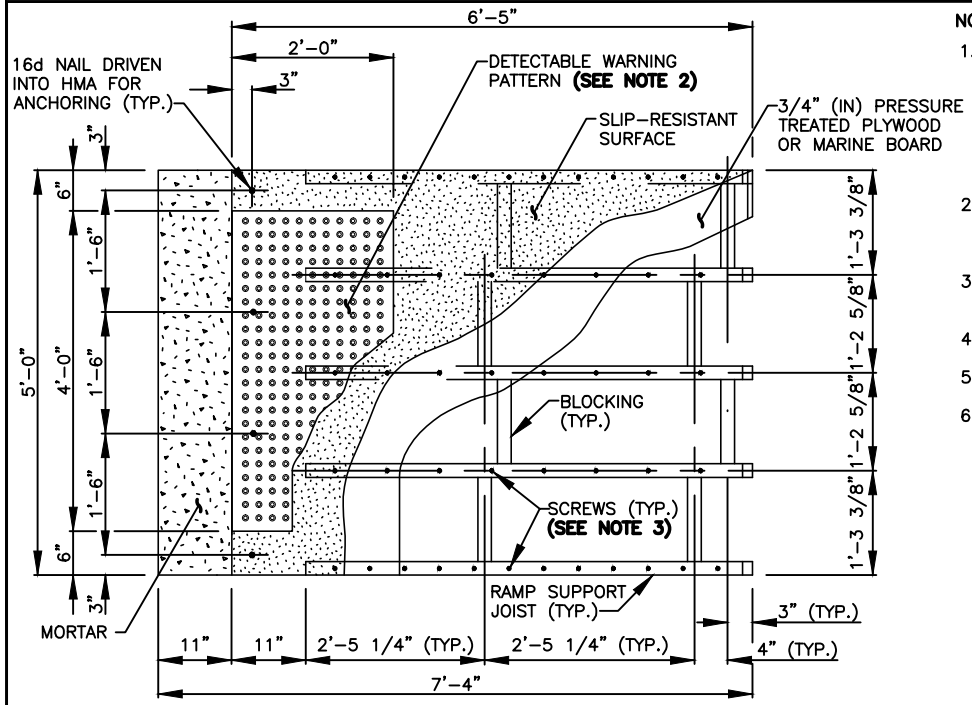

TOP VIEW
RAMP DETAIL

NOTES

1. THIS DESIGN ASSUMES OPTIMAL CONDITIONS AND A STANDARD CURB HEIGHT OF 6" (IN). INSTALLED RAMPS SHALL BE NO STEEPER THAN 12H : 1V, AND SHALL HAVE A CROSS-SLOPE OF 2% OR LESS. USE SHIMS OR GROUT AS REQUIRED TO ADJUST FOR EXISTING CONDITIONS AND TO PREVENT ROCKING. SHIMS SHALL BE NO HIGHER THAN 1" (IN), AND SHALL BE SECURED TO THE RAMP. FOR CURBS SHORTER THAN 6" (IN), INSTALL A RAMP ON THE SIDEWALK, NO STEEPER THAN 12H : 1V, MADE OF GROUT OR AS APPROVED BY THE ENGINEER. ADJUSTMENTS TO THE RAMP DIMENSIONS SHOWN MAY BE REQUIRED TO MATCH EXISTING CONDITIONS.
2. THE DETECTABLE WARNING PATTERN SHALL BE INSTALLED ONLY WHEN THE INTENT IS TO GUIDE PEDESTRIANS DIRECTLY ACROSS THE ROADWAY (CROSSWALK). SEE STANDARD PLAN F-40.10 FOR DETAILS.
3. SCREWS SHALL BE USED TO SECURE THE RAMP SURFACE. SPACING SHALL BE IN ACCORDANCE WITH THE CURRENT BUILDING CODE.
4. USE A SLIP-RESISTANT TREATMENT FOR THE SURFACE OF RAMP.
5. ALL FASTENERS SHALL BE GALVANIZED.
6. DO NOT INSTALL A HAND RAILING IF USING THE EDGE BOARD OPTION.

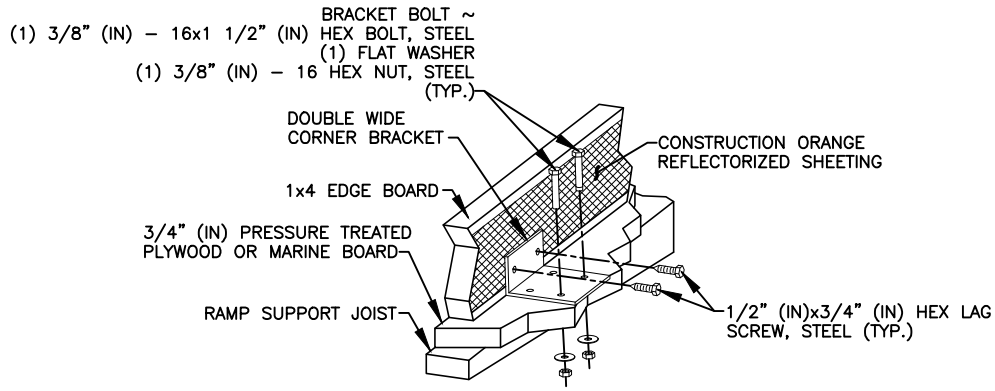

PERSPECTIVE VIEW

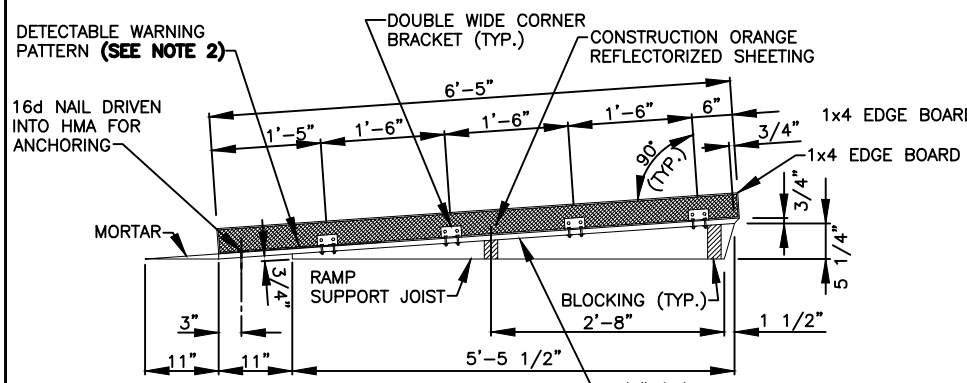

SIDE VIEW
RAMP AND EDGE BOARD

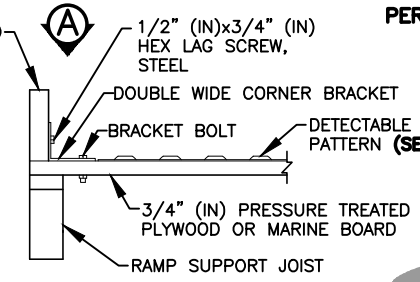

END VIEW
EDGE BOARD ATTACHMENT DETAIL

DETAIL A

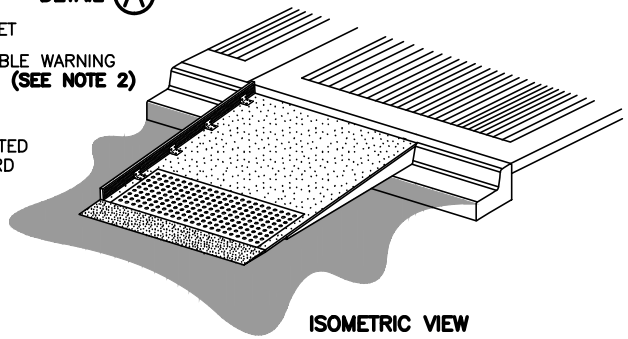

ISOMETRIC VIEW

REV NO.	DATE	BY	APPR
1	3/16	RAW	CJC
2	9/21	RAW	CJC

PUBLIC WORKS - STREETS AND TRANSPORTATION

APPROVED BY: TRAFFIC ENGINEER MANAGER

APPROVED DATE: 9/1/2021

CITY OF Vancouver WASHINGTON

TRAFFIC CONTROL STANDARD PLAN
TEMPORARY PEDESTRIAN RAMP WITH EDGE BOARD

STANDARD PLAN NUMBER
TC52

I:\CITYAPPS\AUTOCAD\STD_DETAILS\DRAWING_FILES\TC53_COV

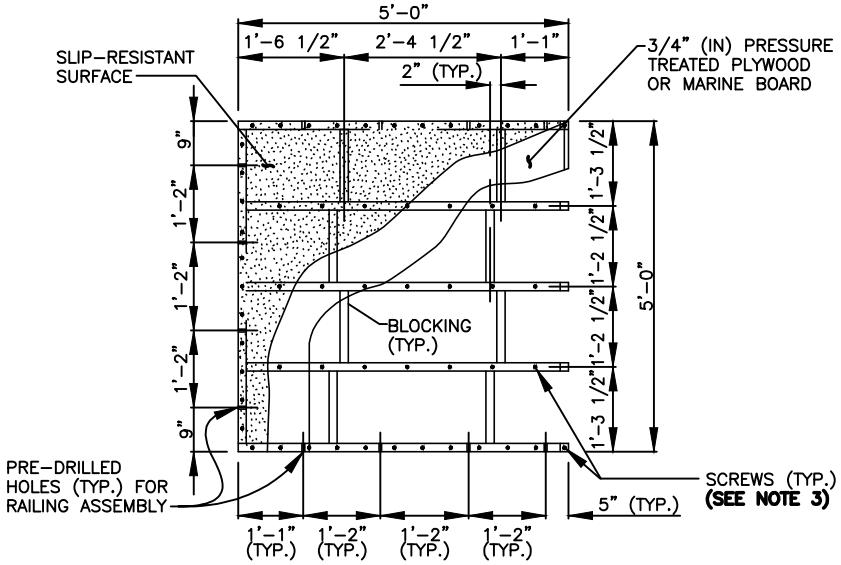

TOP VIEW
PLATFORM DETAIL

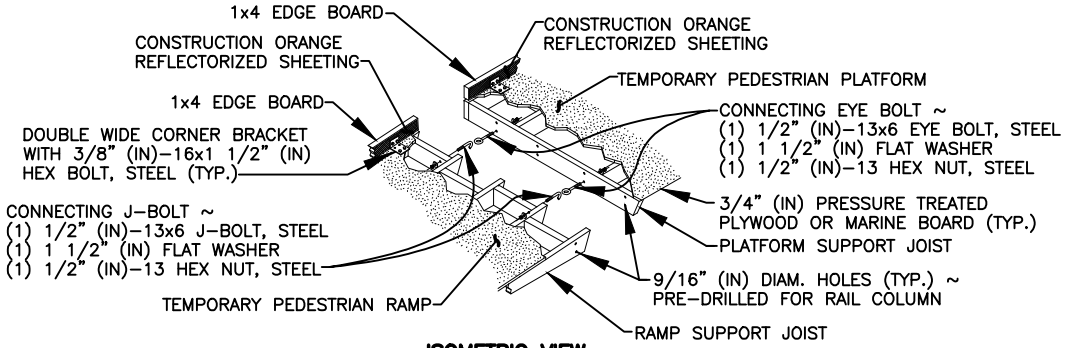

ISOMETRIC VIEW
DETAIL (A)

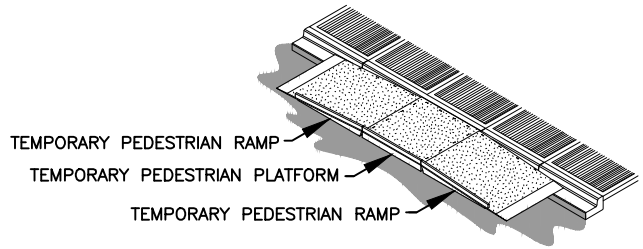

ISOMETRIC VIEW
DUAL RAMP

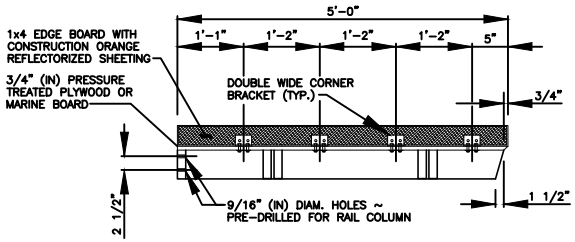

ELEVATION

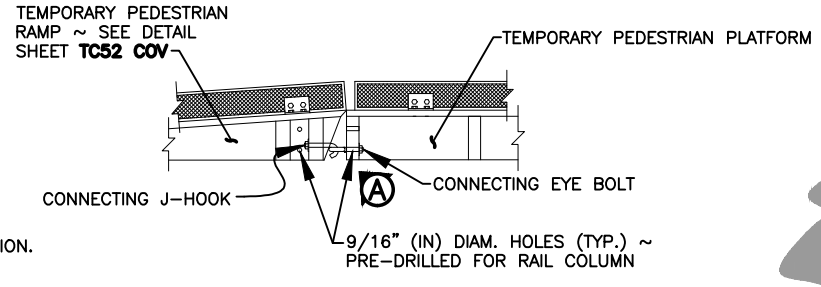

SIDE VIEW
CONNECTION DETAIL

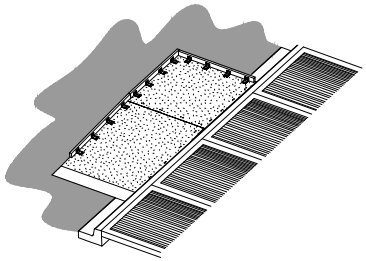

ISOMETRIC VIEW
SINGLE RAMP

NOTES

1. ALL HOLES SHOWN SHALL BE DRILLED TO FACILITATE RE-USE AND FLEXIBLE EXPANSION.
2. SEE DETAIL SHEET **TC52 COV**, FOR TEMPORARY PEDESTRIAN RAMP DETAILS.
3. THIS DESIGN ASSUMES OPTIMAL CONDITIONS AND A STANDARD CURB HEIGHT OF 6" (IN). INSTALLED RAMPS SHALL BE NO STEEPER THAN 12H : 1V, AND SHALL HAVE A CROSS-SLOPE OF 2% OR LESS. USE SHIMS OR GROUT AS REQUIRED TO ADJUST FOR EXISTING CONDITIONS AND TO PREVENT ROCKING. SHIMS SHALL BE NO HIGHER THAN 1" (IN), AND SHALL BE SECURED TO THE RAMP AND/OR PLATFORM. FOR CURBS SHORTER THAN 6" (IN), INSTALL A RAMP ON THE SIDEWALK, NO STEEPER THAN 12H : 1V, MADE OF GROUT OR AS APPROVED BY THE ENGINEER. ADJUSTMENTS TO THE PLATFORM DIMENSIONS SHOWN MAY BE REQUIRED TO MATCH EXISTING CONDITIONS.
4. SCREWS SHALL BE USED TO SECURE THE RAMP SURFACE. SPACING SHALL BE IN ACCORDANCE WITH THE CURRENT BUILDING CODE.
5. USE A SLIP-RESISTANT TREATMENT FOR SURFACE OF RAMP.
6. ALL FASTENERS SHALL BE GALVANIZED.

REV NO.	DATE	BY	APPR
1	3/16	RAW	CJC
2	9/21	RAW	CJC

PUBLIC WORKS – STREETS AND TRANSPORTATION

APPROVED BY: TRAFFIC ENGINEER MANAGER

APPROVED DATE: 9/1/2021

CITY OF Vancouver WASHINGTON

TRAFFIC CONTROL STANDARD PLAN
TEMPORARY PEDESTRIAN PLATFORM WITH EDGE BOARD

STANDARD PLAN NUMBER
TC53

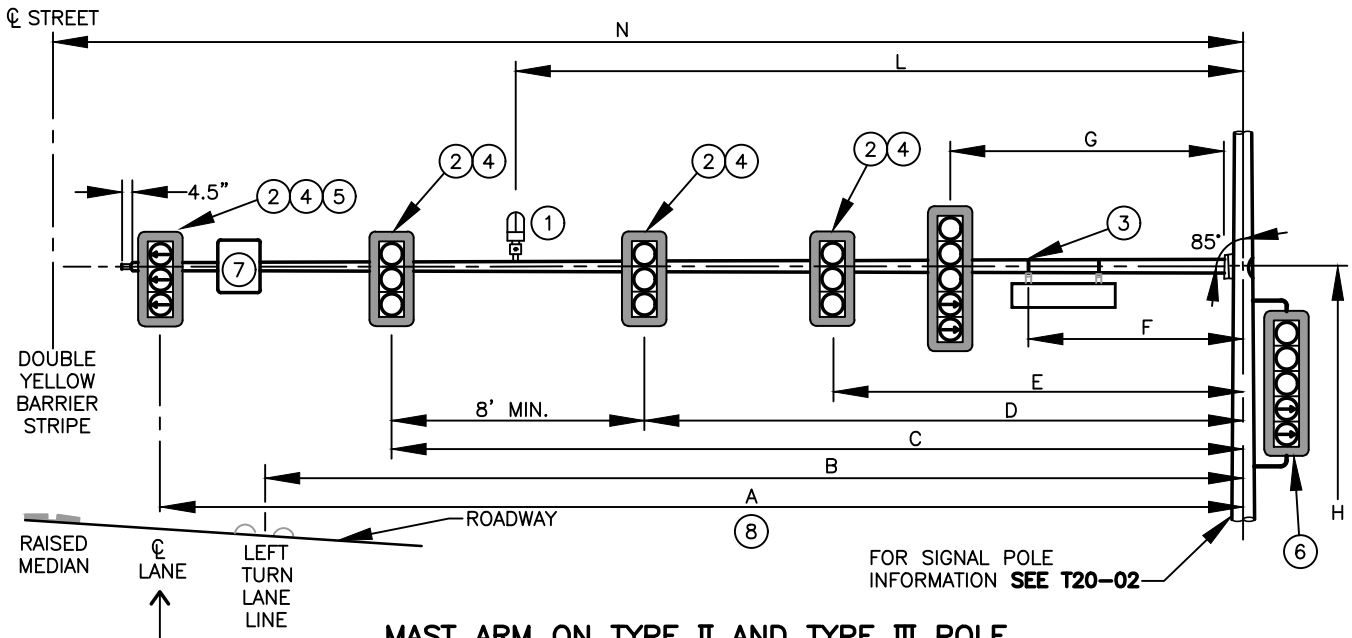

MAST ARM ON TYPE II AND TYPE III POLE

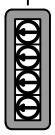

OPTIONAL 4-SECTION LEFT TURN FLASHING YELLOW ARROW SIGNAL HEAD PER CITY OF VANCOUVER TRAFFIC ENGINEERING MANAGER'S APPROVAL

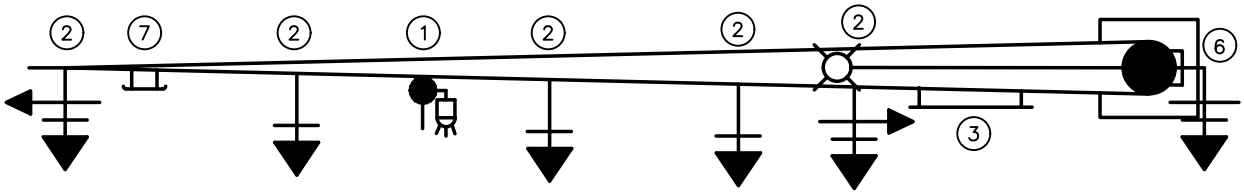

NOTES:

1. INSTALL COMBINATION PRE-EMPTION DETECTOR/INDICATOR LIGHT PER THE POLE SCHEDULE, LOCATION L (**SEE T20-11A**). SHALL BE FIELD DRILLED AND TAPPED.
2. TENONS SHALL BE LOCATED AT POSITIONS INDICATED ON THE POLE SCHEDULE. TENONS SHALL BE WELDED DURING ARM FABRICATION PRIOR TO GALVANIZING (**SEE T20-13**).
3. INSTALL STREET NAME SIGN ON MOUNTING BRACKET LOCATED ON BOTTOM OF ARM AT DISTANCE F AND DISTANCE F MINUS 6'. DISTANCE F SHALL ALWAYS BE LESS THAN DISTANCE E, (**SEE T20-07**).
4. ALL TRAFFIC SIGNAL INDICATIONS SHALL BE 12" DIAMETER, ALUMINUM HOUSING, TUNNEL VISORS, AND BACKPLATES SHALL BE PAINTED BLACK UNLESS OTHERWISE SPECIFIED ON THE PLANS.
5. 3-SECTION OR 4-SECTION ARROW HEAD AT END OF ARM.
6. SEE T20-02 FOR SIGNAL ON SIDE OF POLE.
7. INSTALL SIGN PER T20-08.
8. SEE POLE SCHEDULE FOR LETTER DIMENSIONS.

REV NO.	DATE	BY	APPR
1	7/14	RAW	CJC
2	1/15	RAW	CJC
3	4/18	RAW	CJC
4	7/18	RAW	CJC
5	7/19	RAW	CJC
6	9/21	RAW	CJC

PUBLIC WORKS – STREETS AND TRANSPORTATION

APPROVED BY: TRAFFIC ENGINEER MANAGER

APPROVED DATE: 9/1/2021

CITY OF Vancouver WASHINGTON

MAST ARM CONFIGURATION FOR TYPE II AND TYPE III TRAFFIC SIGNAL STANDARDS

STANDARD PLAN NUMBER

T20-01

I:\CITYAPPS\AUTOCAD\STD_DETAILS\DRAWING_FILES\T20-01

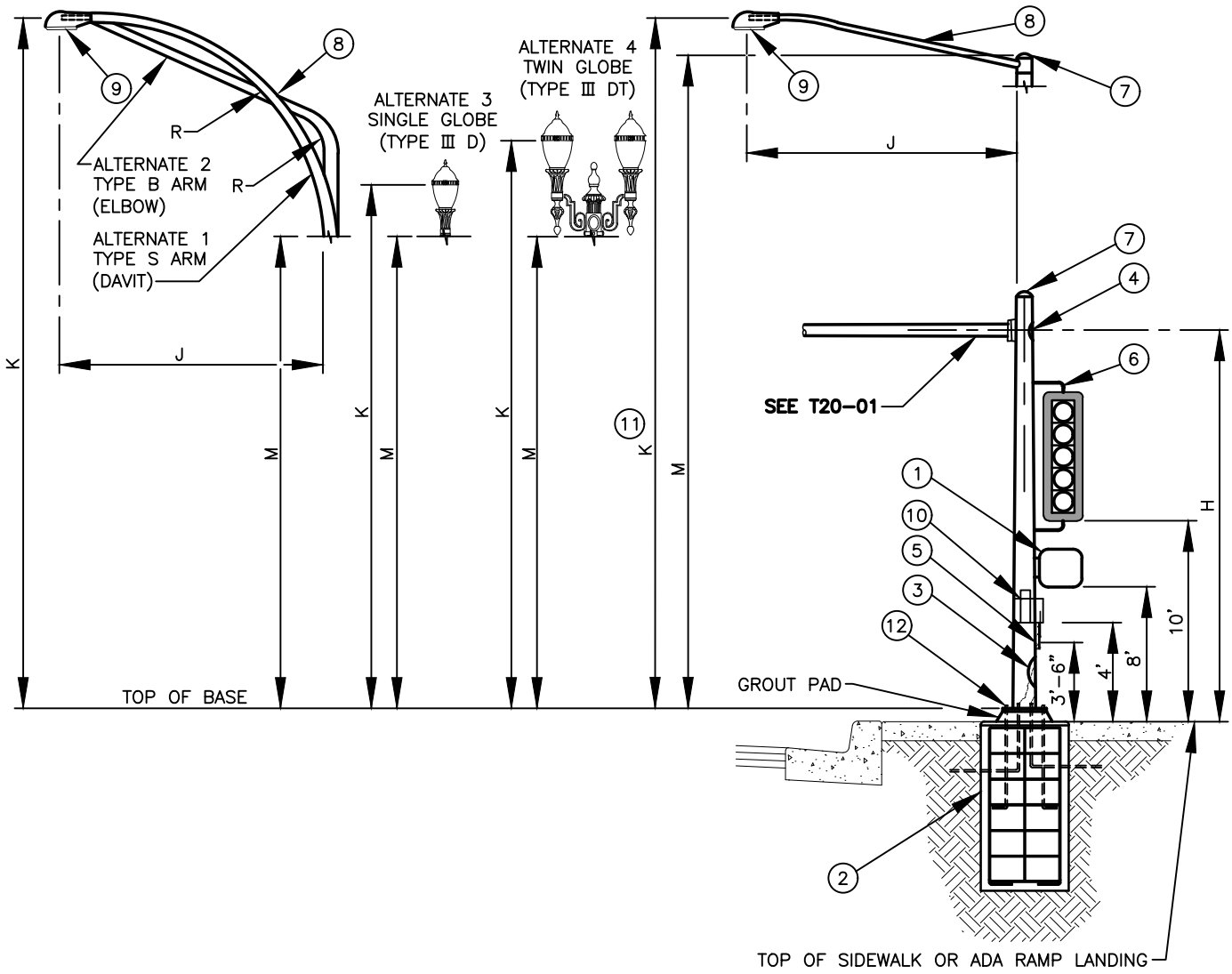

NOTES:

1. INSTALL PEDESTRIAN SIGNAL AT ORIENTATION PER PLANS WITH TYPE E MOUNT ON SIDE OF POLE. SEE T20-09D AND WSDOT STANDARD PLAN J-75.10-xx.
2. SEE **TYPE II AND TYPE III TRAFFIC SIGNAL POLE FOUNDATION DETAIL T20-15** AND SPECIFICATIONS.
3. PROVIDE COVERED 5" X 7" HAND HOLE AT 180° FROM MAST ARM (TYP.).
4. PROVIDE COVERED 5" X 7" HAND HOLE AT 180° FROM ARM.
5. INSTALL **ADA PEDESTRIAN AUDIBLE PUSH BUTTON ASSEMBLY** SEE **DETAIL T20-09B** (UNLESS SPECIFIED OTHERWISE) WITH ARROW POINTING TOWARDS CROSSWALK. SEE PLANS FOR ORIENTATION.
6. INSTALL SIGNAL ON SIDE OF POLE WITH TYPE K MOUNTING, SEE WSDOT STANDARD PLAN J-75.10-xx.
7. TOP OF POLE SHALL BE COVERED.
8. STANDARD SAFETY LIGHT MAST ARM. ALTERNATE ARMS 1 AND 2 ARE WSDOT STANDARDS TO BE USED ONLY IN SPECIAL CASES. LOCATE ARM AT 0° ABOVE MAST ARM, EXCEPT AS INDICATED ON POLE SCHEDULE AND SIGNAL PLANS.
9. INSTALL LUMINAIRE. (SEE **POLE SCHEDULE** FOR FIXTURE DETAILS).
10. INSTALL RECESSED TERMINAL COMPARTMENT (SEE **DETAIL T20-03**) 225° FROM ARM UNLESS OTHERWISE SPECIFIED. **ALL WIRING TO POLE FROM CONTROLLER CABINET SHALL TERMINATE IN THE COMPARTMENT**.
11. FIXTURE MOUNTING HEIGHT K SHALL BE 30' OR AS SPECIFIED IN POLE SCHEDULE.
12. CLAM SHELL BASE DECORATIVE COVER REQUIRED ON TYPE II D, TYPE III D, TYPE II DT AND TYPE III DT STANDARDS.

REV NO.	DATE	BY	APPR
1	8/08	RAW	CJC
2	7/14	RAW	CJC
3	1/15	RAW	CJC
4	7/18	RAW	CJC
5	7/19	RAW	CJC
6	9/21	RAW	CJC

PUBLIC WORKS – STREETS AND TRANSPORTATION

APPROVED BY: TRAFFIC ENGINEER MANAGER

APPROVED DATE: 9/1/2021

CITY OF Vancouver WASHINGTON

POLE CONFIGURATION FOR TYPE II, TYPE III, TYPE B AND TYPE S TRAFFIC SIGNAL STANDARDS

STANDARD PLAN NUMBER

T20-02

I:\CITYAPPS\AUTOCAD\STD_DETAILS\DRAWING_FILES\T20-02

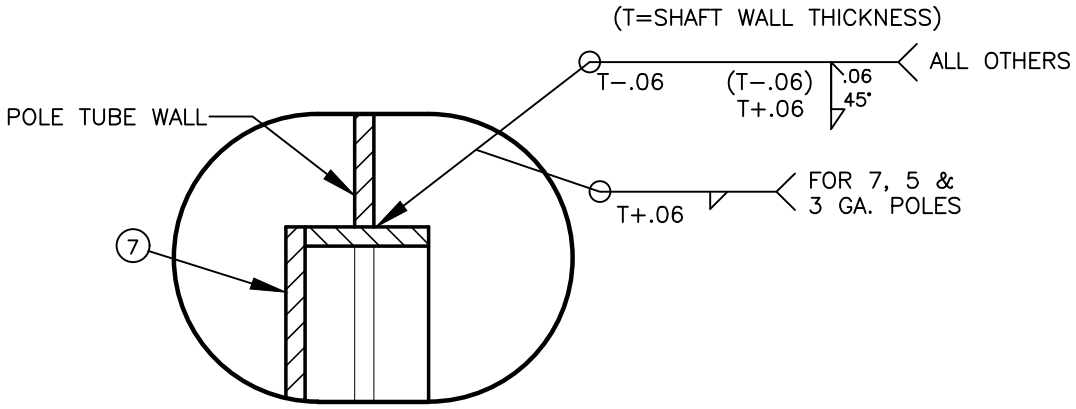

SECTION AA

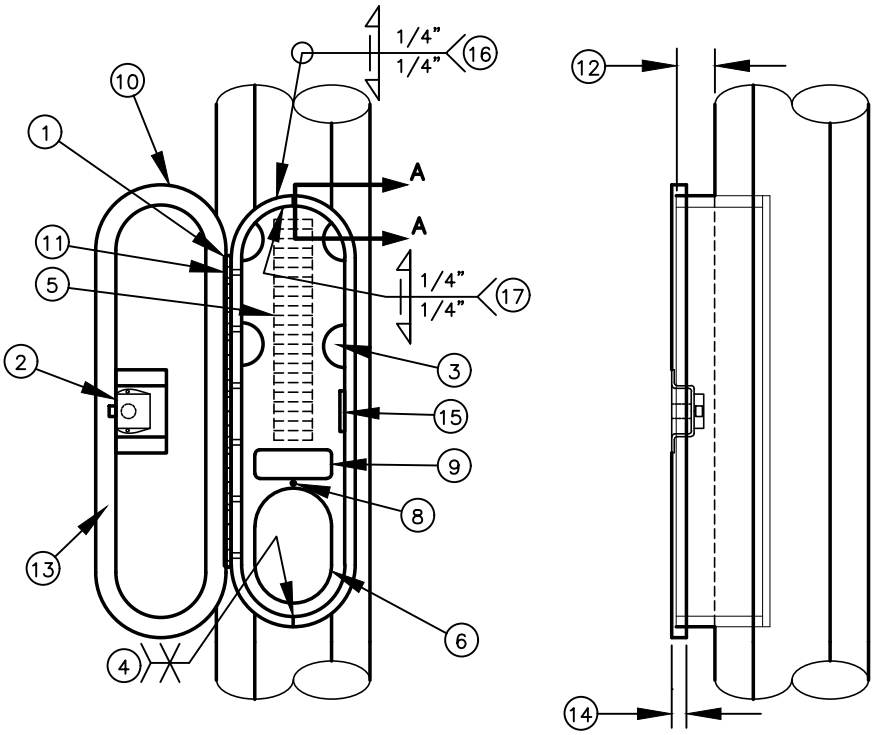

RECESSED TERMINAL COMPARTMENT DETAIL

NOTES:

1. 22" LONG STAINLESS STEEL HINGE
2. "BEST" BRAND SLAM-LOCK
3. 1 - R1/2" - 4 PLACES.
4. B-U3-GF BOTH SEAMS.
5. (2) 20 SECTION TERMINAL BLOCK
6. 4" x 6" HANDHOLD
7. 6" x 29" (I.D.) TERMINAL COMPARTMENT, 1/2" x 4" STEEL FRAME, 3/8" THICK BACK PLATE.
8. 5/16" - 18 TAPPED HOLE IN PLATE W/ 5/16" x 1" GROUNDING BOLT.
9. 2" x 4" WIRE HOLE (OTHER HOLES AS NEEDED FOR WIRING).
10. STAINLESS STEEL COVER 30-1/2" X 7-3/4" X 1/16" THK.
11. (6) 1" X 3/16" STAINLESS STEEL SCREWS (W/BOLT & WASHER)
12. 1/2" MAX. PROJECTION AT C.L. OF HANDHOLE (TOP AND BOTTOM).
13. 1" X 1/2" FOAM GASKET
14. 1" WIDE FLANGE ON COVER
15. 1/4" X 5/8" FLAT BAR
16. TC-L1-GF IN AND OUT OF TUBE.
17. TC-L1-GF BOTH SIDES OF PLATE.

REV NO.	DATE	BY	APPR
1	3/06	RAW	AGE
2	2/07	RAW	AGE
3	8/08	RAW	AGE
4	7/14	RAW	AGE
5	2/21	OIS	CJC
6	9/21	RAW	CJC

PUBLIC WORKS - STREETS AND TRANSPORTATION

APPROVED BY: TRAFFIC ENGINEER MANAGER

APPROVED DATE: 9/1/2021

CITY OF Vancouver WASHINGTON

RECESSED TERMINAL COMPARTMENT TYPE II, TYPE III, TYPE B AND TYPE S TRAFFIC SIGNAL STANDARDS

STANDARD PLAN NUMBER

T20-03

I:\CITYAPPS\AUTOCAD\STD_DETAILS\DRAWING_FILES\T20-03

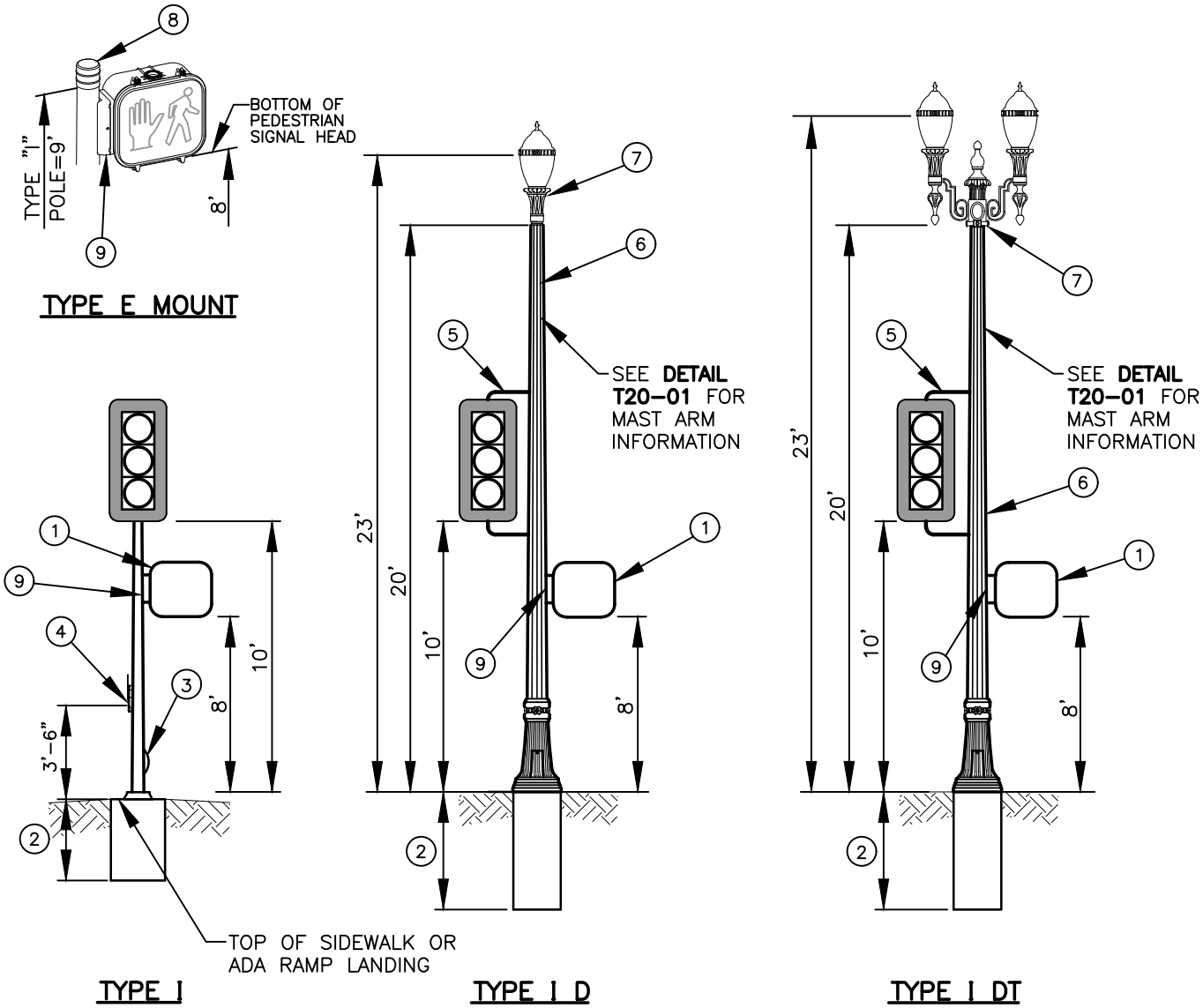

NOTES:

1. INSTALL PEDESTRIAN SIGNAL AT ORIENTATION PER PLANS WITH TYPE E MOUNTING ON SIDE OF POLE (SEE **T20-09D**).
2. SEE **TYPE I, TYPE I D, TYPE I DT, TYPE PS AND TYPE PPB TRAFFIC SIGNAL POLE FOUNDATION DETAIL T20-16** AND SPECIFICATIONS FOR FOUNDATION INFORMATION.
3. PROVIDE COVERED HAND HOLE.
4. INSTALL **ADA PEDESTRIAN AUDIBLE PUSH BUTTON ASSEMBLY** SEE **DETAIL T20-09B** (UNLESS SPECIFIED OTHERWISE) WITH ARROW POINTING TOWARDS CROSSWALK. SEE PLANS FOR ORIENTATION.
5. INSTALL SIGNAL ON SIDE OF POLE WITH TYPE K MOUNT (SEE WSDOT STANDARD PLAN J-75.10-xx).
6. USE TYPE DT LIGHT STANDARD FOR TYPE I D AND TYPE I DT TRAFFIC SIGNAL STANDARDS.
7. PROVIDE 110 V AC RECEPTACLE.
8. SLIPFITTER AT TOP OF POLE.
9. SEE WSDOT STANDARD PLAN J-75.10-xx FOR TYPE E MOUNT.

REV NO.	DATE	BY	APPR
1	2/07	RAW	AGE
2	8/08	RAW	AGE
3	7/14	RAW	CJC
4	4/18	RAW	CJC
5	7/19	RAW	CJC
6	9/21	RAW	CJC

PUBLIC WORKS – STREETS AND TRANSPORTATION

APPROVED BY: TRAFFIC ENGINEER MANAGER

APPROVED DATE: 9/1/2021

CITY OF Vancouver WASHINGTON

TYPE I, TYPE I-D AND TYPE I-DT TRAFFIC SIGNAL STANDARD

STANDARD PLAN NUMBER T20-04

I:\CITYAPPS\AUTOCAD\STD_DETAILS\DRAWING_FILES\T20-04

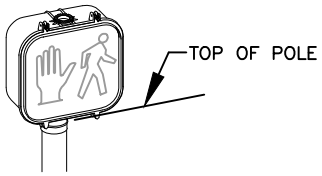

TYPE "D" MOUNT

TYPE PS TOP MOUNT

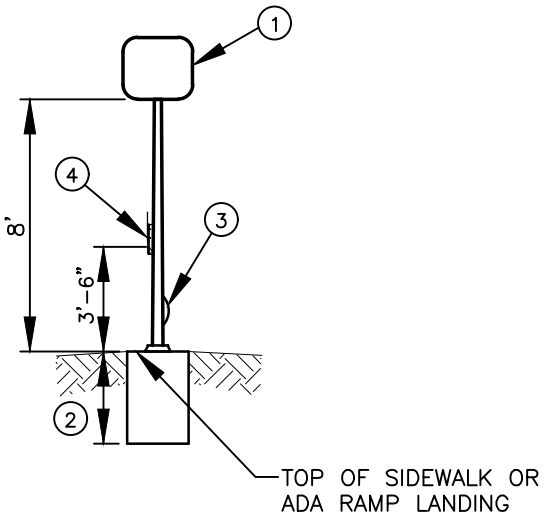

TYPE PS

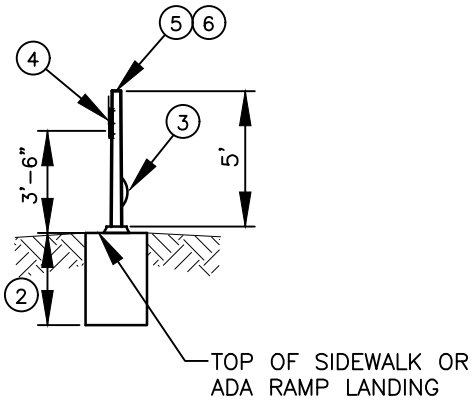

TYPE PPB

NOTES:

1. INSTALL PEDESTRIAN SIGNAL FACING TOWARD CENTER OF THE CROSSWALK. SEE **PEDESTRIAN SIGNAL HEAD OPTIONS DETAIL T20–09D** AND WSDOT STANDARD PLANS J–20.16–xx AND J–20.20–xx. WHEN MOUNTING TWO (2) PEDESTRIAN SIGNALS USE TYPE 1 POLE (STD. PLAN T20–04).
2. SEE **TYPE I, TYPE I D, TYPE I DT, TYPE PS AND TYPE PPB TRAFFIC SIGNAL POLE FOUNDATION DETAIL T20–16** AND SPECIFICATIONS FOR FOUNDATION INFORMATION. SEE WSDOT STANDARD PLANS J–20.11–xx (SHEETS 1 AND 2) WHEN INSTALLING FOUNDATION WITHIN CURB FOR MINIMIZING BUTTON REACH.
3. PROVIDE COVERED HAND HOLE.
4. INSTALL **ADA PEDESTRIAN AUDIBLE PUSH BUTTON ASSEMBLY** SEE **DETAIL T20–09B** (UNLESS SPECIFIED OTHERWISE) WITH ARROW POINTING TOWARD THE CROSSWALK. SEE PLANS FOR ORIENTATION.
5. TOP OF POLE SHALL BE COVERED.
6. TYPE PPB STANDARD IS 4" DIAMETER SCHEDULE 40 STEEL PIPE WITH POLE CAP, HAND HOLE AND GROUNDING LUG.

REV NO.	DATE	BY	APPR
1	8/08	RAW	AGE
2	7/14	RAW	AGE
3	8/14	RAW	CJC
4	7/19	RAW	CJC
5	2/21	RAW	CJC
6	9/21	RAW	CJC

PUBLIC WORKS – STREETS AND TRANSPORTATION

APPROVED BY: TRAFFIC ENGINEER MANAGER

APPROVED DATE: 9/1/2021

CITY OF Vancouver WASHINGTON

TYPE PS AND TYPE PPB TRAFFIC SIGNAL STANDARD

STANDARD PLAN NUMBER T20–05

I:\CITYAPPS\AUTOCAD\STD_DETAILS\DRAWING_FILES\T20–05

NOTES:

1. RAMPS TO BE CENTERED IN CROSSWALKS.
2. RAMPS TO BE CONSTRUCTED SEPARATELY AND ISOLATED BY EXPANSION JOINT MATERIAL.
3. RAMP WING MAY BE REPLACED WITH TYPE E–1 CURB SIMILAR TO **CURB RAMP** DETAIL IF OBSTRUCTION OR PLANTER PREVENTS PEDESTRIAN TRAFFIC IN WING AREA.
4. SURROUNDING SIDEWALK CROSS SLOPE TO BE 2% MAX. RADIALLY AROUND CORNER SECTION.
5. FOR SPOT ELEVATION CALL OUTS (⬡),SEE **CIVIL PLANS** OR **ADA RAMP INFORMATION PLAN** FOR SPOT ELEVATION TABLE FOR THESE ELEVATIONS.
6. PEDESTRIAN SIGNAL HEADS SHALL LINE UP WITHIN THE CROSSWALK.
7. THE PUSHBUTTON SHALL BE LOCATED AS CLOSE AS POSSIBLE TO THE CROSSWALK LINE FURTHEST FROM THE CENTER OF THE INTERSECTION AND AS CLOSE AS POSSIBLE TO THE CURB RAMP. SEE **2009 MUTCD SECTION 4E.08** FOR ADDITIONAL INFORMATION IN REGARDS TO PUSHBUTTON PLACEMENT.

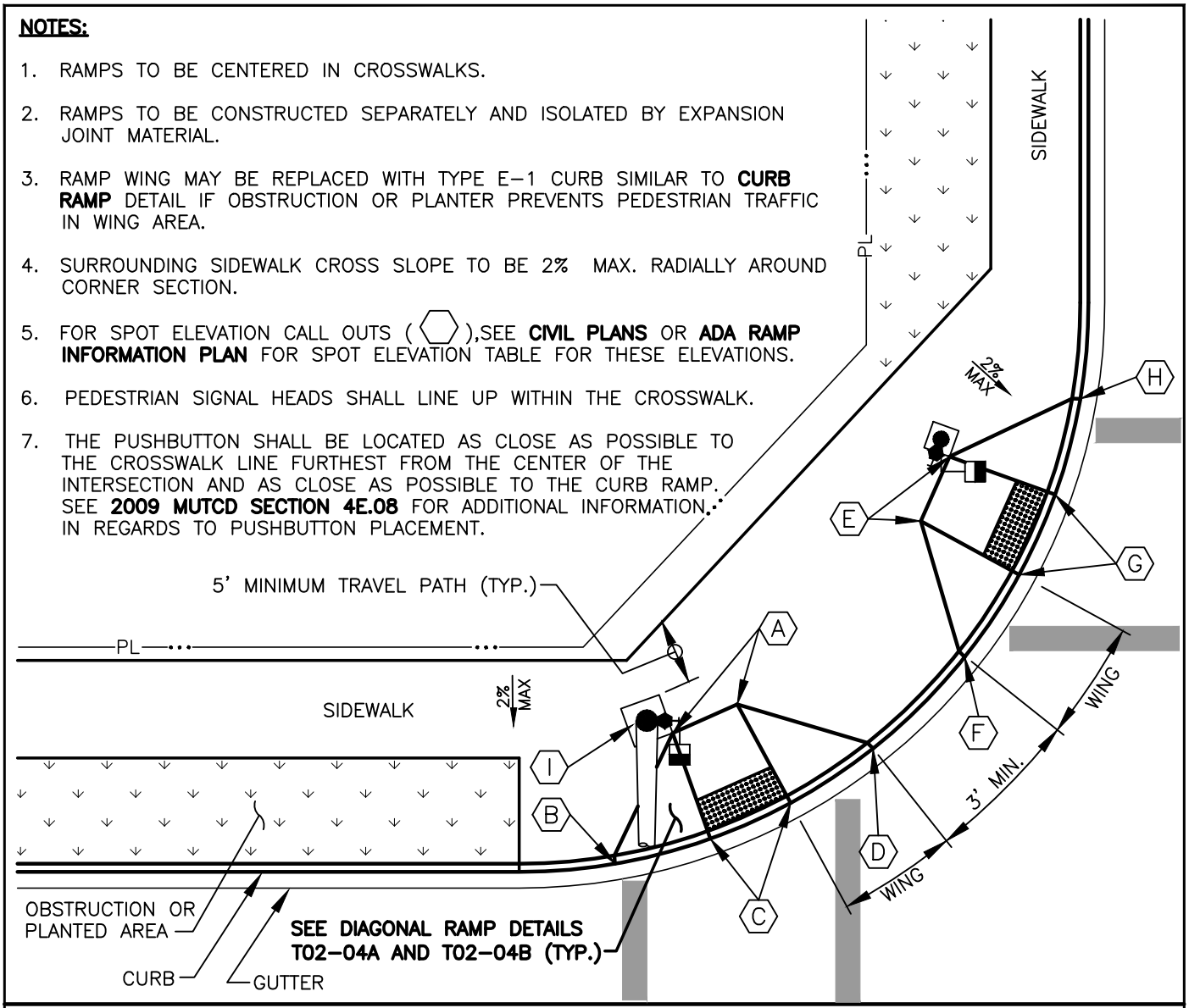

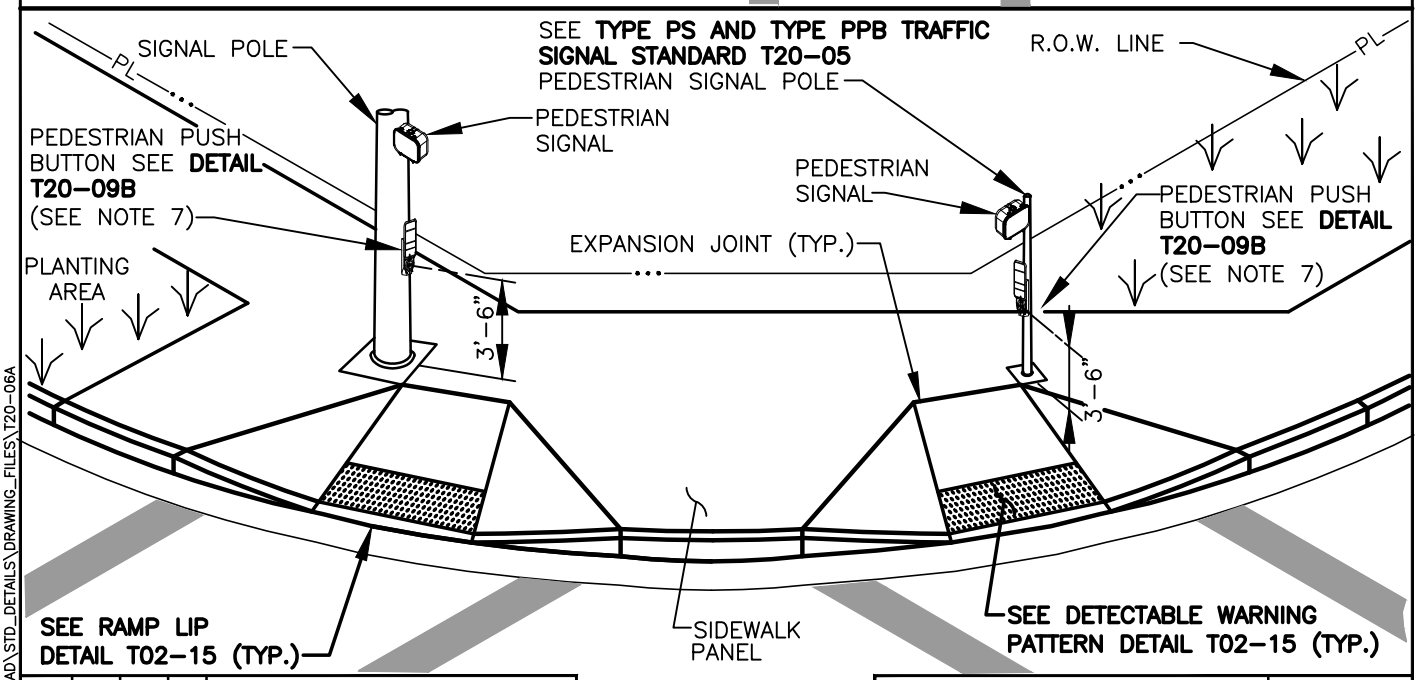

REV NO.	DATE	BY	APPR
1	2/07	RAW	AGE
2	8/08	RAW	AGE
3	7/14	RAW	CJC
4	1/15	RAW	CJC
5	9/21	RAW	CJC

PUBLIC WORKS – STREETS AND TRANSPORTATION

APPROVED BY: TRAFFIC ENGINEER MANAGER

APPROVED DATE: 9/1/2021

CITY OF Vancouver WASHINGTON

DOUBLE DIAGONAL RAMP PLACEMENT FOR TRAFFIC SIGNAL STANDARD

STANDARD PLAN NUMBER

T20–06A

P:\CITYAPPS\AUTOCAD\STD_DETAILS\DRAWING_FILES\T20–06A

NOTES:

1. RAMPS TO BE CENTERED IN CROSSWALKS.
2. RAMPS TO BE CONSTRUCTED SEPARATELY AND ISOLATED BY EXPANSION JOINT MATERIAL.
3. RAMP WING MAY BE REPLACED WITH TYPE E-1 CURB SIMILAR TO **CURB RAMP** DETAIL IF OBSTRUCTION OR PLANTER PREVENTS PEDESTRIAN TRAFFIC IN WING AREA.
4. SURROUNDING SIDEWALK CROSS SLOPE TO BE 2% MAX. RADIALLY AROUND CORNER SECTION.
5. FOR SPOT ELEVATION CALL OUTS (⬡), SEE **CIVIL PLANS** OR **ADA RAMP INFORMATION PLAN** FOR SPOT ELEVATION TABLE FOR THESE ELEVATIONS.
6. PEDESTRIAN SIGNAL HEADS SHALL LINE UP WITHIN THE CROSSWALK.
7. THE PUSHBUTTON SHALL BE LOCATED AS CLOSE AS POSSIBLE TO THE CROSSWALK LINE FURTHEST FROM THE CENTER OF THE INTERSECTION AND AS CLOSE AS POSSIBLE TO THE CURB RAMP. SEE **2009 MUTCD SECTION 4E.08** FOR ADDITIONAL INFORMATION IN REGARDS TO PUSHBUTTON PLACEMENT.

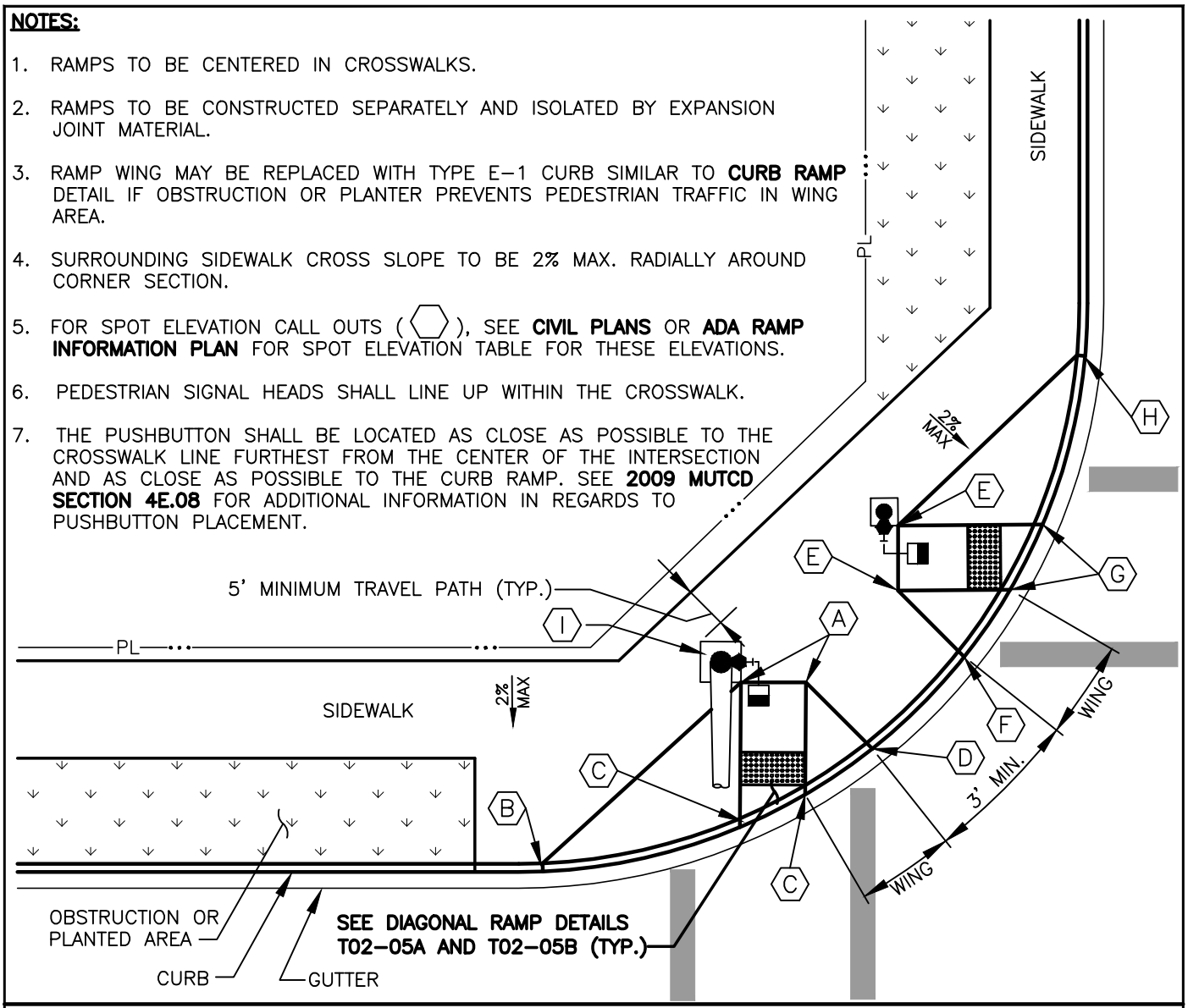

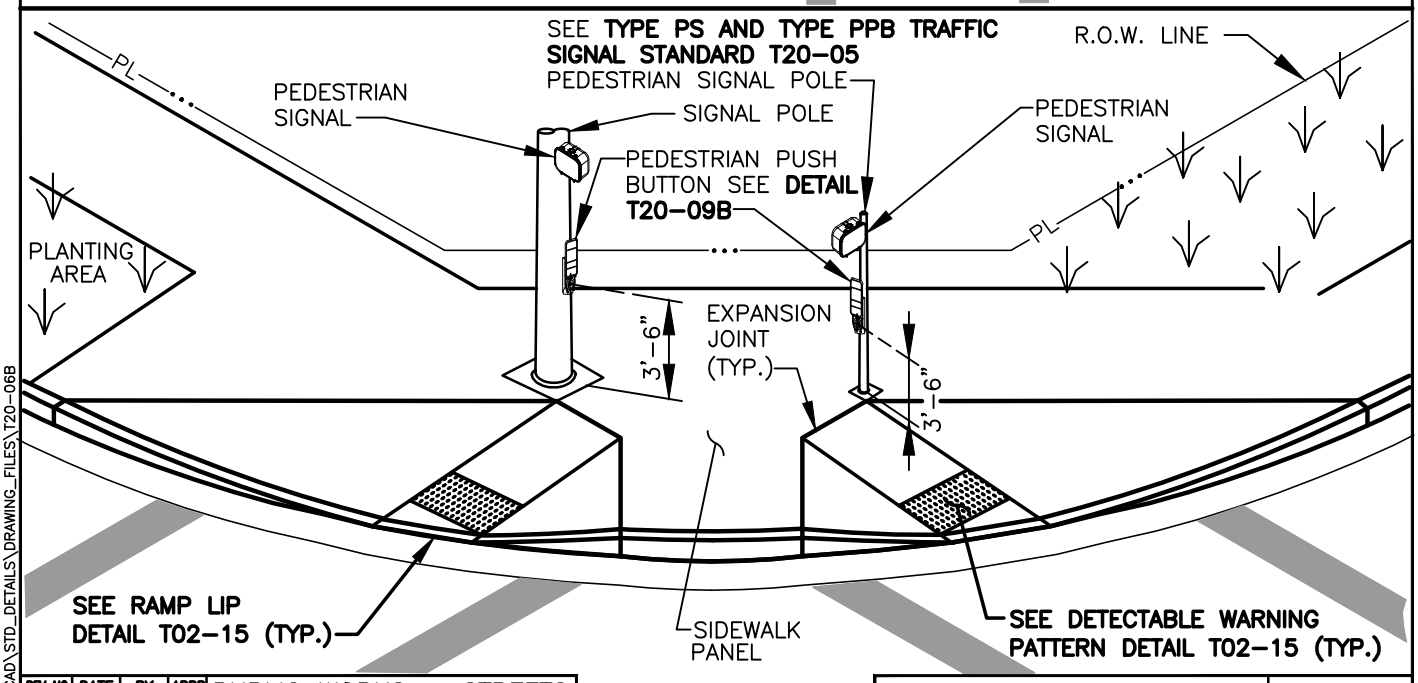

REV NO.	DATE	BY	APPR
1	2/07	RAW	AGE
2	8/08	RAW	AGE
3	7/14	RAW	CJC
4	1/15	RAW	CJC
5	9/21	RAW	CJC

PUBLIC WORKS – STREETS AND TRANSPORTATION

APPROVED BY: TRAFFIC ENGINEER MANAGER

APPROVED DATE: 9/1/2021

CITY OF Vancouver WASHINGTON

DOUBLE DIRECTIONAL RAMP PLACEMENT FOR TRAFFIC SIGNAL STANDARD

STANDARD PLAN NUMBER

T20-06B

I:\CITYAPPS\AUTOCAD\STD_DETAILS\DRAWING_FILES\T20-06B

NOTES:

1. RAMPS TO BE CENTERED IN CROSSWALKS.
2. RAMPS TO BE CONSTRUCTED SEPARATELY AND ISOLATED BY EXPANSION JOINT MATERIAL.
3. RAMP WING MAY BE REPLACED WITH TYPE E–1 CURB SIMILAR TO **CURB RAMP** DETAIL IF OBSTRUCTION OR PLANTER PREVENTS PEDESTRIAN TRAFFIC IN WING AREA.
4. SURROUNDING SIDEWALK CROSS SLOPE TO BE 2% MAX. RADIALLY AROUND CORNER SECTION.
5. FOR SPOT ELEVATION CALL OUTS (⬡),SEE **CIVIL PLANS** OR **ADA RAMP INFORMATION PLAN** FOR SPOT ELEVATION TABLE FOR THESE ELEVATIONS.
6. PEDESTRIAN SIGNAL HEADS SHALL LINE UP WITHIN THE CROSSWALK, IF THE RADIUS FOR THE CURB RETURN IS TOO LARGE AN ADDITIONAL TYPE PS POLE MAY BE REQUIRED, OTHERWISE TYPE PPB POLES CAN BE USED FOR THE PUSH BUTTONS. SEE DETAIL **TYPE PS AND TYPE PPB TRAFFIC SIGNAL STANDARD T20–05.**
7. TYPE PPB POLES USED AT THE ADA RAMPS CAN BE MOUNTED ON TO THE CURB BEHIND THE ADA RAMP, SEE **WSDOT STANDARD PLAN J–20.11–xx** FOR ADDITIONAL INFORMATION.
8. THE PUSHBUTTON SHALL BE LOCATED AS CLOSE AS POSSIBLE TO THE CROSSWALK LINE FURTHEST FROM THE CENTER OF THE INTERSECTION AND AS CLOSE AS POSSIBLE TO THE CURB RAMP. SEE **2009 MUTCD SECTION 4E.08** FOR ADDITIONAL INFORMATION IN REGARDS TO PUSHBUTTON PLACEMENT.

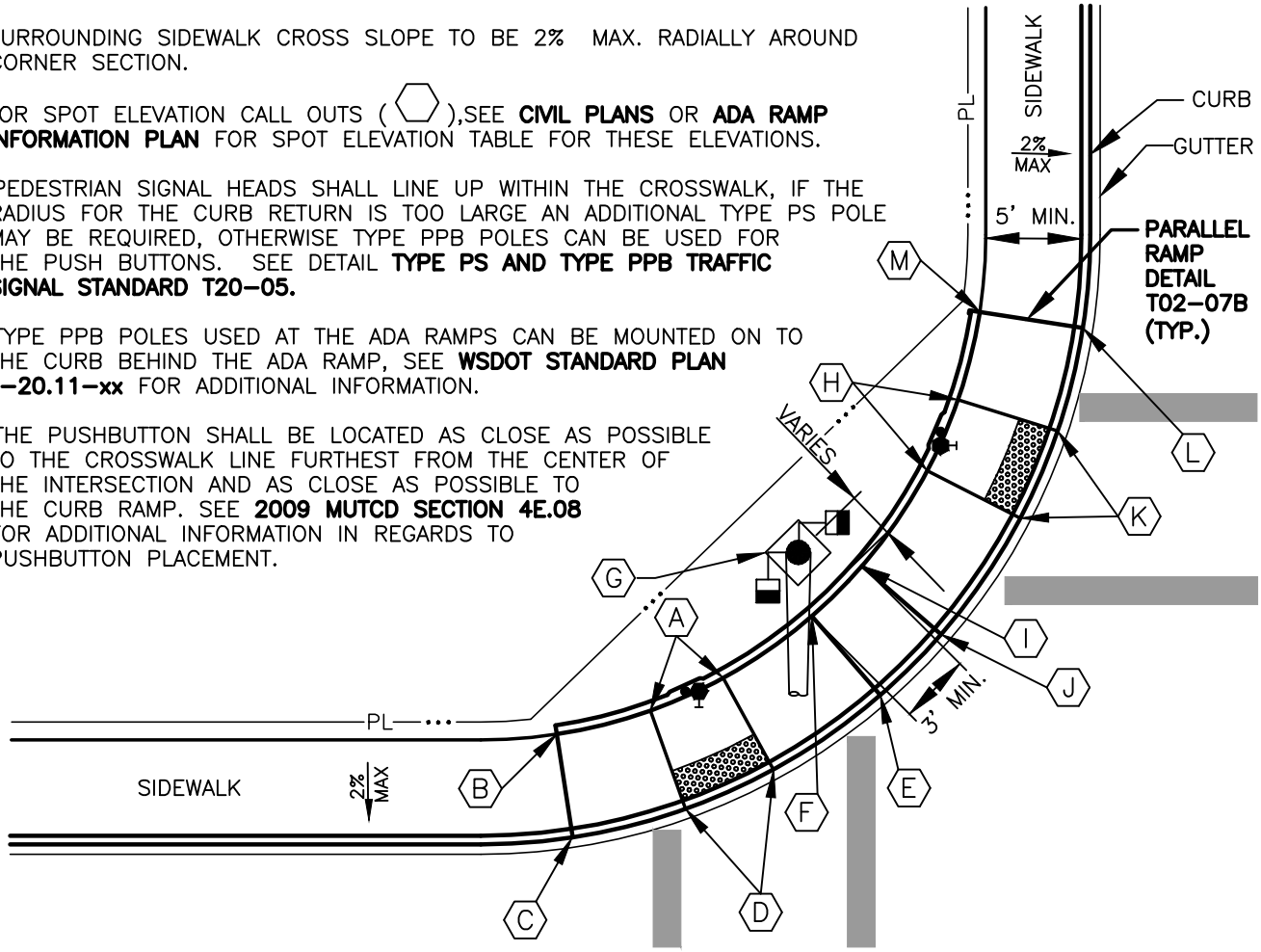

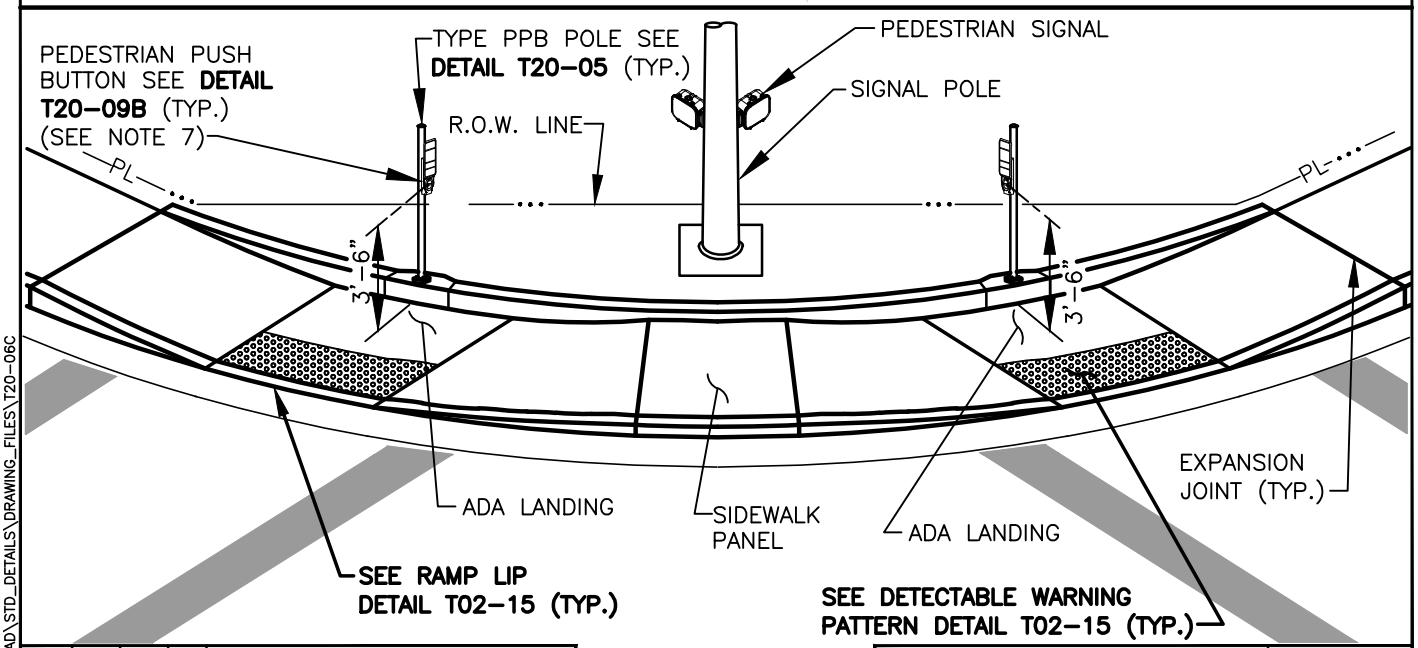

REV NO.	DATE	BY	APPR
1	2/07	RAW	AGE
2	8/08	RAW	AGE
3	7/14	RAW	CJC
4	1/15	RAW	CJC
5	9/21	RAW	CJC

PUBLIC WORKS – STREETS AND TRANSPORTATION

APPROVED BY: TRAFFIC ENGINEER MANAGER

APPROVED DATE: 9/1/2021

CITY OF Vancouver WASHINGTON

DOUBLE PARALLEL RAMP PLACEMENT FOR TRAFFIC SIGNAL STANDARD

STANDARD PLAN NUMBER

T20–06C

I:\CITYAPPS\AUTOCAD\STD_DETAILS\DRAWING_FILES\T20–06C

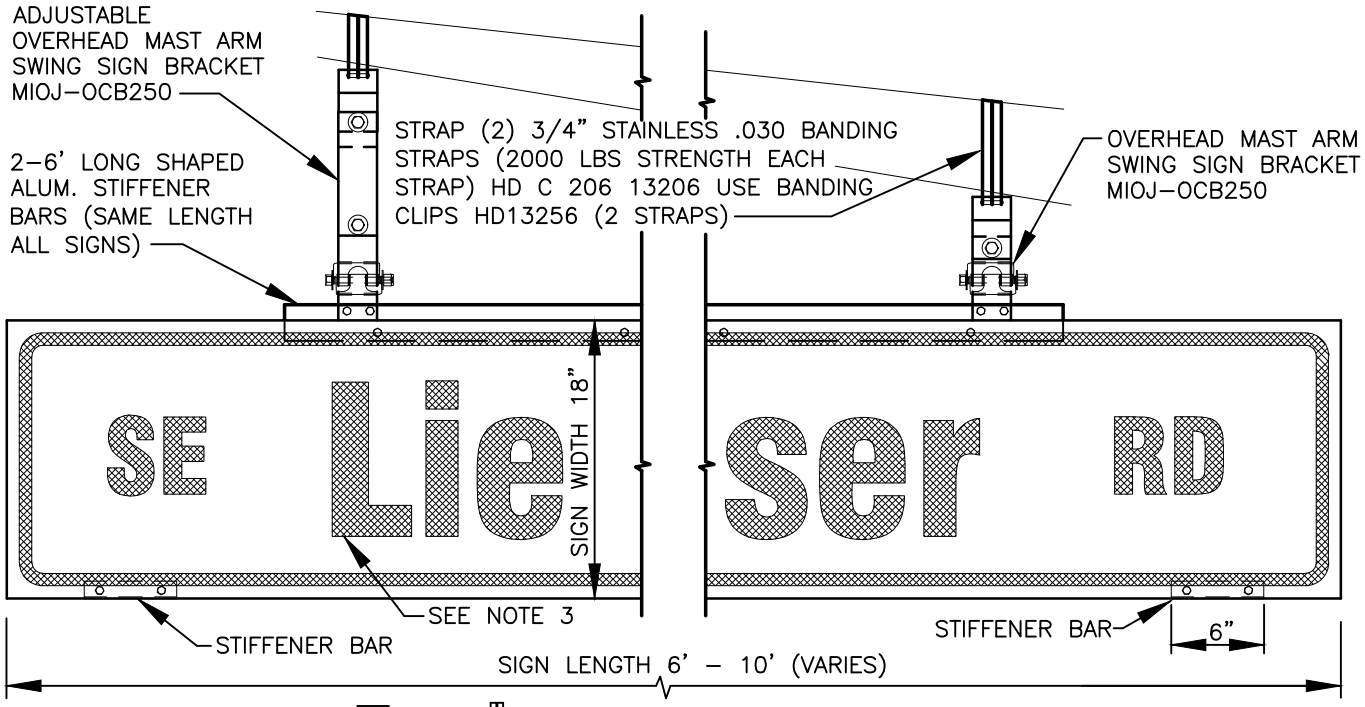

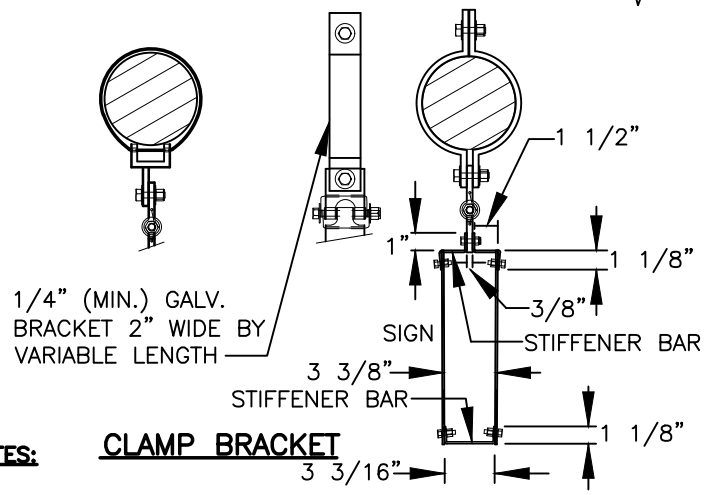

CLAMP BRACKET

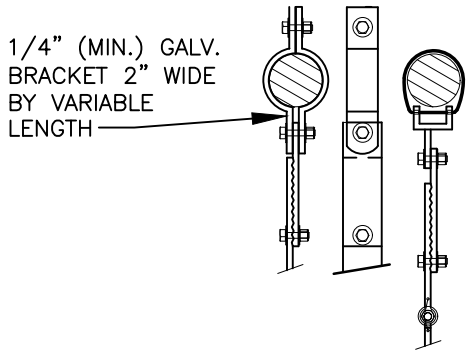

CLAMP BRACKET STRAP

NOTES:

1. STREET NAME SIGN SHALL BE MADE OF .125 ALUMINUM SHEETING, FLAT STOCK, 18" WIDE BY 6' TO 10' IN LENGTH, (IN 6" INCREMENTS).
2. SIGN FACE SHALL BE FABRICATED FROM CUBED CORNERED LENS (VIP, TYPE A) REFLECTIVE MATERIAL. FACE LEGEND AND BORDER SHALL BE WHITE ON A GREEN BACKGROUND, EXCEPT IN THE DOWNTOWN AREA OR ON TYPE II DT AND TYPE III DT TRAFFIC SIGNAL STANDARDS, WHICH SHALL HAVE A BROWN BACKGROUND.
3. LETTERING SHALL BE A COMBINATION OF UPPER AND LOWER CASE LETTERS PER FHWA STANDARDS. THE PREFIX SHALL BE ABBREVIATED UPPER CASE LETTERS. THE STREET NAME SHALL BE LOWER CASE LETTERS WITH THE FIRST LETTER UPPER CASE. THE SUFFIX AND PREFIX SHALL BE ABBREVIATED UPPER CASE AND 6" HIGH, EXCEPT WHEN TWO LINES OF COPY ARE REQUIRED, THEN THE HEIGHT SHALL BE 5". THE CAPITAL LETTERS OF THE COPY SHALL BE 12" HIGH, EXCEPT WHEN TWO LINES OF COPY ARE REQUIRED THE COPY SHALL BE 10" HIGH.
4. STIFFENER BARS SHALL BE .125 ALUMINUM SHAPED TO DIMENSIONS ABOVE.
5. COMPLETE READY–TO–MOUNT STREET NAME SIGN ASSEMBLY NOT TO EXCEED 65 POUNDS IN WEIGHT.
6. ALL SIGN MATERIALS AND ATTACHMENT HARDWARE SHALL CONFORM TO MUTCD AND WSDOT STANDARD SPECIFICATIONS.
7. WHEN SIGN REQUIRES TWO MESSAGE LINES, WIDTH SHALL BE INCREASED TO 30" AND AN ARROW SHALL BE ADDED TO BOTH MESSAGE LINES (LEFT ARROW LEFT OF THE DIRECTION AND RIGHT ARROW ON THE RIGHT).
8. ENGINEER SHALL APPROVE FACE COPY PRIOR TO FABRICATION.
9. SEE OVERHEAD MOUNTED STREET NAME SIGNS (SNS) SECTION OF THE CITY OF VANCOUVER AMENDMENTS TO THE STANDARD SPECIFICATIONS FOR TRAFFIC CONTROL DEVICES AND LIGHTING FOR ADDITIONAL INFORMATION.

REV NO.	DATE	BY	APPR
1	3/06	RAW	AGE
2	2/07	RAW	AGE
3	8/08	RAW	AGE
4	7/14	RAW	CJC
5	4/18	RAW	CJC
6	9/21	RAW	CJC

PUBLIC WORKS – STREETS AND TRANSPORTATION

APPROVED BY: TRAFFIC ENGINEER MANAGER

APPROVED DATE: 9/1/2021

CITY OF Vancouver WASHINGTON

OVERHEAD STREET NAME SIGN MOUNTING AND FABRICATION DETAILS

STANDARD PLAN NUMBER

T20–07

I:\CITYAPPS\AUTOCAD\STD_DETAILS\DRAWING_FILES\T20–07

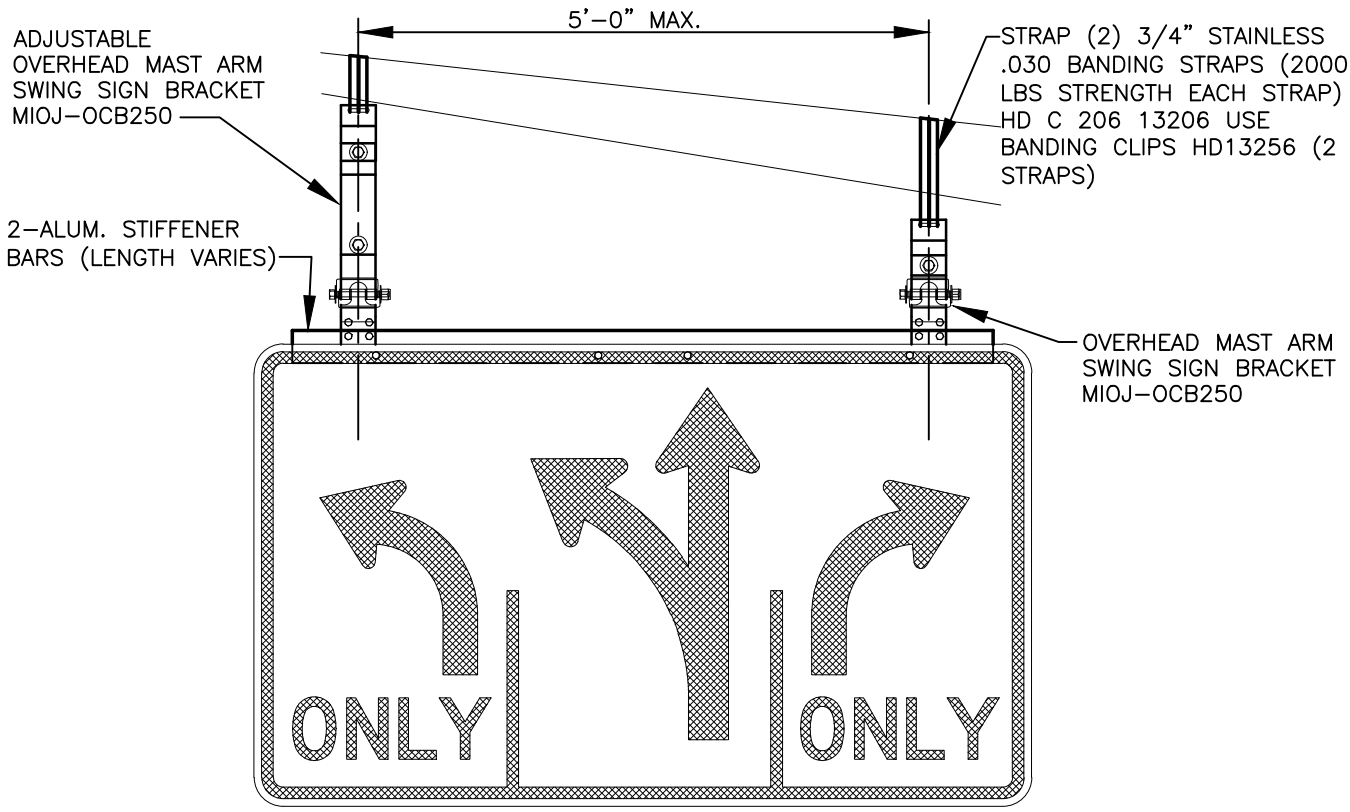

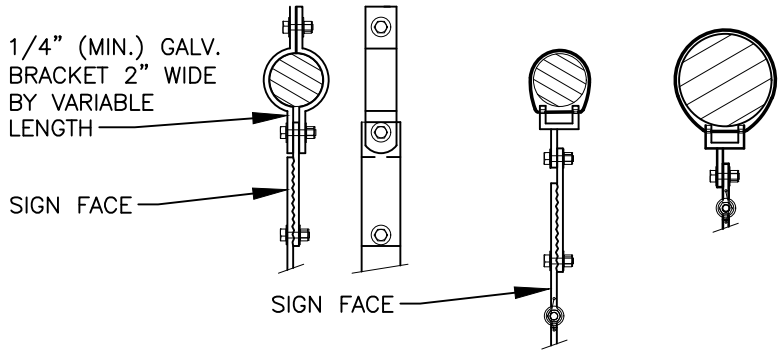

CLAMP BRACKET STRAP

NOTES:

1. SIGN SHALL BE OF .125 ALUMINUM SHEETING, FLAT STOCK, 18" WIDE BY 6' TO 10' IN LENGTH, (IN 6" INCREMENTS).
2. SIGN FACE SHALL BE FABRICATED FROM CUBED CORNERED LENS (VIP, TYPE A) REFLECTIVE MATERIAL. FACE LEGEND AND BORDER SHALL MATCH MUTCD AND WSDOT STANDARD SPECIFICATIONS.
3. STIFFENER BARS SHALL BE .125 ALUMINUM SHAPED.
4. COMPLETE READY-TO-MOUNT SIGN ASSEMBLY NOT TO EXCEED 65 POUNDS IN WEIGHT.
5. ALL SIGN MATERIALS AND ATTACHMENT HARDWARE SHALL CONFORM TO MUTCD AND WSDOT STANDARD SPECIFICATIONS.
6. ENGINEER SHALL APPROVE FACE COPY PRIOR TO FABRICATION.
7. THE SIZE OF THE SIGN WILL DETERMINE IF ONE OR TWO BRACKETS ARE NECESSARY. HAVE ENGINEERS APPROVAL PRIOR TO INSTALLATION.
8. FOR ALTERNATE OVERHEAD SIGN MOUNTING OPTION, SEE WSDOT STANDARD PLAN G-30.10-xx. HAVE ENGINEERS APPROVAL PRIOR TO USING ALTERNATE OPTION.

REV NO.	DATE	BY	APPR
1	8/04	RAW	AGE
2	3/06	RAW	AGE
3	2/07	RAW	AGE
4	8/08	RAW	AGE
5	1/15	RAW	CJC
6	9/21	RAW	CJC

PUBLIC WORKS - STREETS AND TRANSPORTATION

APPROVED BY: TRAFFIC ENGINEER MANAGER

APPROVED DATE: 9/1/2021

CITY OF Vancouver WASHINGTON

OVERHEAD SIGN MOUNTING DETAILS

STANDARD PLAN NUMBER T20-08

I:\CITYAPPS\AUTOCAD\STD_DETAILS\DRAWING_FILES\T20-08

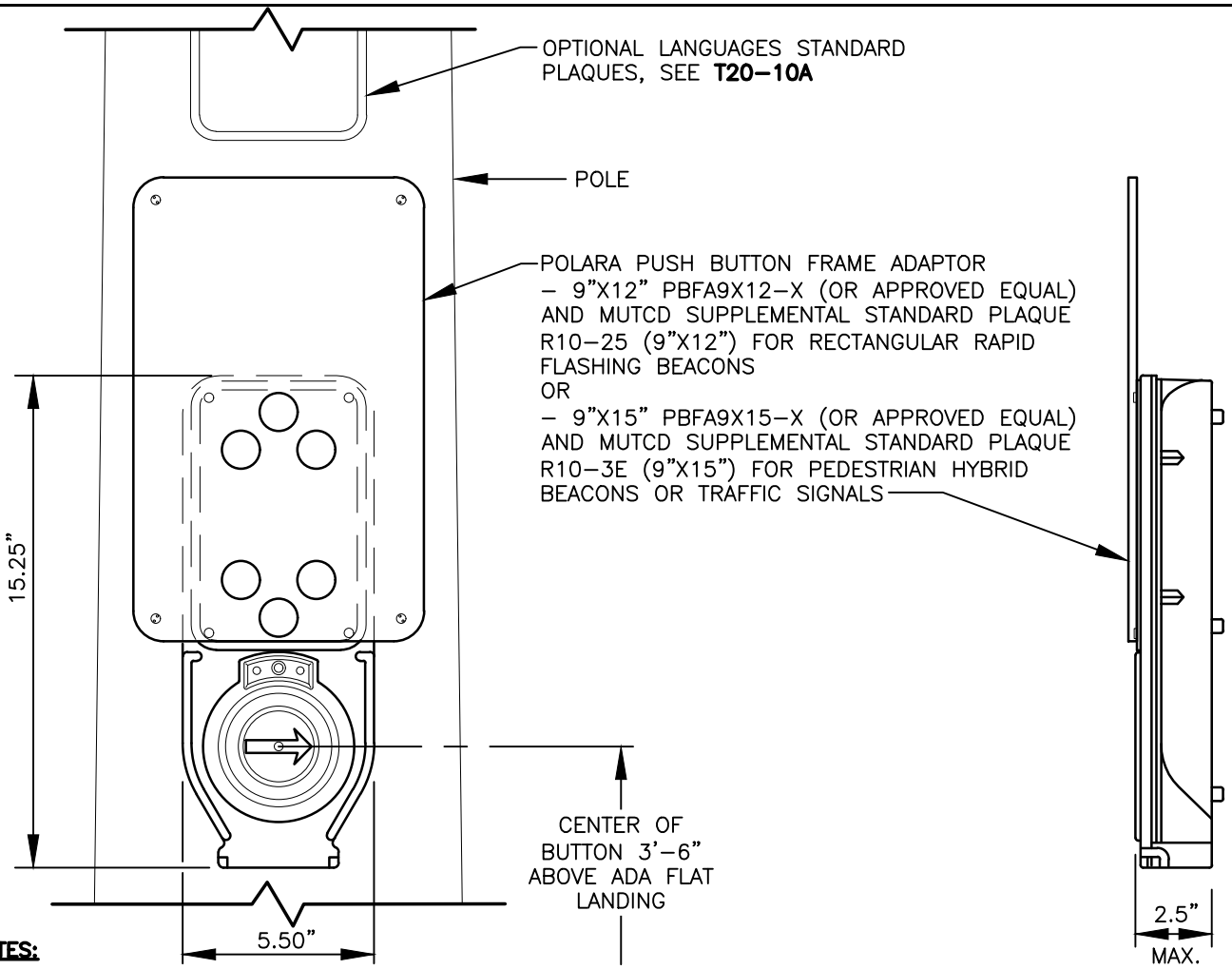

NOTES:

AUDIBLE – TACTILE PEDESTRIAN SIGNAL SYSTEM FOR ADA PEDESTRIAN PUSH BUTTON;

1. SHALL CONSIST OF 2–12 PUSH BUTTON STATIONS (MAXIMUM OF 3 PER PHASE) CONTROLLED BY A SINGLE BASE UNIT AT/IN THE TRAFFIC CONTROL CABINET.
2. SYSTEM MUST BE ABLE TO PROVIDE THE FOLLOWING AUDIBLE FEATURES:
   - A LOCATING TONE
   - 5 WALK SOUND CHOICES (FIELD SELECTABLE)
   - 3 PED–CLEARANCE SOUND CHOICES (FIELD SELECTABLE)
   - DIRECTION OF TRAVEL (AS STANDARD FEATURE WITH EXTENDED PUSH)
   - INFORMATION MESSAGE (CUSTOM FEATURE WITH EXTENDED PUSH)
3. ALL AUDIBLE SOUNDS MUST EMANATE FROM PUSH BUTTON STATION.
4. EACH AUDIBLE FEATURE MUST HAVE INDEPENDENTLY SETTABLE MINIMUM AND MAXIMUM VOLUME LIMITS.
5. ALL SOUNDS MUST AUTOMATICALLY ADJUST TO AMBIENT NOISE LEVELS OVER A 60 dB RANGE.
6. ALL SOUNDS FOR ALL PUSH BUTTON STATIONS MUST BE SYNCHRONIZED.
7. SYSTEM MUST BE ABLE TO PROVIDE AUDIBLE COUNTDOWN DURING PED CLEARANCE PHASE.
8. PUSH BUTTON STATIONS MUST REQUIRE ONLY TWO WIRES COMING FROM THE TRAFFIC CONTROL CABINET FOR EACH PHASE / CROSSWALK.
9. EACH PUSH BUTTON STATION MUST HAVE A 2" BUTTON WITH A TACTILE RAISED DIRECTIONAL ARROW ON THE BUTTON.
10. THE ARROW MUST BE ABLE TO BE CHANGED TO ONE OF FOUR DIRECTIONS.
11. THE ARROW/BUTTON MUST VIBRATE DURING THE WALK PERIOD, FOLLOWING A BUTTON PUSH.
12. PUSH BUTTON STATION FRAME SHALL BE MADE OF CAST ALUMINUM WITH MOUNTING HOLES TO HOLD A 9"x12" OR LARGER PEDESTRIAN SIGN.
13. ALL VOLUMES AND OPTIONAL FEATURES ARE TO BE SETTABLE USING A HAND HELD WIRELESS DEVICE WITH PASSWORD SECURITY.
14. WIRELESS DEVICE SHALL BE CAPABLE OF SETTING/UPDATING ALL PUSH BUTTON STATIONS ON THE INTERSECTION FROM A SINGLE PUSH BUTTON STATION (GLOBAL UPDATING).
15. SYSTEM MUST BE ABLE TO MUTE SOUNDS ON ALL CROSSWALKS EXCEPT ACTIVATED CROSSWALK (SELECTABLE FEATURE).
16. SYSTEM MUST BE ABLE TO HAVE MULTIPLE LANGUAGE CAPABILITY, SELECTABLE USER.
17. SYSTEM SHALL BE ABLE TO PLAY EMERGENCY PREEMPTION MESSAGE.
18. SYSTEM SHALL BE ABLE TO SELF TEST BUTTONS AND REPORT ANY FAULTS TO TRAFFIC CONTROLLER.
19. PEDESTRIAN BUTTON CASTING(S) SHALL BE YELLOW.

REV NO.	DATE	BY	APPR
1	2/07	RAW	AGE
2	8/08	RAW	AGE
3	7/14	RAW	CJC
4	1/15	RAW	CJC
5	2/21	OIS	CJC
6	9/21	RAW	CJC

PUBLIC WORKS – STREETS AND TRANSPORTATION

APPROVED BY: TRAFFIC ENGINEER MANAGER

APPROVED DATE: 9/1/2021

CITY OF Vancouver WASHINGTON

ADA PEDESTRIAN AUDIBLE PUSH BUTTON ASSEMBLY

STANDARD PLAN NUMBER T20–09B

I:\CITYAPPS\AUTOCAD\STD_DETAILS\DRAWING_FILES\T20–09B

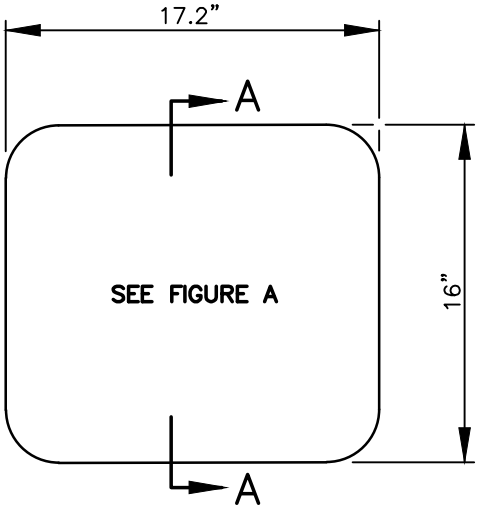

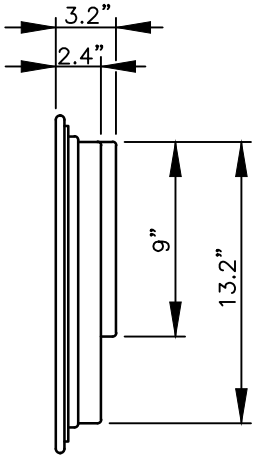

SECTION A–A

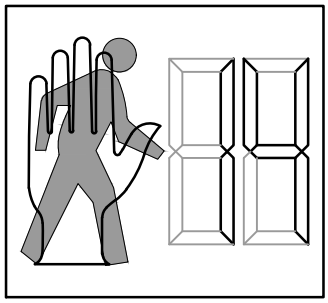

FIGURE A

16"x18" LED ARRAY PEDESTRIAN COUNTDOWN SIGNAL

(APPROVED MATERIAL: GE PART NO. PS7–CFC1–01A–18 OR APPROVED EQUAL)

REV NO.	DATE	BY	APPR
1	7/14	RAW	CJC
2	7/19	RAW	CJC
3	9/21	RAW	CJC

PUBLIC WORKS – STREETS AND TRANSPORTATION

APPROVED BY: TRAFFIC ENGINEER MANAGER

APPROVED DATE: 9/1/2021

CITY OF Vancouver WASHINGTON

PEDESTRIAN COUNTDOWN SIGNAL HEAD OPTIONS

STANDARD PLAN NUMBER

T20–09D

I:\CITYAPPS\AUTOCAD\STD_DETAILS\DRAWING_FILES\T20–09D

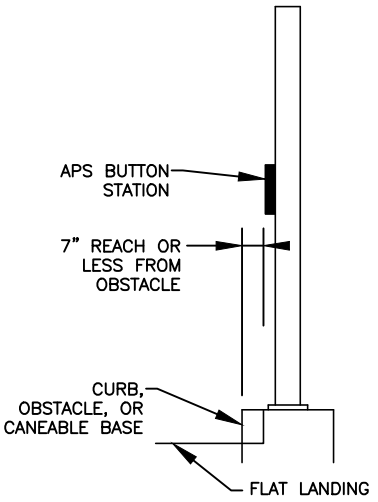

CASE 1: NO EXTENSION ARM REQUIRED WHEN REACH DISTANCE TO BUTTON 7" OR LESS.

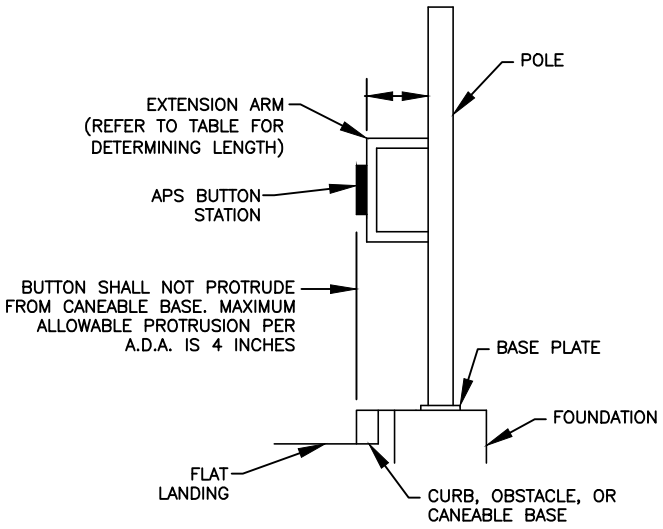

CASE 2: EXTENSION ARM REQUIRED WHEN REACH DISTANCE TO BUTTON IS 8" OR GREATER. SEE TABLE.

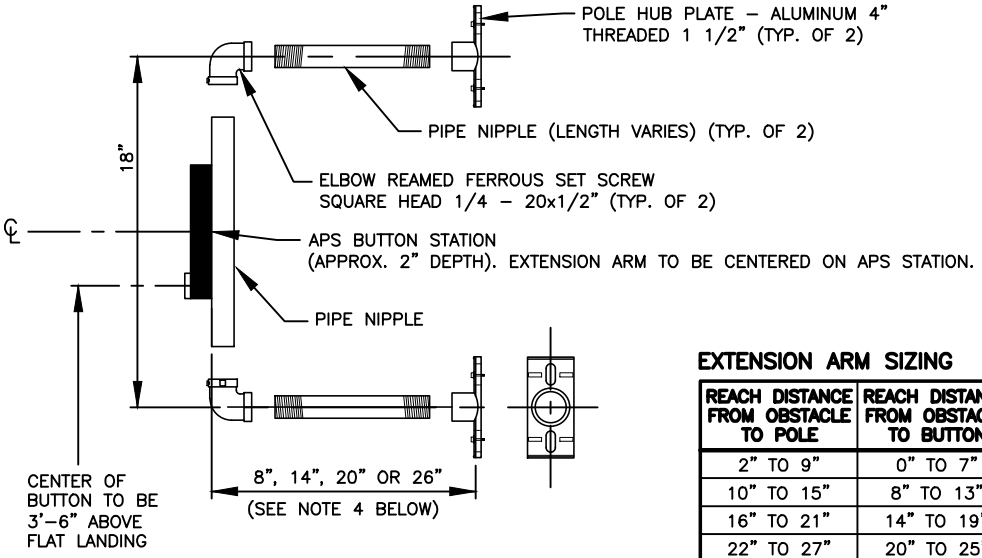

PUSH BUTTON EXTENSION

EXTENSION ARM SIZING

REACH DISTANCE FROM OBSTACLE TO POLE	REACH DISTANCE FROM OBSTACLE TO BUTTON	EXTENSION ARM LENGTH	RESULTING MAXIMUM REACH
2" TO 9"	0" TO 7"	NONE	7"
10" TO 15"	8" TO 13"	8"	5"
16" TO 21"	14" TO 19"	14"	5"
22" TO 27"	20" TO 25"	20"	5"
28" TO 33"	26" TO 31"	26"	5"

NOTES:

1. IT IS CONTRACTOR RESPONSIBILITY TO INSTALL THE APPROPRIATE EXTENSION ARM LENGTH. EXTENSION ARM LENGTH WILL VARY BASED ON FIELD CONDITIONS RELATED TO POLE, FOUNDATION, CURB LOCATION, AND LANDING GEOMETRY.
2. MAX. REACH DISTANCE FROM OBSTACLE TO BUTTON SHOULD BE 7" OR LESS.
3. BUTTON SHALL NOT PROTRUDE FROM CANEABLE BASE. (MAX. ALLOWABLE PROTRUSION PER A.D.A. IS 4".)
4. ALL HARDWARE SHALL BE STAINLESS STEEL.
5. EXTENSION ARM MANUFACTURED BY ADVANCED TRAFFIC PRODUCTS, INC. OR APPROVED EQUAL.
6. PAINT COLOR TO BE YELLOW.

REV NO.	DATE	BY	APPR
1	3/17	RAW	CJC
2	2/21	RAW	CJC
3	9/21	RAW	CJC

PUBLIC WORKS – STREETS AND TRANSPORTATION

APPROVED BY: TRAFFIC ENGINEER MANAGER

APPROVED DATE: 9/1/2021

CITY OF Vancouver WASHINGTON

PEDESTRIAN PUSHBUTTON MOUNTING EXTENSION

STANDARD PLAN NUMBER

T20–09E

I:\CITYAPPS\AUTOCAD\STD_DETAILS\DRAWING_FILES\T20–09E

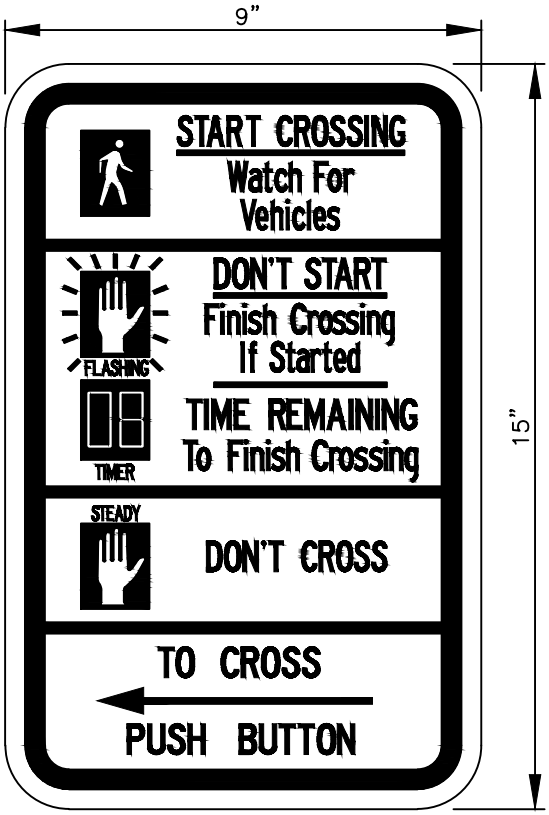

STANDARD EDUCATIONAL PLAQUE

(MUTCD R10–3e FOR USE WITH COUNTDOWN PEDESTRIAN SIGNALS)

SPANISH

RUSSIAN

OPTIONAL LANGUAGE STANDARD PLAQUES*

*OTHER LANGUAGES AVAILABLE.

REV NO.	DATE	BY	APPR
1	2/07	RAW	AGE
2	8/08	RAW	AGE
3	1/15	RAW	CJC
4	7/19	RAW	CJC
5	2/21	OIS	CJC
6	9/21	RAW	CJC

PUBLIC WORKS – STREETS AND TRANSPORTATION

APPROVED BY: TRAFFIC ENGINEER MANAGER

APPROVED DATE: 9/1/2021

CITY OF Vancouver WASHINGTON

PUSH BUTTON PLAQUE OPTIONS

STANDARD PLAN NUMBER T20–10A

I:\CITYAPPS\AUTOCAD\STD_DETAILS\DRAWING_FILES\T20–10A

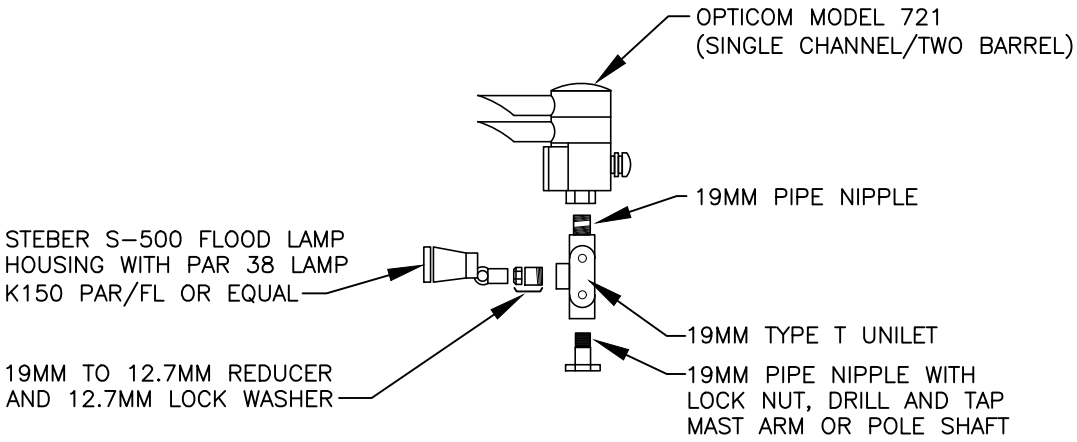

MAST ARM MOUNT

REV NO.	DATE	BY	APPR
1	1/15	RAW	CJC
2	4/18	RAW	CJC
3	7/19	RAW	CJC
4	2/21	OIS	CJC
5	9/21	RAW	CJC

PUBLIC WORKS – STREETS AND TRANSPORTATION

APPROVED BY: TRAFFIC ENGINEER MANAGER

APPROVED DATE: 9/1/2021

CITY OF Vancouver WASHINGTON

COMBINATION PREEMPTION DETECTOR/INDICATOR MOUNTING DETAIL

STANDARD PLAN NUMBER

T20–11A

I:\CITYAPPS\AUTOCAD\STD_DETAILS\DRAWING_FILES\T20–11A

1. INTERSECTION RADIO/GPS UNIT (MODEL 3100)
2. CABLE RETAINER
3. RADIO/GPS CABLE (MODEL 1070)
4. NIPPLE/PIPE
5. LOCKNUT (2)
6. 3/4 INCH NPT MOUNT
7. WIRING COVER
8. COVER SCREWS (2)

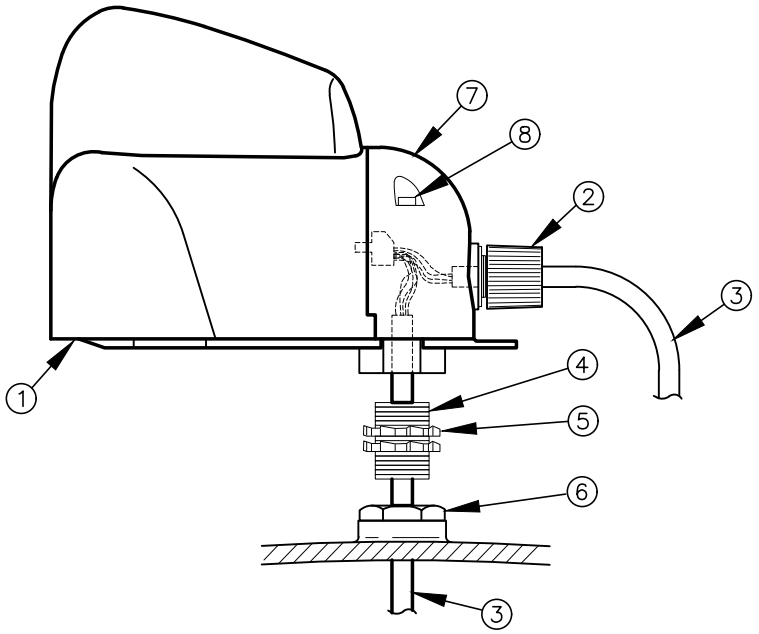

NOTE:

1. THE RADIO/GPS UNIT SHALL BE MOUNTED IN A LOCATION THAT HAS AN UNOBSTRUCTED VIEW OF ALL APPROACHES OUT TO A DISTANCE OF 2,500 FEET.
2. BLOCKAGE OF APPROACHES BY THINGS SUCH AS BRIDGES, BUILDINGS, WALKWAYS AND TREES SHOULD BE AVOIDED.
3. THE RADIO/GPS UNIT IS USUALLY MOUNTED TO THE MAST ARM OR SPAN WIRE POLE NEAREST THE TRAFFIC CONTROLLER CABINET. IF AN APPROPRIATE MOUNTING LOCATION ON A MAST ARM OR SPAN WIRE POLE IS NOT AVAILABLE, YOU CAN MOUNT THE UNIT ON TO A SPAN WIRE. TRY TO USE A SIGNAL HEAD OR SIGN MOUNT TO MINIMIZE SWAY.
4. THE RADIO/GPS UNIT SHALL BE MOUNTED LEVEL AND AS HIGH AS POSSIBLE. DO NOT MOUNT UNIT UPSIDE DOWN.
5. THE RADIO/GPS UNIT SHALL HAVE UNOBSTRUCTED VIEW OF AT LEAST 50% OF THE SKY.
6. THE MOUNTING LOCATION SHALL BE SUCH THAT THE CABLE RUN FROM THE RADIO/GPS UNIT TO THE PHASE SELECTOR (LOCATED IN THE TRAFFIC CONTROLLER CABINET) IS NO MORE THAN 250 FEET.
7. THE RADIO/GPS CABLE MAY BE RUN THROUGH CONDUIT OR ATTACHED TO A MESSENGER WIRE. THE CABLE SHALL NOT BE SUSPENDED UNSUPPORTED.
8. THE RADIO/GPS UNIT SHALL BE ORIENTED SUCH THAT THE CABLE RETAINER IS FACING AN AREA FROM WHICH VEHICLES WILL NOT BE APPROACHING.
9. DRIP LOOP SHALL BE 6 TO 8 INCHES.
10. ALL HARDWARE FASTENERS SHALL BE STAINLESS STEEL, TORQUED TO MANUFACTURER'S RECOMMENDATIONS WITH LOCKNUTS.
11. POWER LEADS SHALL BE INSTALLED WITH SUITABLE COPPER OPEN SPADES.
12. CONTRACTOR SHALL UTILIZE TOOLS AS RECOMMENDED BY RADIO/GPS VENDOR.
13. ALL FASTENER PENETRATIONS OF CABINET SHALL BE SEALED WITH APPROVED METHOD.

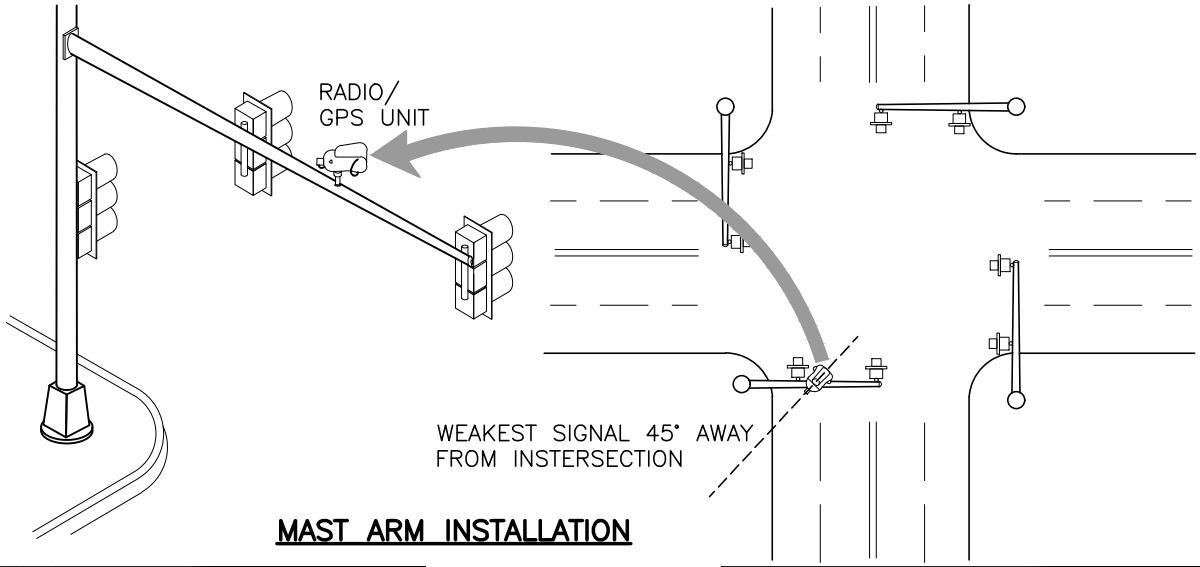

MAST ARM INSTALLATION

REV NO.	DATE	BY	APPR
1	1/15	RAW	CJC
2	7/19	RAW	CJC
3	9/21	RAW	CJC

PUBLIC WORKS – STREETS AND TRANSPORTATION

APPROVED BY: TRAFFIC ENGINEER MANAGER

APPROVED DATE: 9/1/2021

CITY OF Vancouver WASHINGTON

GPS OPTICOM INSTALLATION

STANDARD PLAN NUMBER

T20–11B

I:\CITYAPPS\AUTOCAD\STD_DETAILS\DRAWING_FILES\T20-11B

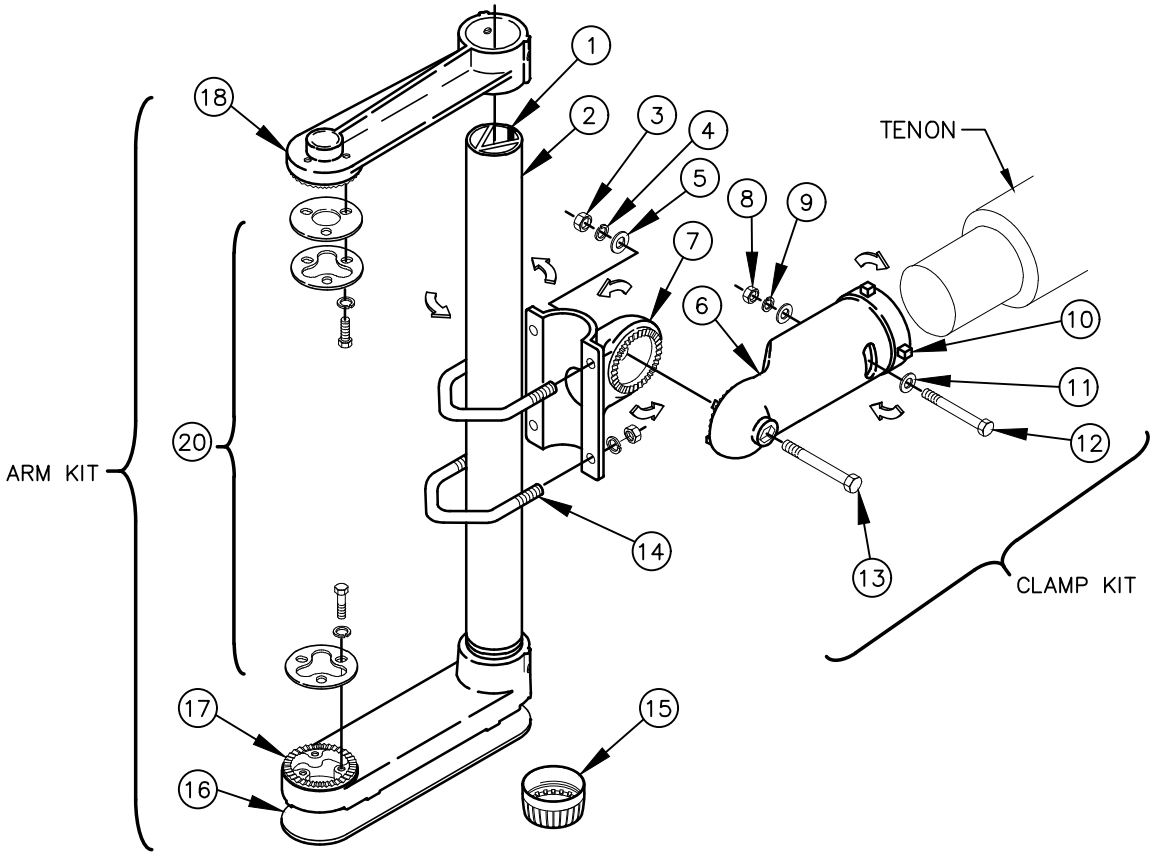

ITEM	DESCRIPTION	QTY
1	INSERT, VINYL	1
2	GUSSETED TUBE, 1 1/2"–11 1/2 NPS, TOE, ALUMINUM	1
3	NUT, HEX 1/2"–13, STAINLESS	1
4	WASHER, LOCK SPLIT 1/2", STAINLESS	1
5	WASHER, FLAT 1/2", STAINLESS	1
6	ARM, ARTICULATED SERRATED 2–3/8" OD TENON MOUNT, ALUMINUM	1
7	SADDLE, ARTICULATING SERRATED, 713 ALUMINUM	1
8	NUT, HEX 3/8"–16, STAINLESS	1
9	WASHER, LOCK SPLIT 3/8", STAINLESS	1
10	SCREW, SET HEX HD 3/8"–16x3/4", STAINLESS	3
11	WASHER, FLAT 3/8", STAINLESS	2
12	BOLT, HEX HD 3/8"–16x4"	1
13	BOLT, HEX HD 1/2"–13x4 1/2", STAINLESS	1
14	V–BOLT KIT, 5/16"–18, STAINLESS	1
15	THREAD PROTECTOR, PLASTIC	1
16	COVER, LOWER ARM, ABS PLASTIC	1
17	LOWER ARM, ASTRO–BRAC 1–WAY, 8 1/2"	1
18	UPPER ARM, ASTRO–BRAC 1–WAY, 8 1/2"	1
19	BAG, 0.004x6 1/2"x14", POLY W/"AB–4000 ARM KIT"	2
20	HARDWARE KIT, 1–WAY ARM KIT W/ZINC 2 WASHER AND SS HDWR	2

REV NO.	DATE	BY	APPR
1	8/04	RAW	AGE
2	3/06	RAW	AGE
3	2/07	RAW	AGE
4	8/08	RAW	AGE
5	7/14	RAW	CJC
6	9/21	RAW	CJC

PUBLIC WORKS – STREETS AND TRANSPORTATION

APPROVED BY: TRAFFIC ENGINEER MANAGER

APPROVED DATE: 9/1/2021

CITY OF Vancouver WASHINGTON

MOUNTING BRACKET ASSEMBLY WITH TENON CLAMP

STANDARD PLAN NUMBER

T20–12

I:\CITYAPPS\AUTOCAD\STD_DETAILS\DRAWING_FILES\T20–12

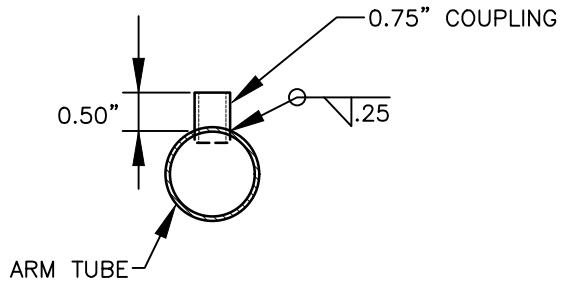

COUPLING DETAIL

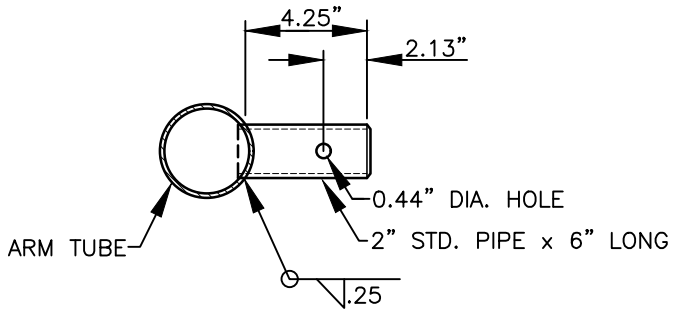

TENON DETAIL

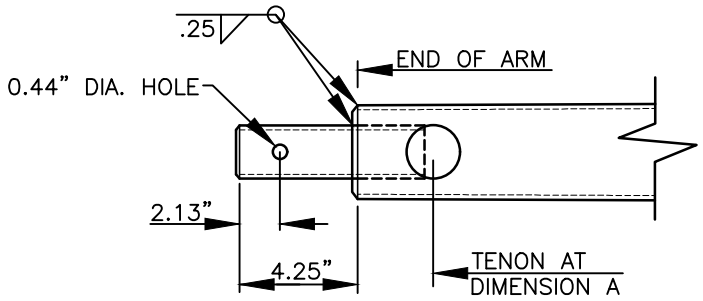

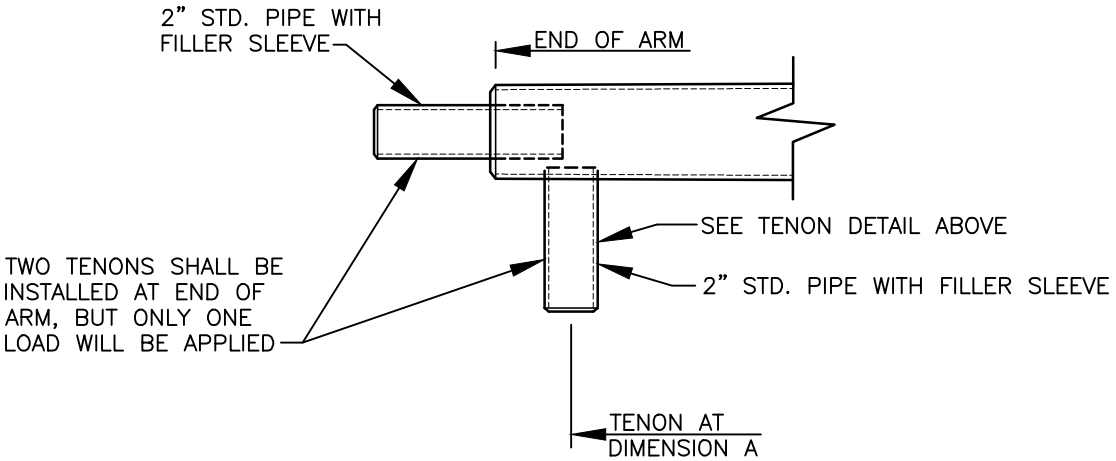

NOTE:
ALL UNUSED TENONS SHALL BE COVERED WITH UV RESISTANT CAPS.

END OF ARM TENONS DETAIL

REV NO.	DATE	BY	APPR
1	3/06	RAW	AGE
2	2/07	RAW	AGE
3	8/08	RAW	AGE
4	1/15	RAW	AGE
5	7/19	RAW	CJC
6	9/21	RAW	CJC

PUBLIC WORKS – STREETS AND TRANSPORTATION

APPROVED BY: TRAFFIC ENGINEER MANAGER

APPROVED DATE: 9/1/2021

CITY OF Vancouver WASHINGTON

END OF ARM TENON AND COUPLING CONNECTION

STANDARD PLAN NUMBER

T20–13

I:\CITYAPPS\AUTOCAD\STD_DETAILS\DRAWING_FILES\T20-13

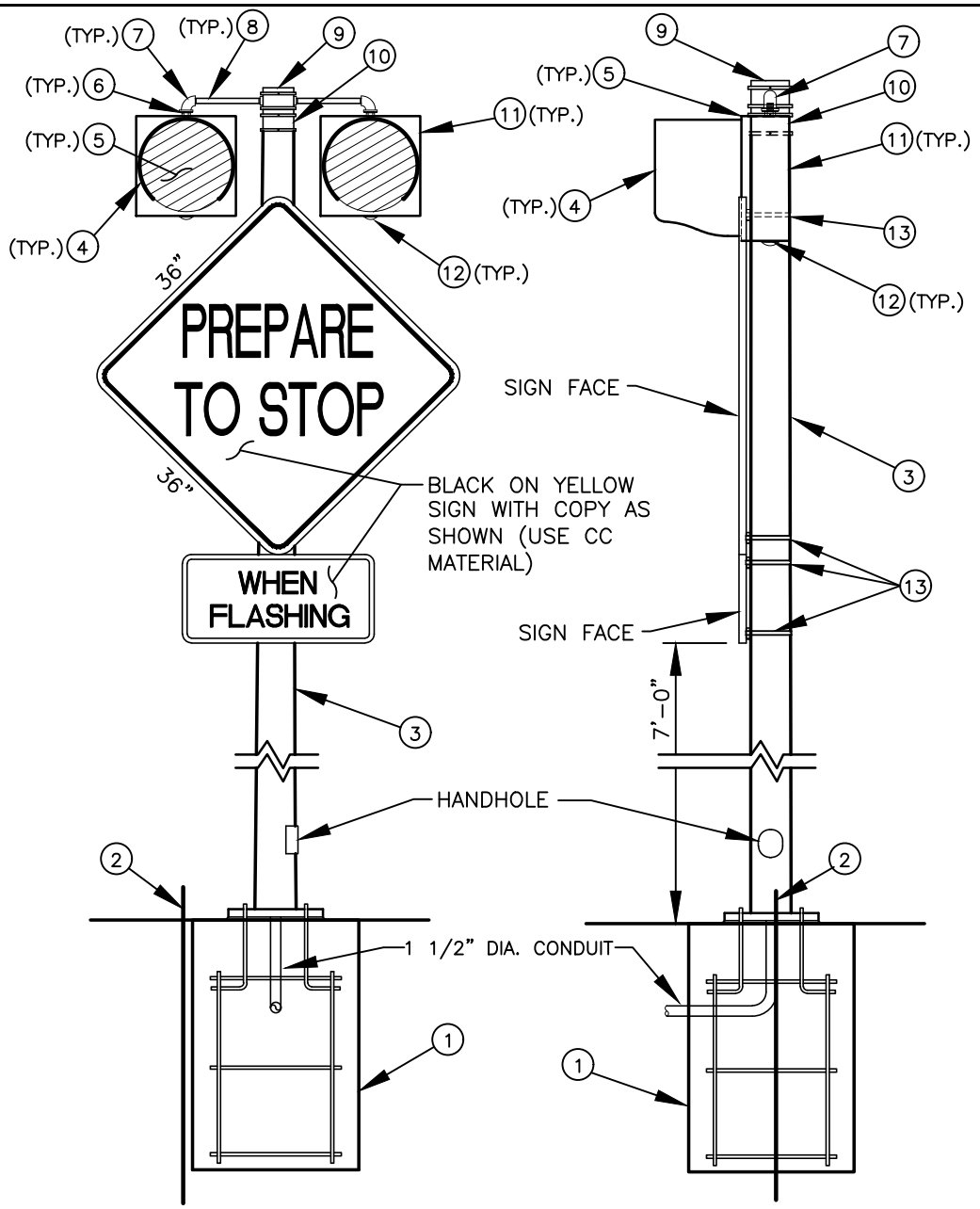

NOTES:

1. SEE **TYPE PS, TYPE I AND TYPE PPB TRAFFIC SIGNAL POLE FOUNDATION DETAIL T20-16** AND SPECIFICATIONS FOR FOUNDATION INFORMATION.
2. 8' GROUND ROD – CONNECT TO BASE.
3. CITY OF VANCOUVER TYPE I STANDARD (12'-6" IN LENGTH) OR EXISTING LIGHT STANDARD.
4. 1-WAY, 1-SECTION, 12" YELLOW LED MOUNTED ABOVE SIGN..
5. TUNNEL VISOR.
6. LOCKNIPPLE, 1 1/2" DIA. WITH GASKET, WASHER AND CONDUIT LOCKNUT.
7. SERRATED OR FLANGED ELBOW.
8. CONDUIT NIPPLE, 1 1/2" DIA.
9. TOP MOUNT SEE WSDOT DETAIL J-21.16.xx AND J-21.17.xx. IF SIGN IS MOUNTED ON LIGHT POLE USE MODIFIED TYPE K MOUNT.
10. SLIPFITTER.
11. ALUMINUM CASING.
12. END CAP.
13. MOUNTING BRACKET.

REFERENCES TO WSDOT STANDARD PLANS, USE THE MOST CURRENT VERSION OF THESE STANDARD PLANS.

REV NO.	DATE	BY	APPR
1	8/04	RAW	AGE
2	3/06	RAW	AGE
3	2/07	RAW	AGE
4	8/08	RAW	AGE
5	7/14	RAW	CJC
6	9/21	RAW	CJC

PUBLIC WORKS – STREETS AND TRANSPORTATION

APPROVED BY: TRAFFIC ENGINEER MANAGER

APPROVED DATE: 9/1/2021

CITY OF Vancouver WASHINGTON

SIGN AND FLASHER ASSEMBLY

STANDARD PLAN NUMBER T20-14

I:\CITYAPPS\AUTOCAD\STD_DETAILS\DRAWING_FILES\T20-14

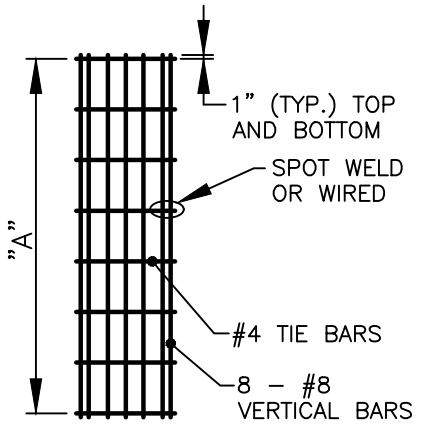

REBAR CAGE DETAIL

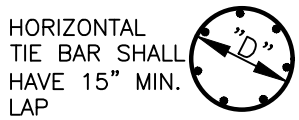

HORIZONTAL REBAR		
POLE FOUNDATION DIAMETER	REBAR CIR. "D"	SPACING
36"	30"	12" MAX. EXCEPT FOR 12'–0" AND 15'–0" BASE WHICH SHALL BE 9" MAX.
48"	40"	12" MAX. EXCEPT FOR 12'–0" AND 15'–0" BASE WHICH SHALL BE 9" MAX.

VERTICAL REBAR	
POLE FOUNDATION DEPTH	LENGTH "A"
8'–0"	7'–8"
10'–0"	9'–8"
12'–0"	11'–8"
15'–0"	14'–8"

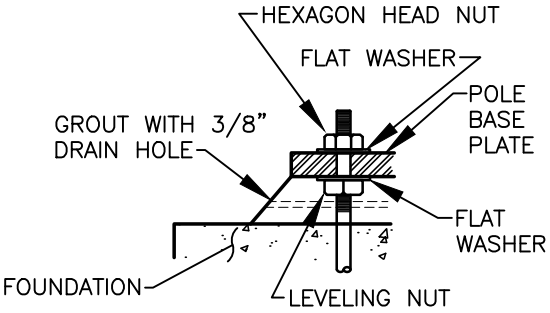

ANCHOR BOLT DETAIL

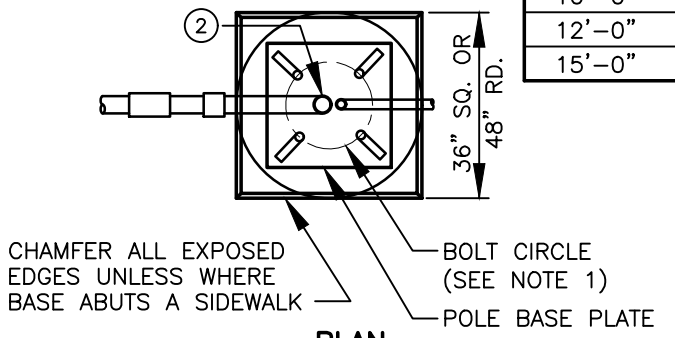

PLAN

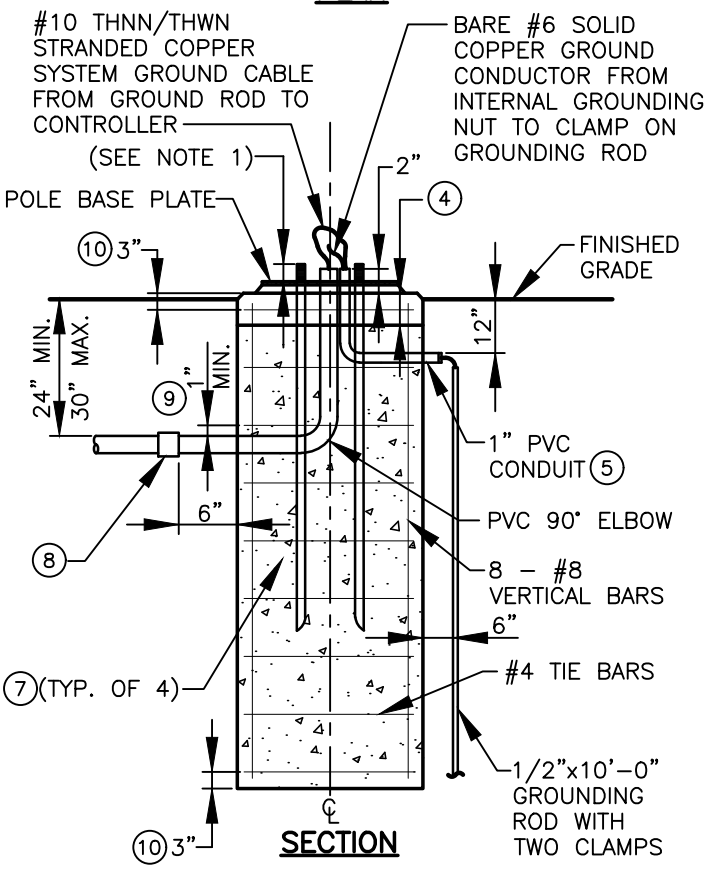

SECTION

TRAFFIC SIGNAL POLE BASE

POLE BASE NOTES:

1. FINAL POLE ANCHOR, BOLT SIZE, ANCHOR BOLT FOUNDATION, AND BOLT CIRCLE SHALL BE AS PER MANUFACTURER'S RECOMMENDED PRACTICES.
2. ALL CONDUITS AND ANCHOR BOLTS SHALL BE RIGIDLY INSTALLED BEFORE CONCRETE IS PLACED. ANCHORS SHALL BE SPACED BY MEANS OF A FACTORY CERTIFIED TEMPLATE OR DRAWING. THE CENTER OF WHICH SHALL COINCIDE WITH THE CENTER OF THE BASE.
3. ALL CONCRETE POLE BASES SHALL BE CONSOLIDATED BY AN INTERNAL TYPE VIBRATOR.
4. FINAL 6" OF CONCRETE FOUNDATION (POLE CAP) SHALL BE FORMED SQUARE. FINAL TOP ELEVATION SHALL MATCH SIDEWALK.
5. PVC CONDUIT ELBOWS IN CONCRETE FOUNDATIONS SHALL BE CONNECTED TO PVC CONDUIT WITH PVC PIPE NIPPLE ALL PVC CONDUIT AND ELBOWS PRIOR TO PVC PIPE NIPPLE SHALL BE CONSIDERED SUBSIDIARY TO THE TRAFFIC SIGNAL POLE BASE.
6. POLE BASE PLATE THICKNESS VARIES PER SIGNAL POLE SIZE.
7. ANCHOR BOLTS AND PLATE PER POLE MANUFACTURER. ANCHOR BOLT SHALL BE ACCURATELY LOCATED AND SECURED IN PLACE PRIOR TO POURING CONCRETE.
8. PVC COUPLING SHALL BE 4" MINIMUM OF THE 6" OUTSIDE FOUNDATION.
9. CONDUIT SHALL HAVE MINIMUM 1" CLEARANCE FROM REBAR AND ANCHOR BOLTS.
10. REBAR SHALL HAVE MINIMUM 3" COVER.
11. SEE WSDOT STANDARD PLAN J–26.10–XX FOR ADDITIONAL INFORMATION.

REFERENCES TO WSDOT STANDARD PLANS, USE THE MOST CURRENT VERSION OF THESE STANDARD PLANS.

REV NO.	DATE	BY	APPR
1	8/08	RAW	AGE
2	7/14	RAW	CJC
3	4/18	RAW	CJC
4	7/19	RAW	CJC
5	9/21	RAW	CJC

PUBLIC WORKS – STREETS AND TRANSPORTATION

APPROVED BY: TRAFFIC ENGINEER MANAGER

APPROVED DATE: 9/1/2021

CITY OF Vancouver WASHINGTON

TYPE II, TYPE III, TYPE B AND TYPE S TRAFFIC SIGNAL POLE FOUNDATION DETAIL

STANDARD PLAN NUMBER T20–15

I:\CITYAPPS\AUTOCAD\STD_DETAILS\DRAWING_FILES\T20-15

FOR TYPE 1 AND PS:
- 4 – 3/4" DIA. x 30" FULL THREAD ANCHOR BOLTS,
- 4 – 3/4" DIA. HEAVY HEX NUTS,
- 4 – FLAT WASHERS

FOR TYPE PPB:
- 4 – 1/2" DIA. x 18" FULL THREAD ANCHOR BOLTS,
- 4 – 1/2" DIA. HEAVY HEX NUTS,
- 4 – FLAT WASHERS

ANCHOR BOLTS SHALL BE ACCURATELY LOCATED AND SECURED IN PLACE PRIOR TO POURING CONCRETE

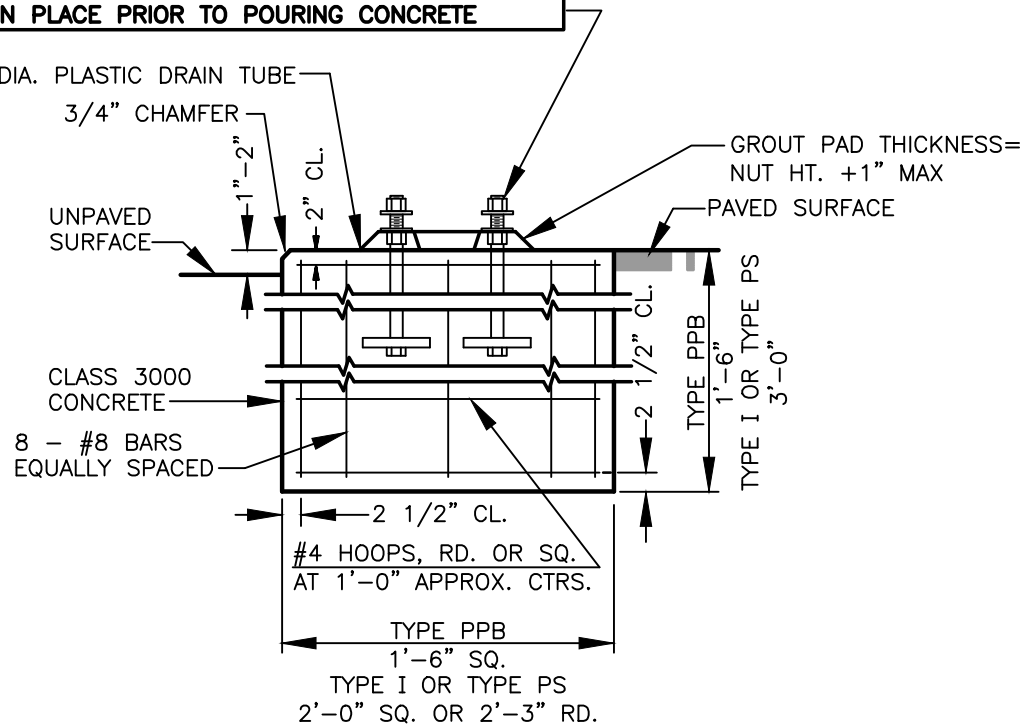

NOTES:

ALL FOUNDATION HARDWARE MATERIALS SHALL CONFORM WITH WSDOT STANDARD SPECIFICATIONS SECTION 9–29.6(5).

FOR ADDITIONAL INFORMATION SEE WSDOT STANDARD PLANS J–20.10–xx FOR TYPE PPB FOUNDATION. SEE WSDOT STANDARD PLANS J–21.10–xx FOR TYPE I AND TYPE PPB.

REFERENCES TO WSDOT STANDARD PLANS AND SPECIFICATIONS, USE THE MOST CURRENT VERSION OF THESE STANDARD PLANS.

REV NO.	DATE	BY	APPR
1	8/08	RAW	AGE
2	7/14	RAW	CJC
3	3/16	RAW	CJC
4	4/18	RAW	CJC
5	9/21	RAW	CJC

PUBLIC WORKS – STREETS AND TRANSPORTATION

APPROVED BY: TRAFFIC ENGINEER MANAGER

APPROVED DATE: 9/1/2021

CITY OF Vancouver WASHINGTON

TYPE PPB, TYPE PS AND TYPE I TRAFFIC SIGNAL POLE FOUNDATION

STANDARD PLAN NUMBER

T20–16

I:\CITYAPPS\AUTOCAD\STD_DETAILS\DRAWING_FILES\T20–16

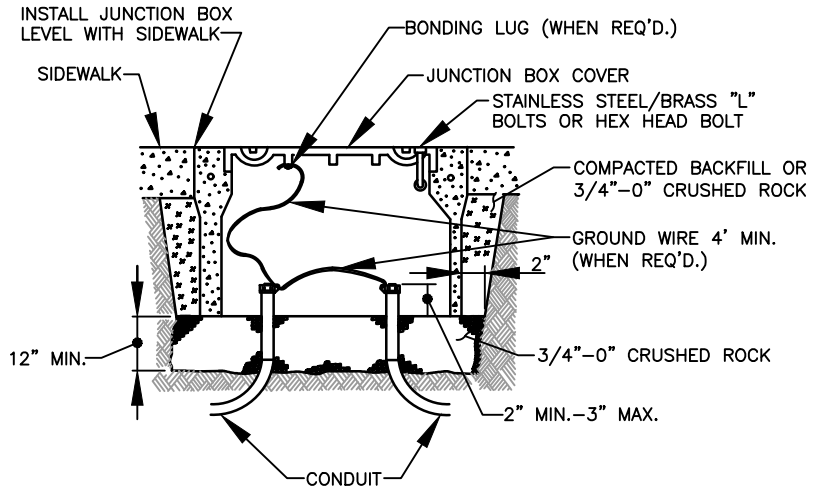

INSTALLATION IN SIDEWALK OR AT BACK OF CURB

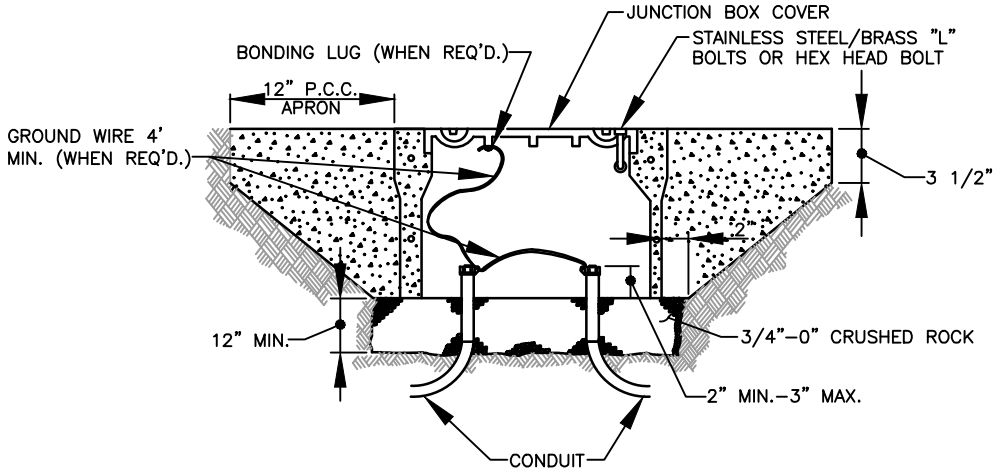

INSTALLATION WITH PORTLAND CEMENT CONCRETE APRON

(FOR INCIDENTAL TRAVEL AREAS ONLY; GRAVEL SHOULDERS, BEHIND GUARDRAIL, ETC.)

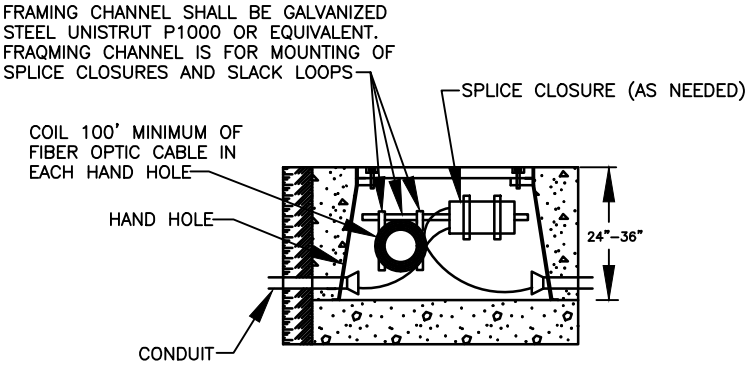

INSTALLATION OF HAND HOLE

TYPE	L	W	D	TYPE	L	W	D
JB1	17"	10"	12"	HH–1	24"	30"	24"
JB2	22"	12"	12"	HH–2	30"	48"	24"
JB3	30"	17"	12"	HH–3	30"	48"	36"

JUNCTION BOX/HAND HOLE DIMENSION TABLE

NOTES:

USE STAINLESS STEEL/BRASS BOLTS OR HEX HEAD BOLTS TO SECURE LID.

ALL CONCRETE TO HAVE A FINISHED PROFESSIONAL APPEARANCE IN ACCORDANCE WITH WSDOT SPECIFICATION 8–14 CEMENT CONCRETE SIDEWALKS.

REV NO.	DATE	BY	APPR
1	2/21	OIS	CJC
2	9/21	RAW	CJC

PUBLIC WORKS – STREETS AND TRANSPORTATION

APPROVED BY: TRAFFIC ENGINEER MANAGER

APPROVED DATE: 9/1/2021

CITY OF Vancouver WASHINGTON

JUNCTION BOX AND HAND HOLE BOX

STANDARD PLAN NUMBER T20–17A

I:\CITYAPPS\AUTOCAD\STD_DETAILS\DRAWING_FILES\T20–17A

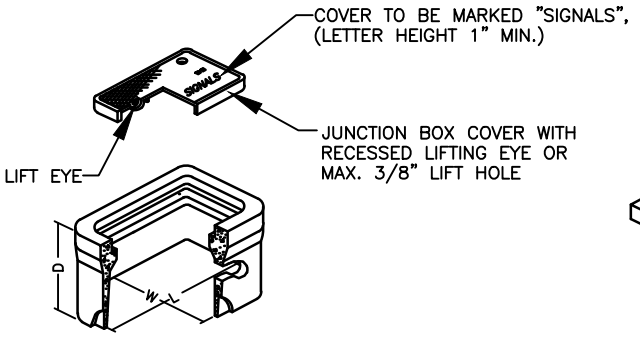

JUNCTION BOX OR PULL BOX

NOT TO BE USED IN TRAVEL LANES, SHOULDERS OR AREAS EXPOSED TO TRAFFIC. FOR LOCATION AND JUNCTION BOX DIMENSIONS (T20–17A), SEE PLANS.

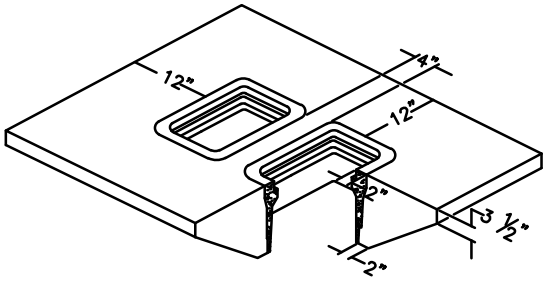

PORTLAND CEMENT CONCRETE APRON FOR TANDEM JUNCTION BOXES (NO CONDUIT BETWEEN)

(APPROX. 10FT^3 CONCRETE IN NEAT SECTION)

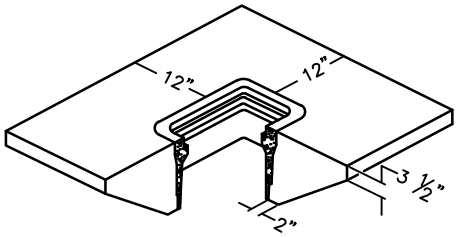

PORTLAND CEMENT CONCRETE APRON

(APPROX. 7FT^3 CONCRETE IN NEAT SECTION)

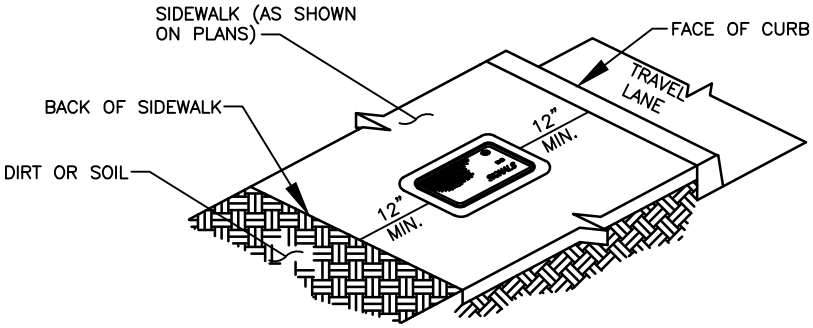

JUNCTION BOX AND PULL BOX PLACEMENT WITHIN SIDEWALKS

(JUNCTION BOXES TO BE LOCATED ONLY IN FLAT AREAS OF SIDEWALKS, CONCRETE JUNCTION BOXES ARE NOT TO BE INSTALLED IN SLOPES OF RAMPS OR DRIVEWAYS)

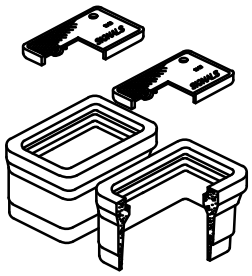

TANDEM JB/3 JUNCTION BOXES

NOT TO BE USED IN TRAVEL LANES, SHOULDERS OR AREAS EXPOSED TO TRAFFIC. FOR LOCATION, SEE PLANS.

REV NO.	DATE	BY	APPR
1	2/21	OIS	CJC
2	9/21	RAW	CJC

PUBLIC WORKS – STREETS AND TRANSPORTATION

APPROVED BY: TRAFFIC ENGINEER MANAGER

APPROVED DATE: 9/1/2021

CITY OF Vancouver WASHINGTON

JUNCTION BOX/ HAND HOLE BOX APRON

STANDARD PLAN NUMBER

T20–17B

I:\CITYAPPS\AUTOCAD\STD_DETAILS\DRAWING_FILES\T20–17B

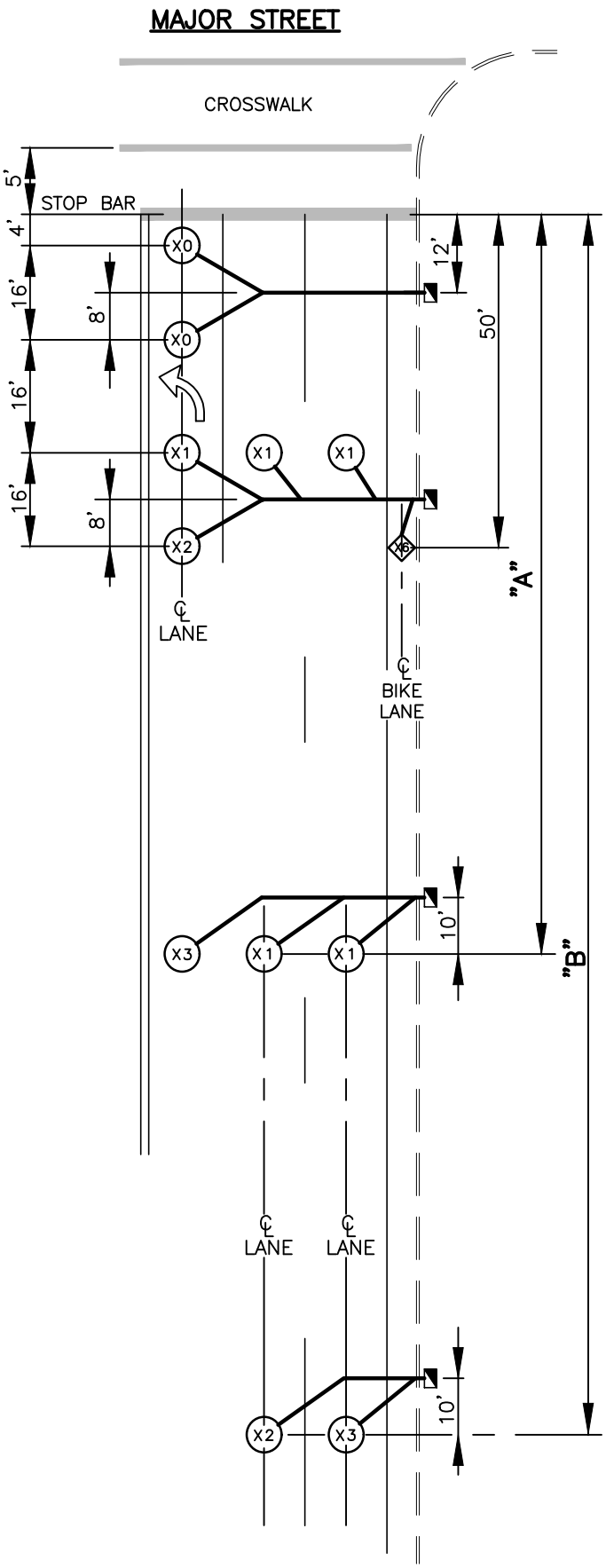

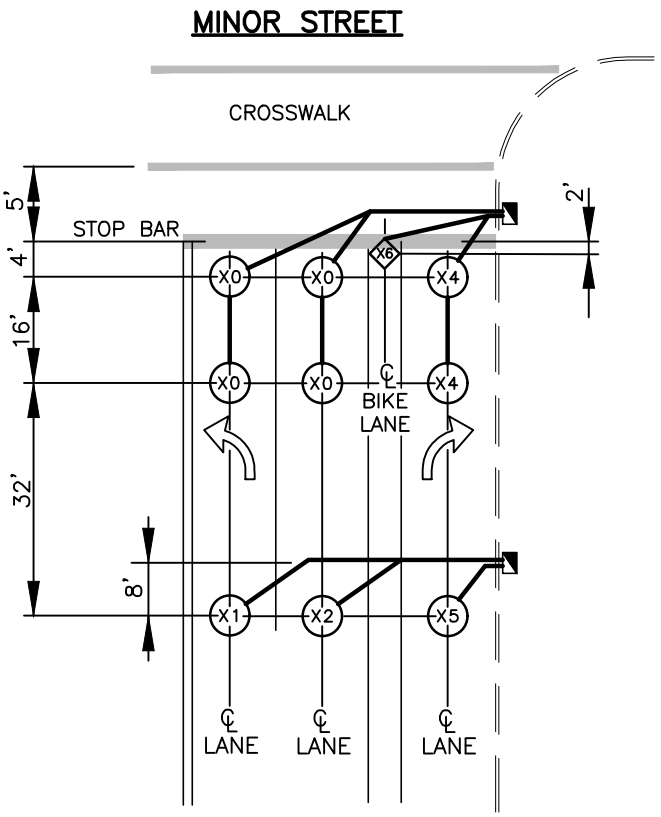

SPEED (MPH)	LOOP DETECTOR SPACING (FT.) DIMENSION	
	"A"	"B"
25	110	180
30	180	280
35	200	310
40	220	350
45	270	420
≥50	300	460

NOTES:

1. SEE LOOP INSTALLATION PLAN FOR EXACT DIMENSION AND LOCATIONS.
2. "X" REPRESENTS PHASE NUMBER.
3. NO MORE THAN 3 SAWCUTS INTO A STUB OUT. MAXIMUM 4 WIRES IN EACH SAWCUT.
4. PHASES 2 AND 5 ALWAYS EASTBOUND.
5. LEFT TURN "X3" DETECTOR ONLY NECESSARY IF LEFT TURN LANE STORAGE LENGTH MEETS THE SPACING REQUIREMENTS.

REV NO.	DATE	BY	APPR
1	3/06	RAW	AGE
2	2/07	RAW	AGE
3	8/08	RAW	AGE
4	7/14	RAW	CJC
5	4/18	RAW	CJC
6	9/21	RAW	AGE

PUBLIC WORKS – STREETS AND TRANSPORTATION

APPROVED BY: TRAFFIC ENGINEER MANAGER

APPROVED DATE: 9/1/2021

CITY OF Vancouver WASHINGTON

TYPICAL DETECTOR LAYOUT

STANDARD PLAN NUMBER

T20–30

P:\CITYAPPS\AUTOCAD\STD_DETAILS\DRAWING_FILES\T20-30

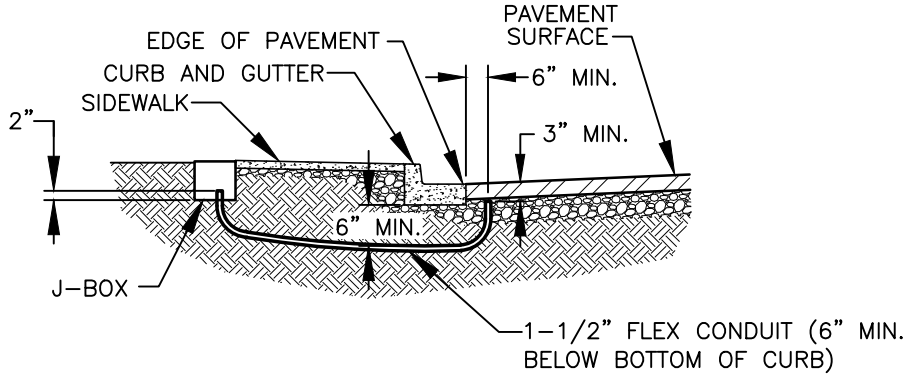

LOOP STUB-OUT DETAIL

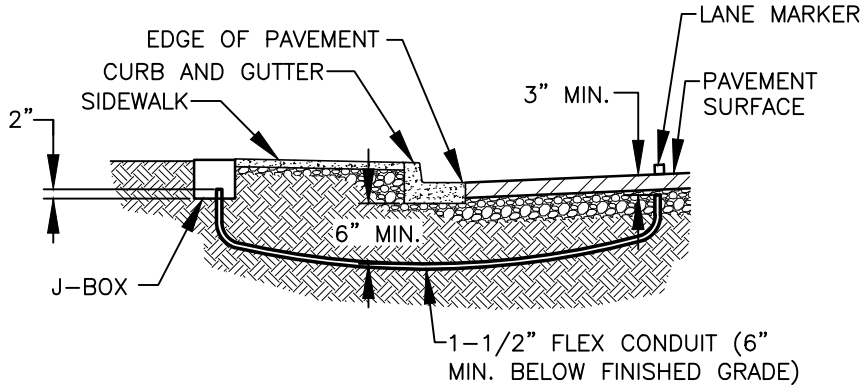

LANE LOOP STUB-OUT DETAIL

REV NO.	DATE	BY	APPR
1	8/08	RAW	AGE
2	3/06	RAW	AGE
3	2/07	RAW	AGE
4	8/08	RAW	AGE
5	1/15	RAW	CJC
6	9/21	RAW	AGE

PUBLIC WORKS – STREETS AND TRANSPORTATION

APPROVED BY: TRAFFIC ENGINEER MANAGER

APPROVED DATE: 9/1/2021

CITY OF Vancouver WASHINGTON

LOOP CONSTRUCTION DETAILS

STANDARD PLAN NUMBER

T20-31

I:\CITYAPPS\AUTOCAD\STD_DETAILS\DRAWING_FILES\T20-31

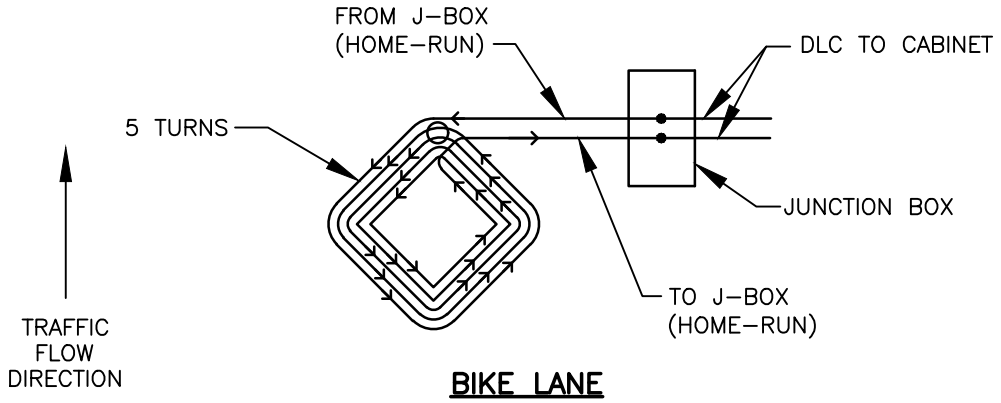

BIKE LANE

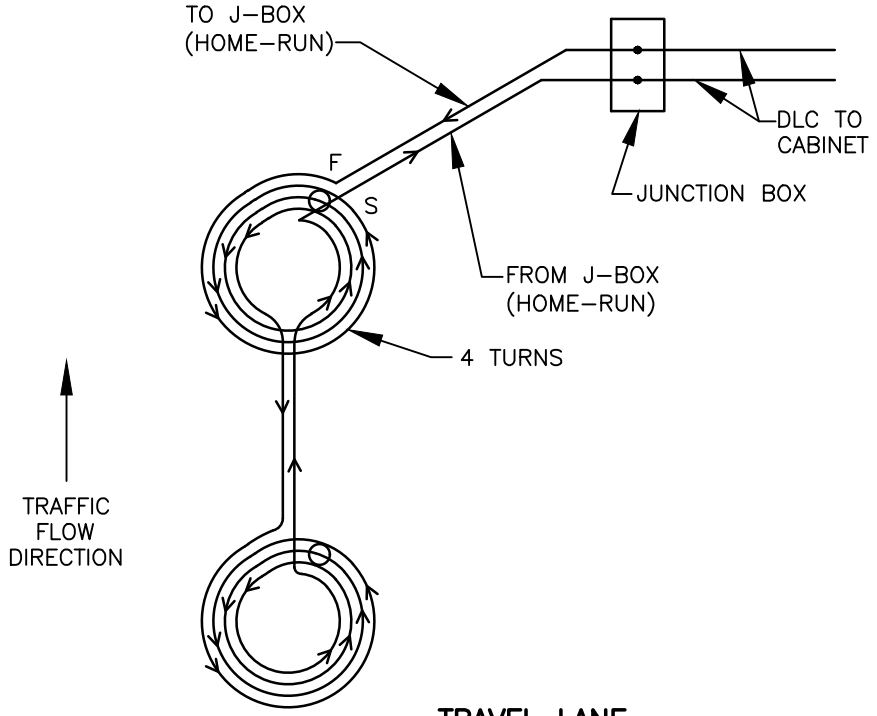

TRAVEL LANE

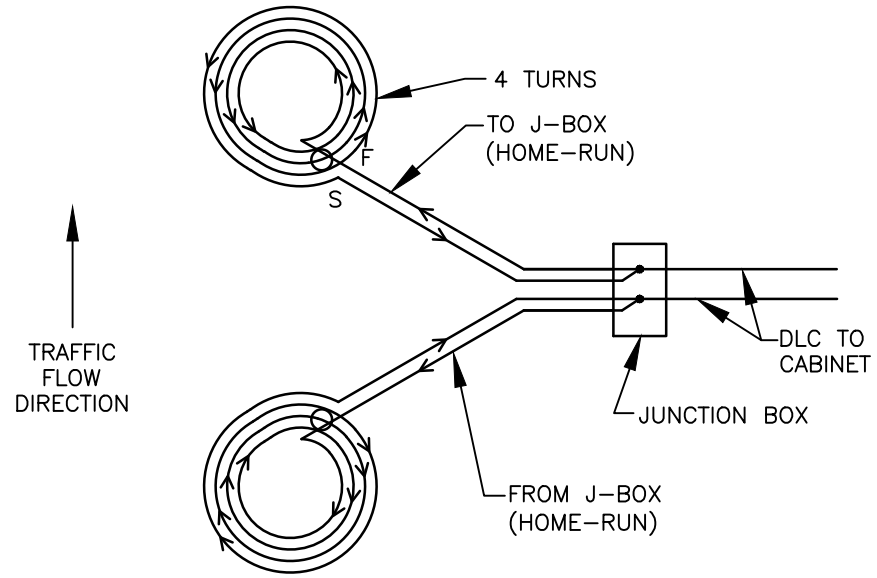

TRAVEL LANE

REV NO.	DATE	BY	APPR
1	8/04	RAW	AGE
2	3/06	RAW	AGE
3	2/07	RAW	AGE
4	8/08	RAW	AGE
5	1/15	RAW	CJC
6	9/21	RAW	CJC

PUBLIC WORKS – STREETS AND TRANSPORTATION

APPROVED BY: TRAFFIC ENGINEER MANAGER

APPROVED DATE: 9/1/2021

CITY OF Vancouver WASHINGTON

DETECTOR LOOP WINDING DETAILS

STANDARD PLAN NUMBER

T20–32

I:\CITYAPPS\AUTOCAD\STD_DETAILS\DRAWING_FILES\T20–32

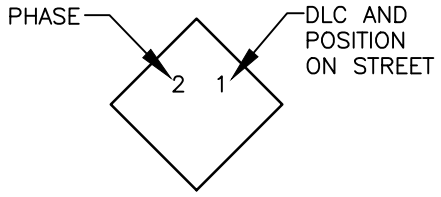

BIKE LANE

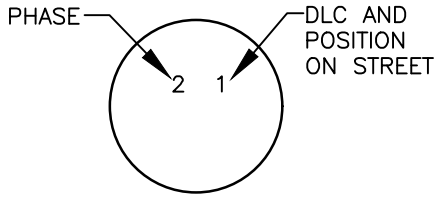

TRAVEL LANE

LOOP NUMBERING

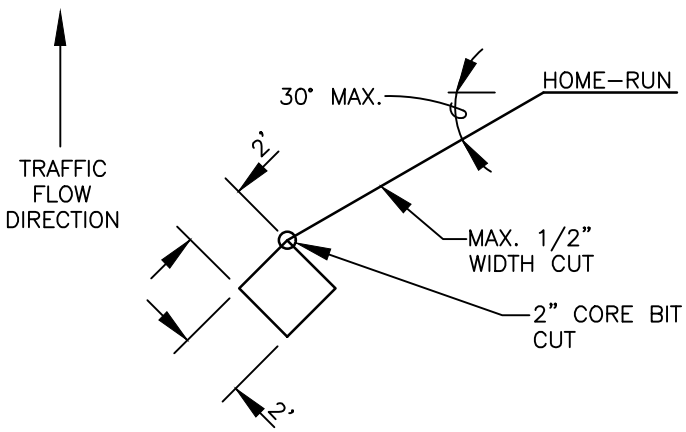

BIKE LANE

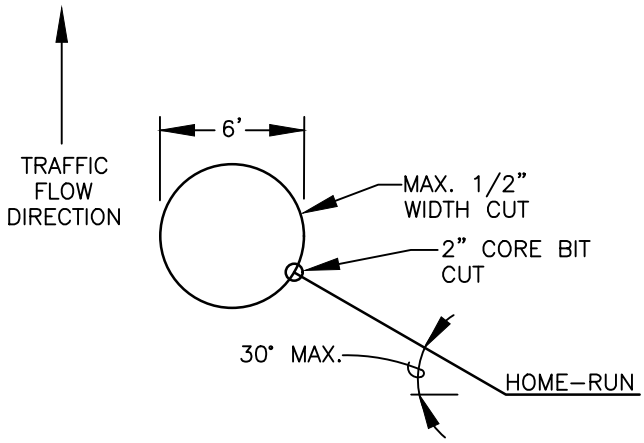

TRAVEL LANE

LOOP DETECTOR CONFIGURATION

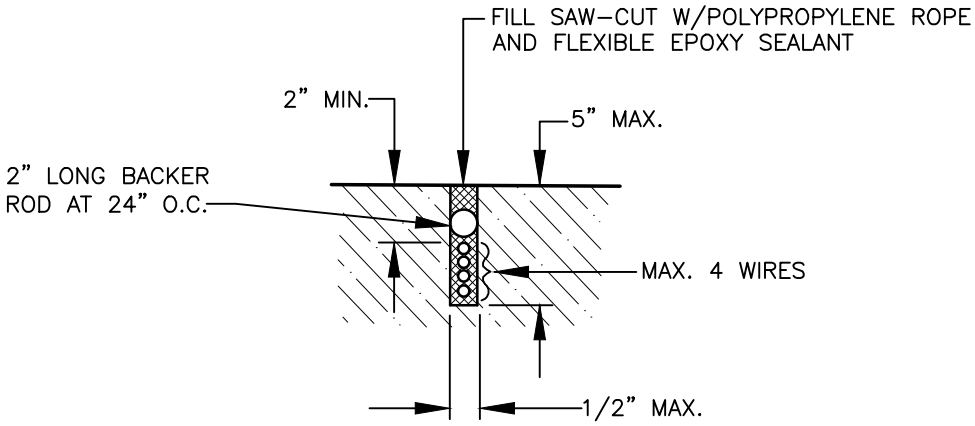

SAWCUT DETAIL

REV NO.	DATE	BY	APPR
1	8/04	RAW	AGE
2	3/06	RAW	AGE
3	2/07	RAW	AGE
4	8/08	RAW	AGE
5	1/15	RAW	CJC
6	9/21	RAW	CJC

PUBLIC WORKS – STREETS AND TRANSPORTATION

APPROVED BY: TRAFFIC ENGINEER MANAGER

APPROVED DATE: 9/1/2021

CITY OF Vancouver WASHINGTON

LOOP NUMBERING
LOOP DETECTOR CONFIGURATION
AND SAWCUT DETAILS

STANDARD PLAN NUMBER

T20–33

I:\CITYAPPS\AUTOCAD\STD_DETAILS\DRAWING_FILES\T20–33

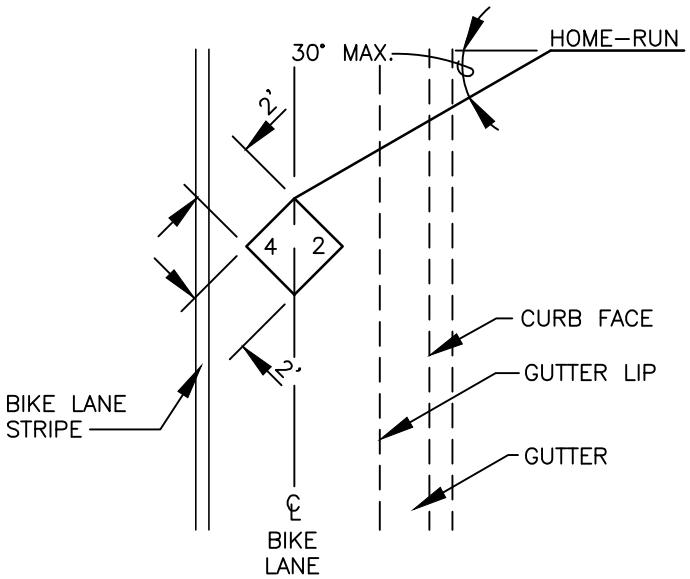

BIKE LANE

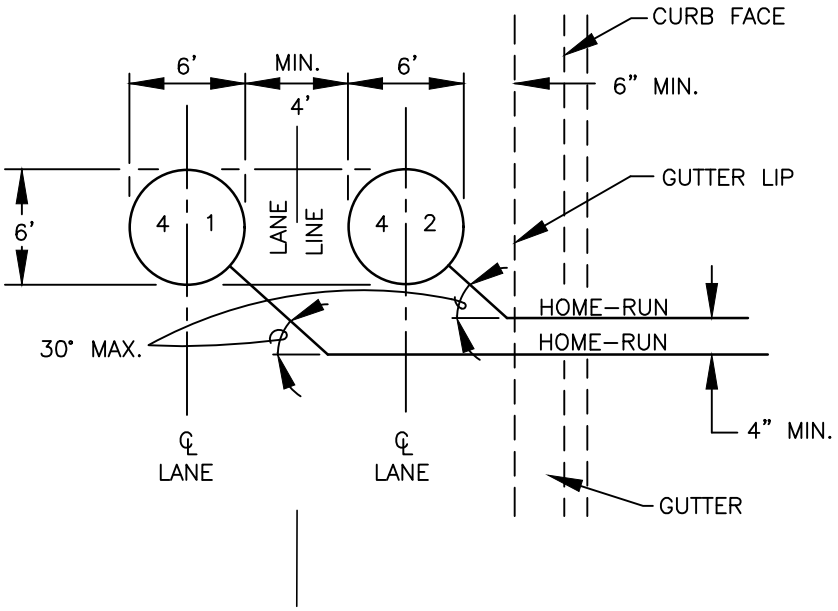

TRAVEL LANE

REV NO.	DATE	BY	APPR
1	8/04	RAW	AGE
2	3/06	RAW	AGE
3	2/07	RAW	AGE
4	8/08	RAW	AGE
5	1/15	RAW	CJC
6	9/21	RAW	CJC

PUBLIC WORKS – STREETS AND TRANSPORTATION

APPROVED BY: TRAFFIC ENGINEER MANAGER

APPROVED DATE: 9/1/2021

CITY OF Vancouver WASHINGTON

DETECTOR LOOP POSITION DETAILS

STANDARD PLAN NUMBER

T20–34

I:\CITYAPPS\AUTOCAD\STD_DETAILS\DRAWING_FILES\T20–34

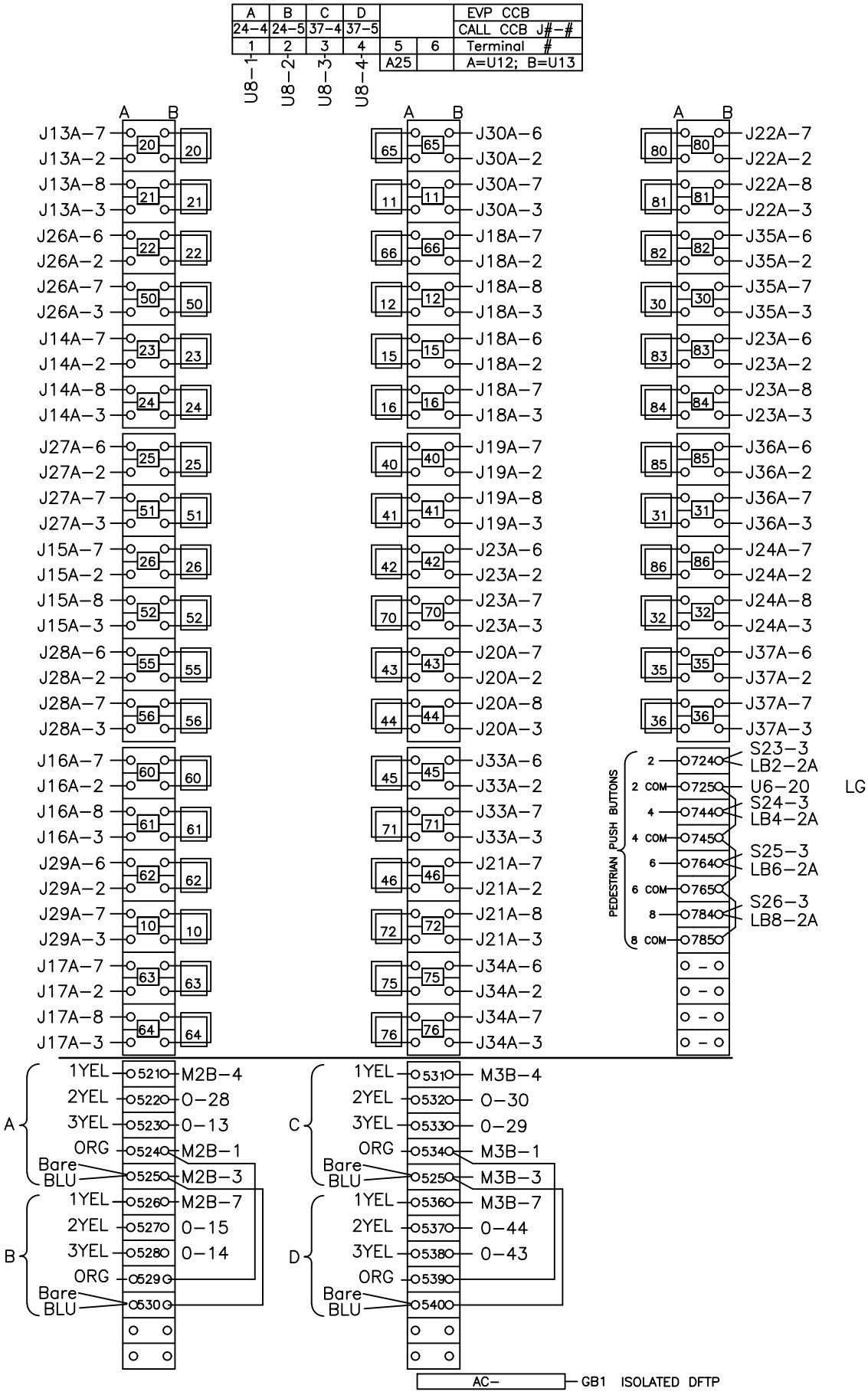

REV NO.	DATE	BY	APPR
1	1/05	RAW	AGE
2	3/06	RAW	AGE
3	2/07	RAW	AGE
4	8/08	RAW	AGE
5	7/14	RAW	CJC
6	9/21	RAW	CJC

PUBLIC WORKS – STREETS AND TRANSPORTATION

APPROVED BY: TRAFFIC ENGINEER MANAGER

APPROVED DATE: 9/1/2021

CITY OF Vancouver WASHINGTON

INPUT TERMINAL FOR "P" CABINET DETECTION PANEL ASSEMBLY

STANDARD PLAN NUMBER

T20-35A

I:\CITYAPPS\AUTOCAD\STD_DETAILS\DRAWING_FILES\T20-35A

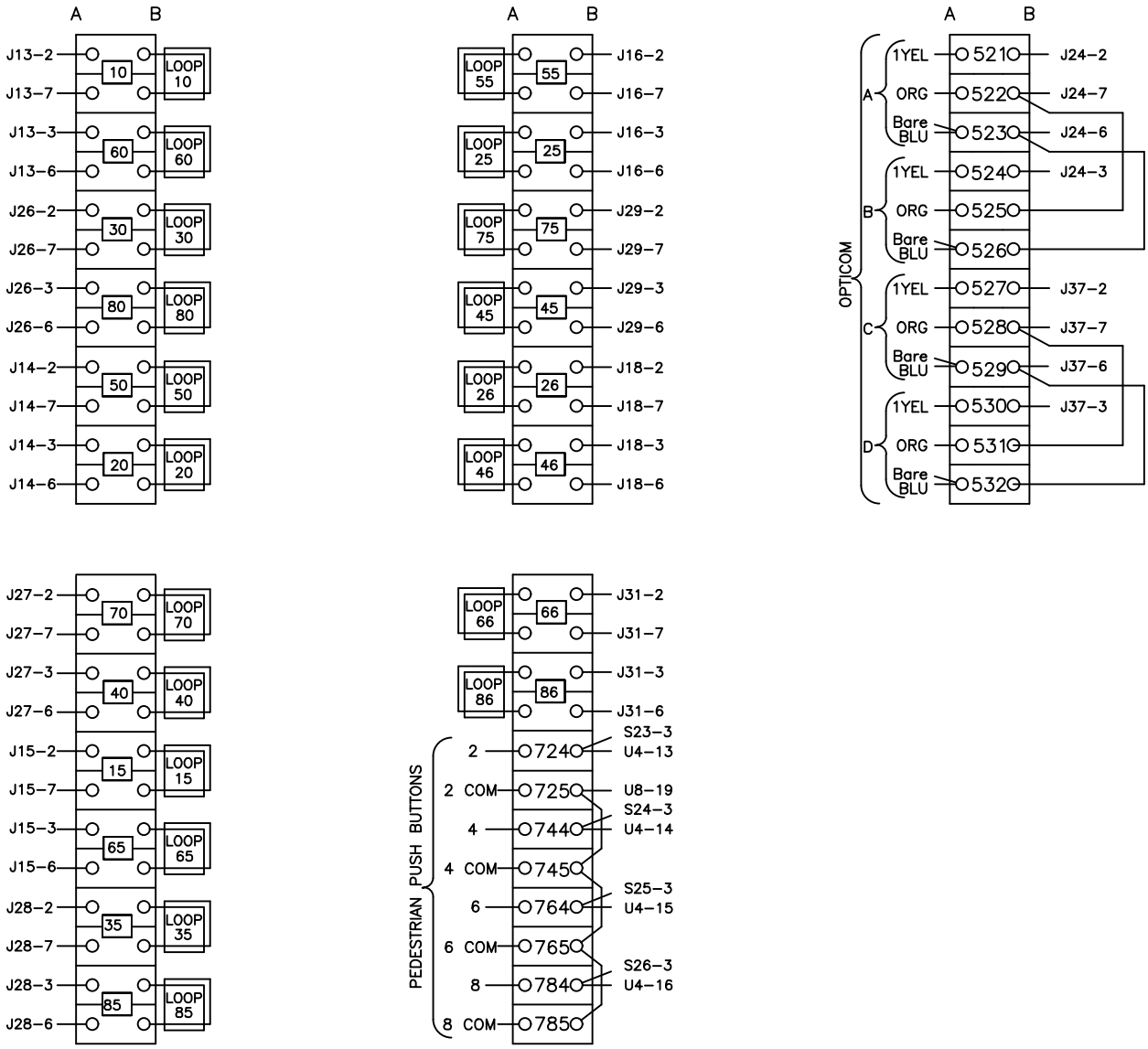

REV NO.	DATE	BY	APPR
1	1/05	RAW	AGE
2	3/06	RAW	AGE
3	2/07	RAW	AGE
4	8/08	RAW	AGE
5	1/15	RAW	CJC
6	9/21	RAW	CJC

PUBLIC WORKS – STREETS AND TRANSPORTATION

APPROVED BY: TRAFFIC ENGINEER MANAGER

APPROVED DATE: 9/1/2021

CITY OF Vancouver WASHINGTON

INPUT TERMINAL FOR "MSX" CABINET DETECTION PANEL ASSEMBLY

STANDARD PLAN NUMBER

T20–35B

I:\CITYAPPS\AUTOCAD\STD_DETAILS\DRAWING_FILES\T20–35B

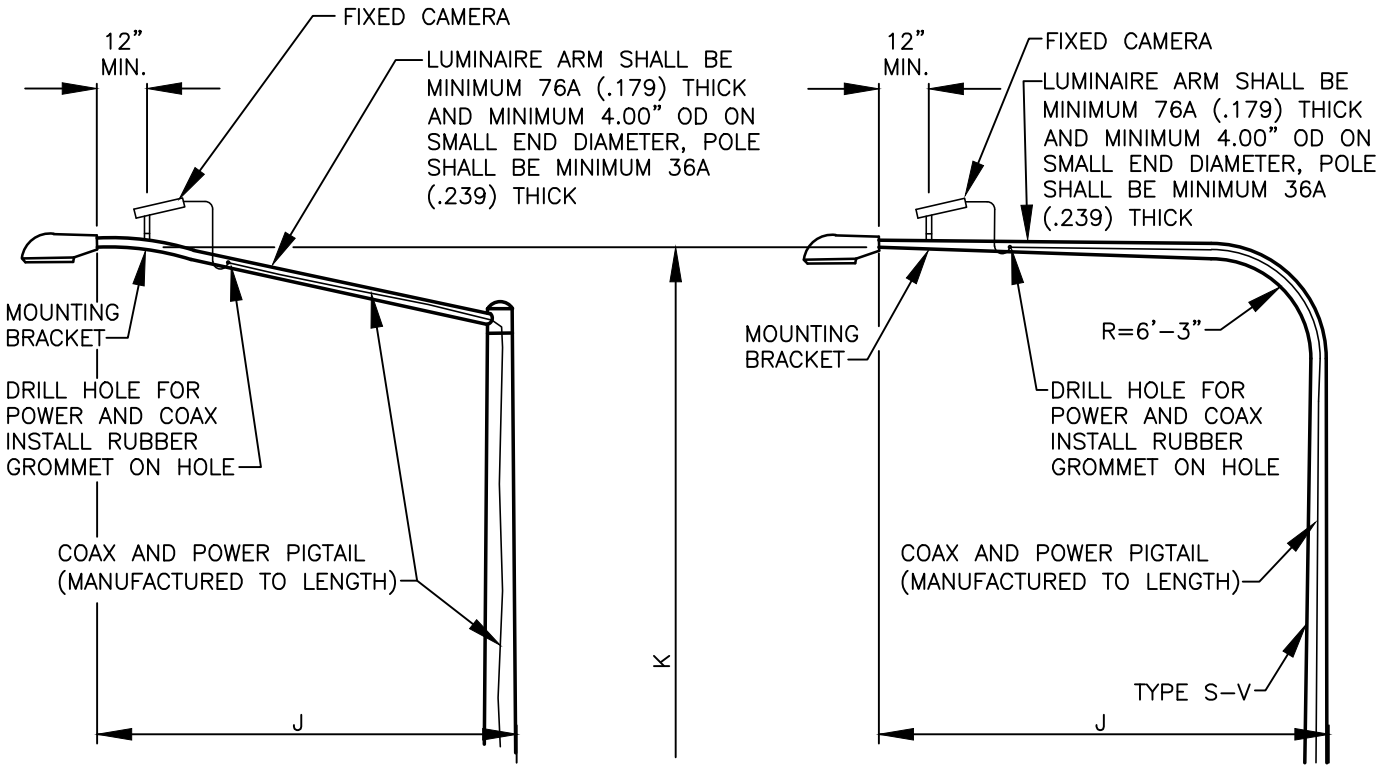

LIGHTING MAST ARM

VIDEO MAST ARM

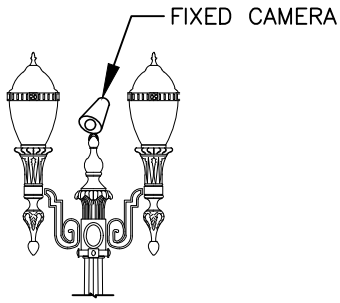

POST TOP

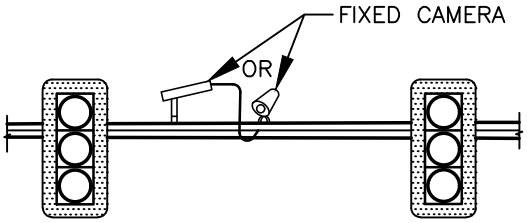

SIGNAL MAST ARM

REV NO.	DATE	BY	APPR
1	7/14	RAW	AGE
2	9/21	RAW	CJC

PUBLIC WORKS – STREETS AND TRANSPORTATION

APPROVED BY: TRAFFIC ENGINEER MANAGER

APPROVED DATE: 9/1/2021

CITY OF Vancouver WASHINGTON

VIDEO CAMERA MOUNTING DETAILS

STANDARD PLAN NUMBER

T20-37A

I:\CITYAPPS\AUTOCAD\STD_DETAILS\DRAWING_FILES\T20-37A

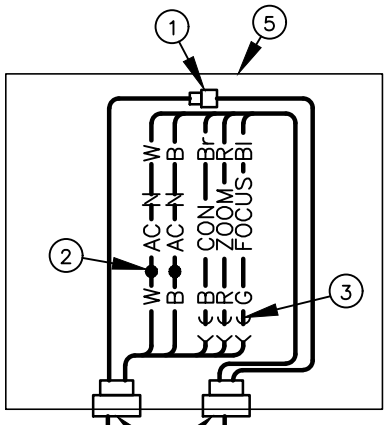

KEY:

B – BLACK
W – WHITE
R – RED
G – GREEN
Br – BROWN
Bl – BLUE

NOTES:

1. RG–59 COAX CONNECTOR
2. WIRE NUTS
3. INSULATED MALE/FEMALE SPADE CONNECTORS
4. CGB WEATHERTIGHT FITTINGS
5. ENCLOSURE

TO CAMERA:
DUAL–ELEMENT
SIX–CONDUCTOR

TO ENCLOSURE:
DUAL–ELEMENT
SIX–CONDUCTOR

VIDEO SPLICE ENCLOSURE INTERNAL WIRING

NTS

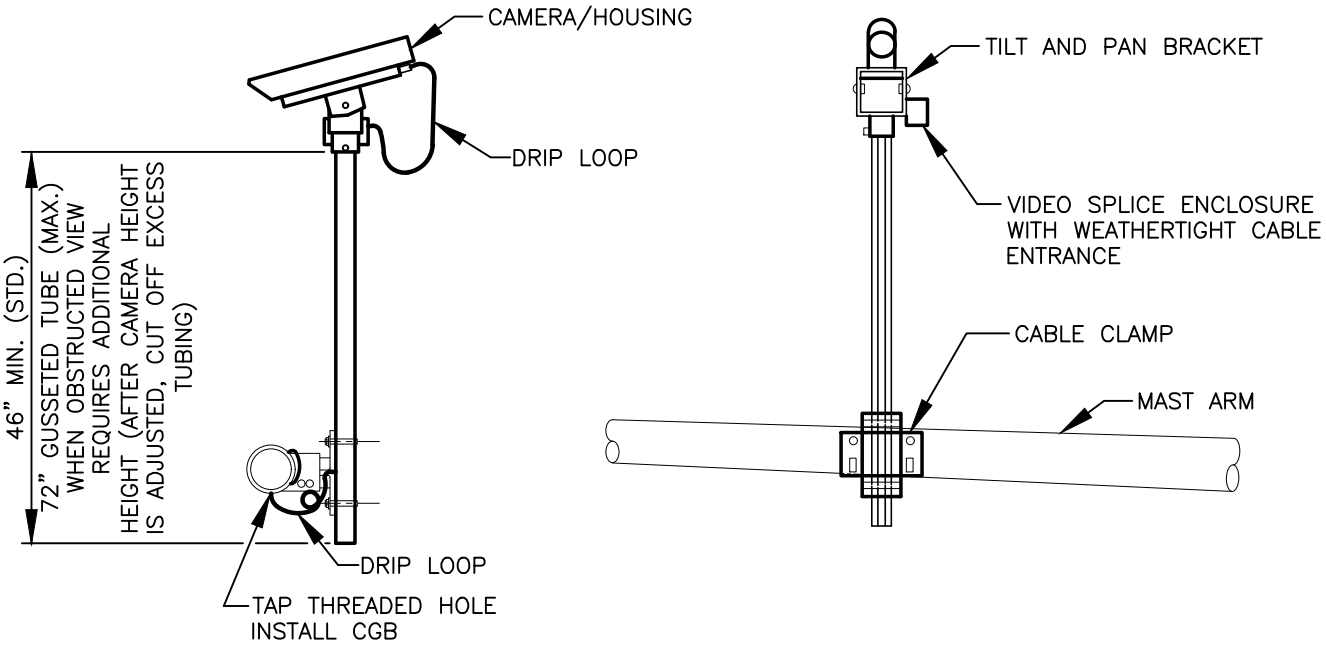

VIDEO DETECTION NOTES:

1. CAMERA ROTATION IN HOUSINGS TO BE ADJUSTED TO PROVIDE LEVEL MONITOR PICTURE.
2. DRIP LOOP SHALL BE 6 TO 8 INCHES.
3. ALL HARDWARE FASTENERS SHALL BE STAINLESS STEEL, TORQUED TO MANUFACTURER'S RECOMMENDATIONS WITH LOCKNUTS.
4. POWER LEADS SHALL BE INSTALLED WITH SUITABLE COPPER OPEN SPADES.
5. BNC CONNECTORS SHALL CONFORM TO VIDEO VENDERS RECOMMENDATIONS.
6. CONTRACTOR SHALL UTILIZE TOOLS AS RECOMMENDED BY VIDEO VENDOR.
7. TILT AND PAN BRACKET, SENSOR BRACKET SHALL BE ALODINED ALUMINUM.
8. THE UNIVERSAL HUB PLATE SHALL BE CAST ALUMINUM.
9. ALL FASTENER PENETRATIONS OF CABINET SHALL BE SEALED WITH APPROVED METHOD.

REV NO.	DATE	BY	APPR
1	7/14	RAW	CJC
2	1/15	RAW	CJC
3	9/21	RAW	CJC

PUBLIC WORKS – STREETS AND TRANSPORTATION

APPROVED BY: TRAFFIC ENGINEER MANAGER

APPROVED DATE: 9/1/2021

CITY OF Vancouver WASHINGTON

VIDEO CAMERA MOUNTING ON MAST ARM DETAILS

STANDARD PLAN NUMBER T20–37B

I:\CITYAPPS\AUTOCAD\STD_DETAILS\DRAWING_FILES\T20–37B

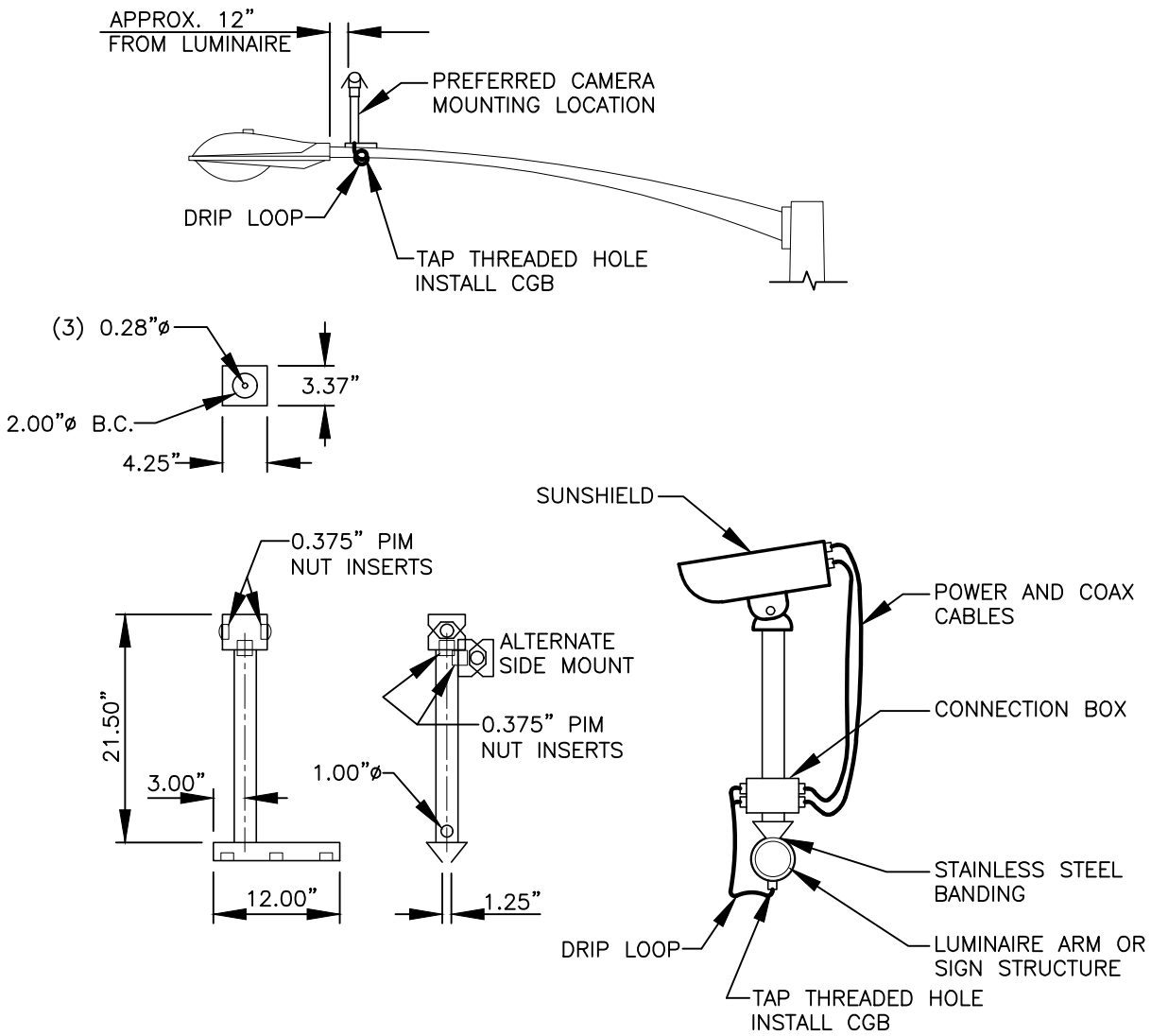

VIDEO DETECTOR CAMERA MOUNTING DETAIL

REV NO.	DATE	BY	APPR
1	7/14	RAW	CJC
2	9/21	RAW	CJC

PUBLIC WORKS – STREETS AND TRANSPORTATION

APPROVED BY: TRAFFIC ENGINEER MANAGER

APPROVED DATE: 9/1/2021

CITY OF Vancouver WASHINGTON

VIDEO CAMERA MOUNTING ON SAFETY LIGHTS DETAILS

STANDARD PLAN NUMBER

T20–37C

I:\CITYAPPS\AUTOCAD\STD_DETAILS\DRAWING_FILES\T20–37C

KEY:

B – BLACK
W – WHITE
R – RED
G – GREEN
Br – BROWN
Bl – BLUE

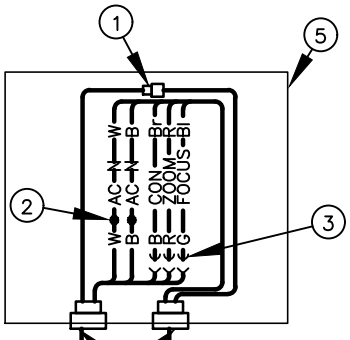

NOTES:

1. CAT5e COAX CONNECTOR
2. WIRE NUTS
3. INSULATED MALE/FEMALE SPADE CONNECTORS
4. CGB WEATHERTIGHT FITTINGS
5. ENCLOSURE

TO CAMERA:
DUAL–ELEMENT SIX–CONDUCTOR

TO ENCLOSURE:
DUAL–ELEMENT SIX–CONDUCTOR

VIDEO SPLICE ENCLOSURE INTERNAL WIRING

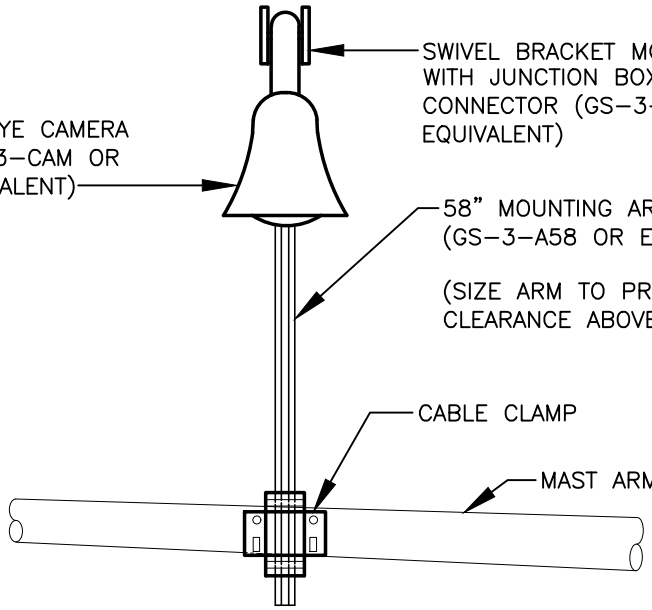

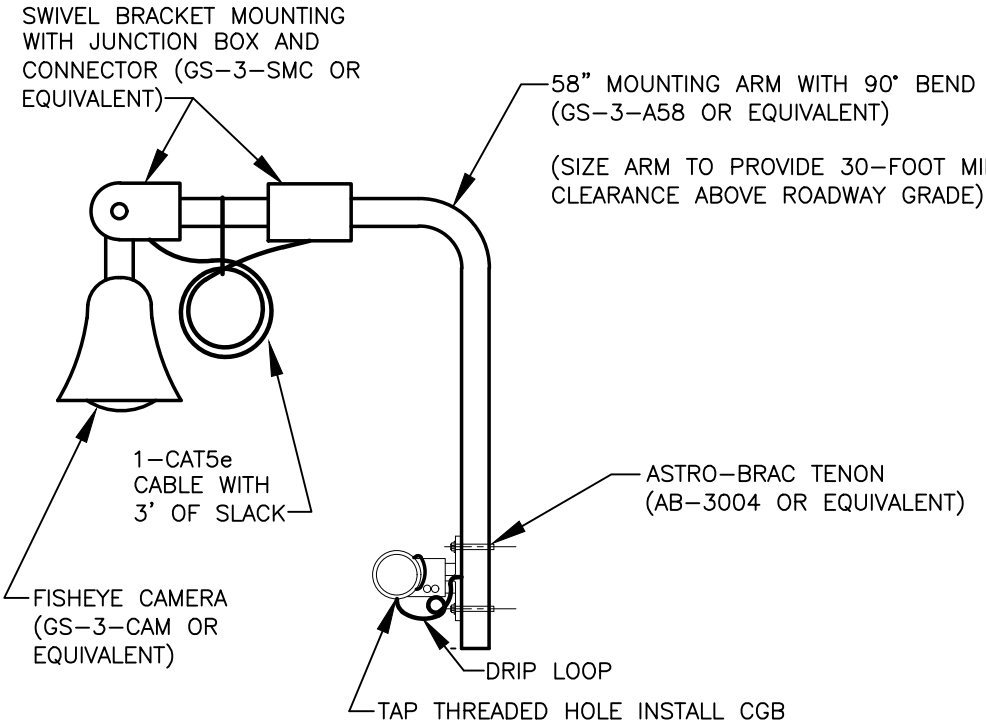

REV NO.	DATE	BY	APPR
1	4/18	RAW	CJC
2	9/21	RAW	CJC

PUBLIC WORKS – STREETS AND TRANSPORTATION

APPROVED BY: TRAFFIC ENGINEER MANAGER
APPROVED DATE: 9/1/2021

CITY OF Vancouver WASHINGTON

FISHEYE VIDEO CAMERA MOUNTING ON MAST ARM DETAILS

STANDARD PLAN NUMBER
T20–37D

I:\CITYAPPS\AUTOCAD\STD_DETAILS\DRAWING_FILES\T20–37D

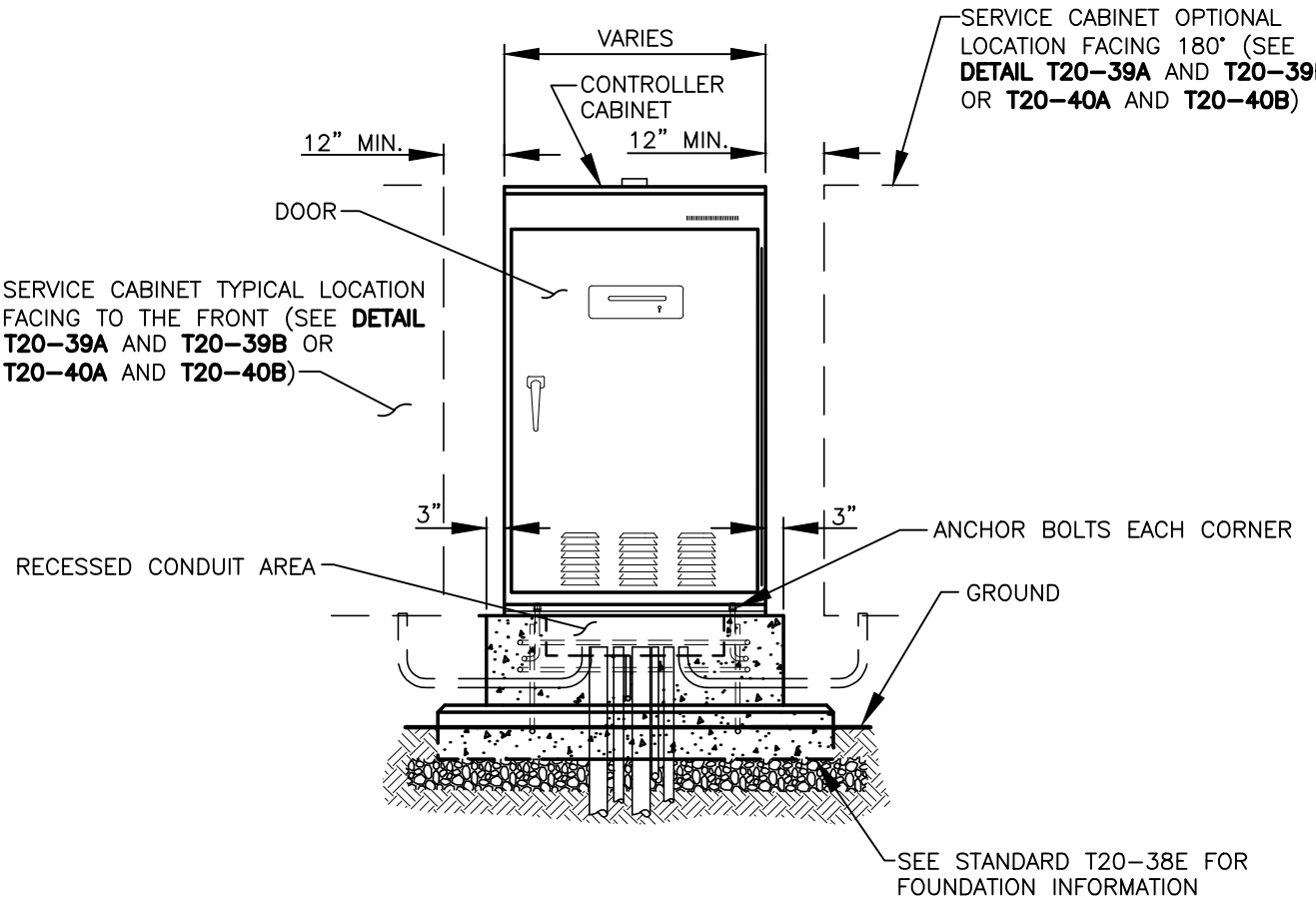

FRONT AND BACK VIEW (SECTION A–A)

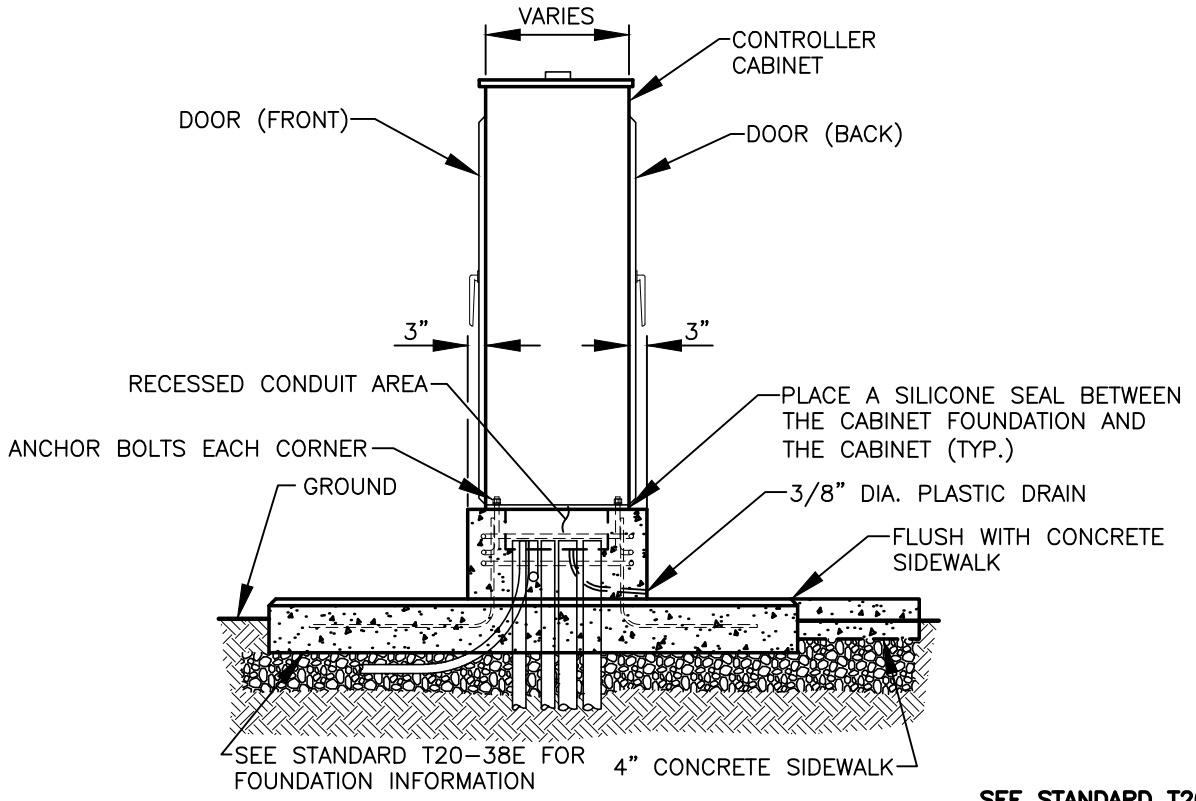

SIDE VIEW (SECTION B–B)

SEE STANDARD T20–38E FOR PLAN VIEW

REV NO.	DATE	BY	APPR
1	3/17	RAW	CJC
2	4/18	RAW	CJC
3	9/21	RAW	CJC

PUBLIC WORKS – STREETS AND TRANSPORTATION

APPROVED BY: TRAFFIC ENGINEER MANAGER

APPROVED DATE: 9/1/2021

CITY OF Vancouver WASHINGTON

TYPICAL FRONT AND BACK DOOR CABINET PAD INSTALLATION DETAILS

STANDARD PLAN NUMBER

T20–38B

I:\CITYAPPS\AUTOCAD\STD_DETAILS\DRAWING_FILES\T20–38B

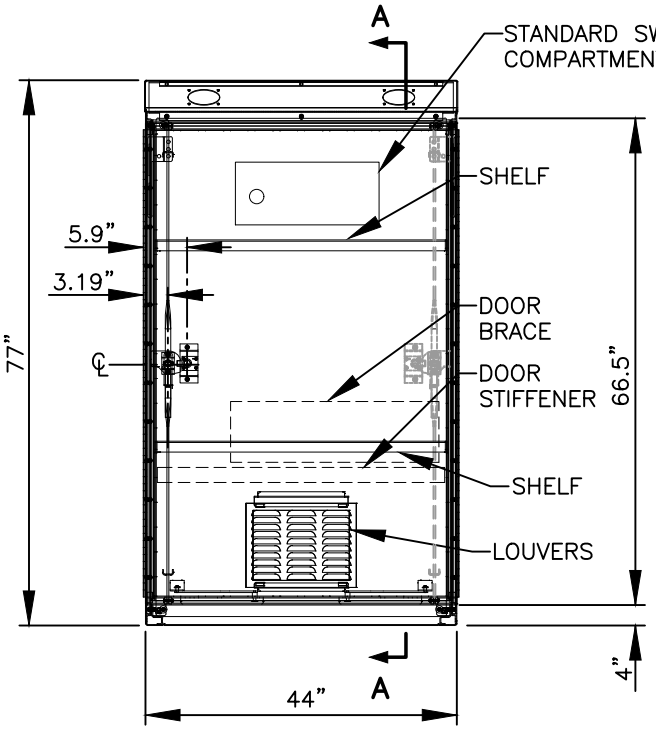

FRONT

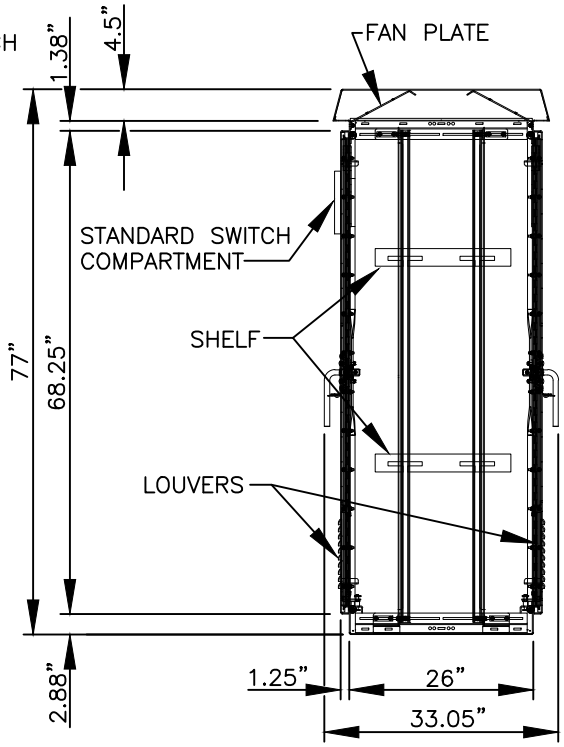

SECTION A–A

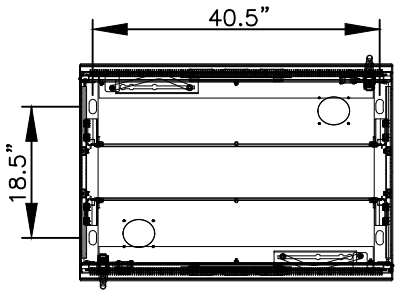

TOP

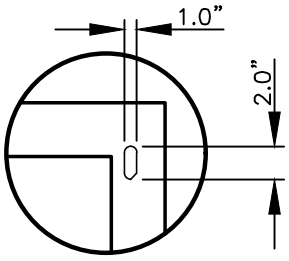

DETAIL B

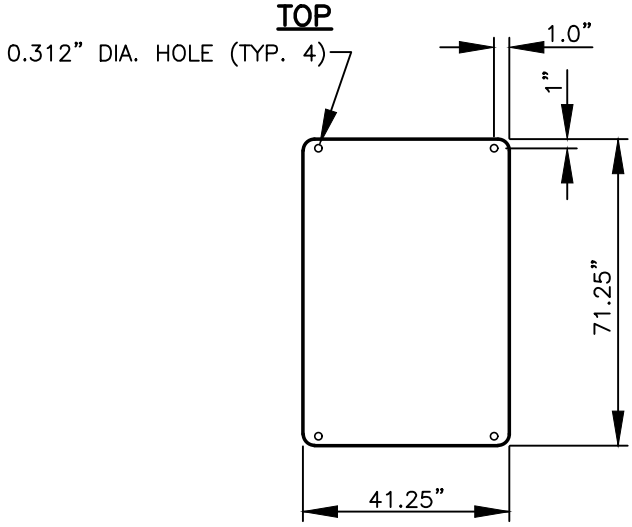

ALUMINUM CENTER PANELS

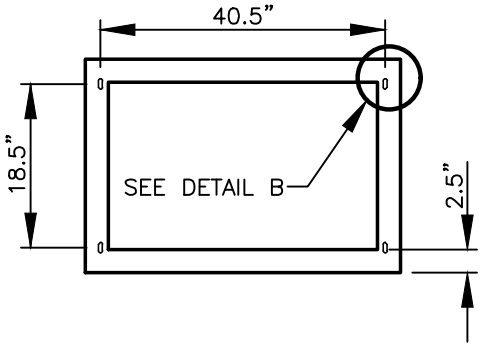

PAD MOUNTING PATTERN

NOTE:

1. FRONT AND BACK DOOR "P" CABINET PART NO. FR443624, CITY OF VANCOUVER SPECIFICATIONS, MANUFACTURED BY APX ENCLOSURE, INC. OR APPROVED EQUAL.

REV NO.	DATE	BY	APPR
1	3/17	RAW	CJC
2	9/21	RAW	CJC

PUBLIC WORKS – STREETS AND TRANSPORTATION

APPROVED BY: TRAFFIC ENGINEER MANAGER

APPROVED DATE: 9/1/2021

CITY OF Vancouver WASHINGTON

TYPICAL FRONT AND BACK DOOR "P" CABINET DETAILS

STANDARD PLAN NUMBER

T20–38D

I:\CITYAPPS\AUTOCAD\STD_DETAILS\DRAWING_FILES\T20–38D

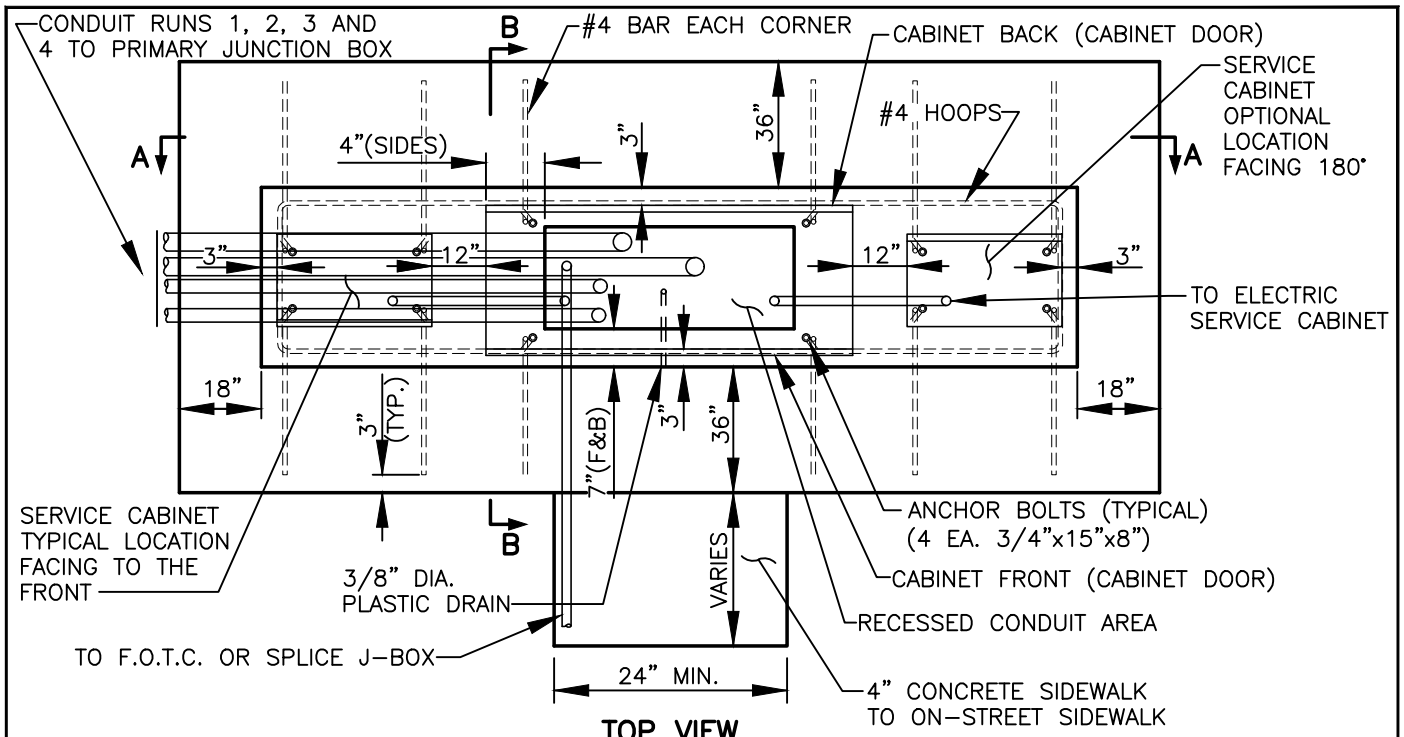

TOP VIEW

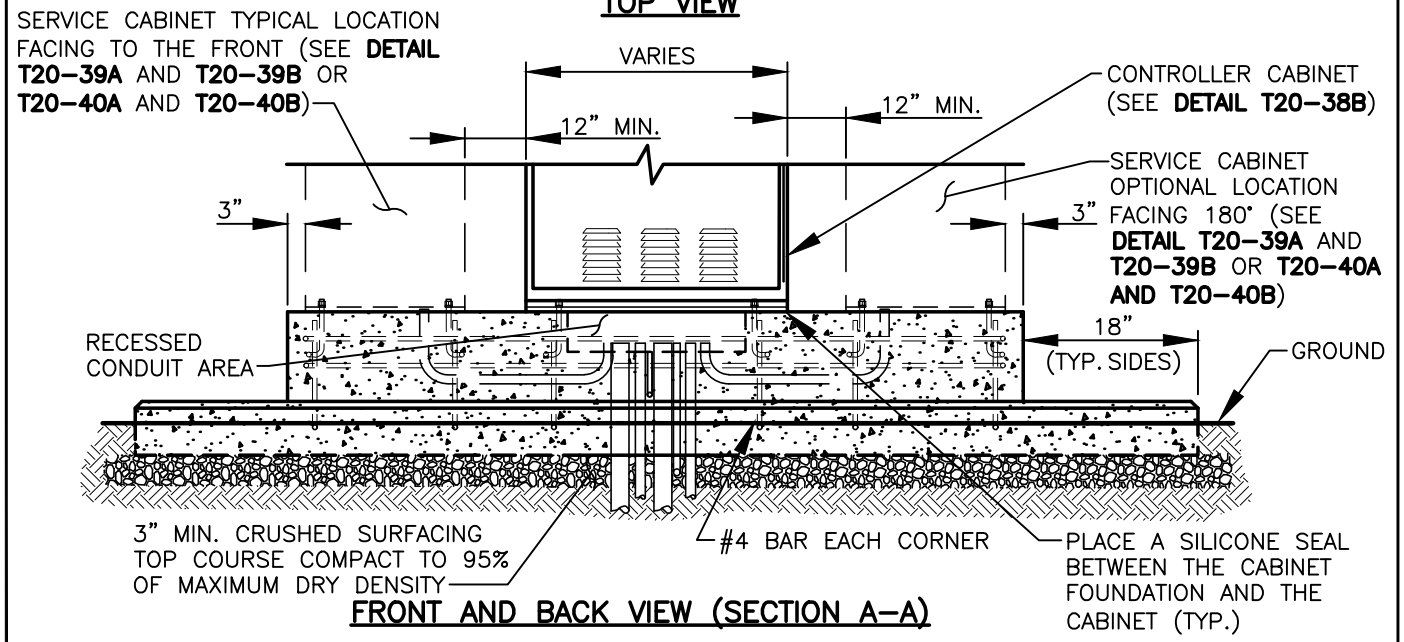

FRONT AND BACK VIEW (SECTION A-A)

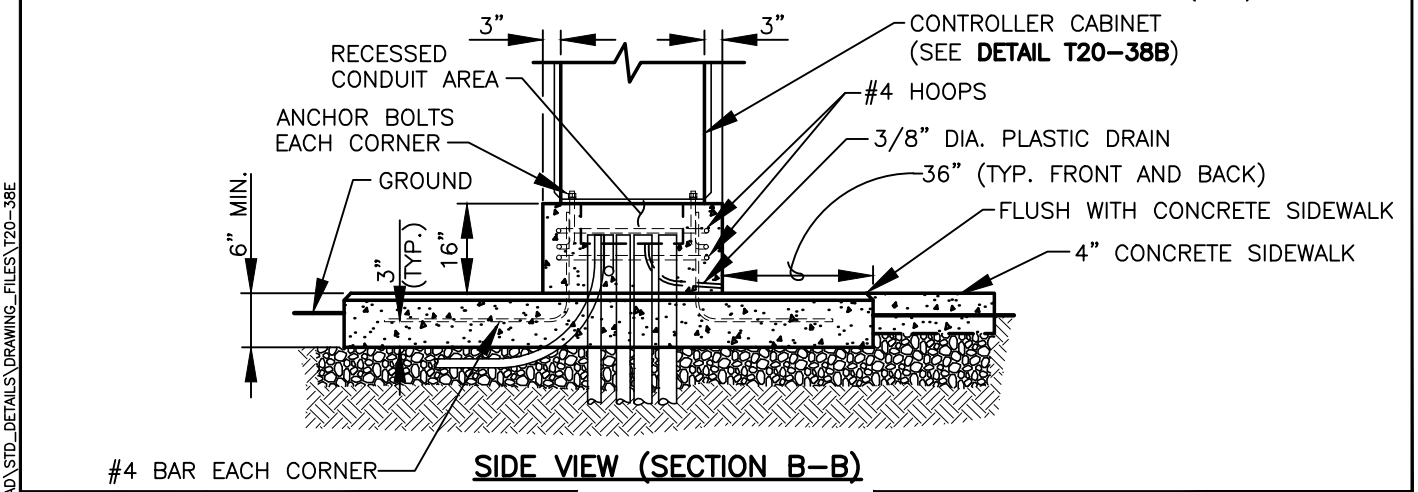

SIDE VIEW (SECTION B-B)

REV NO.	DATE	BY	APPR
1	4/18	RAW	CJC
2	9/21	RAW	CJC

PUBLIC WORKS – STREETS AND TRANSPORTATION

APPROVED BY: TRAFFIC ENGINEER MANAGER

APPROVED DATE: 9/1/2021

CITY OF Vancouver WASHINGTON

CONTROLLER CABINET FOUNDATION

STANDARD PLAN NUMBER T20-38E

P:\CITYAPPS\AUTOCAD\STD_DETAILS\DRAWING_FILES\T20-38E

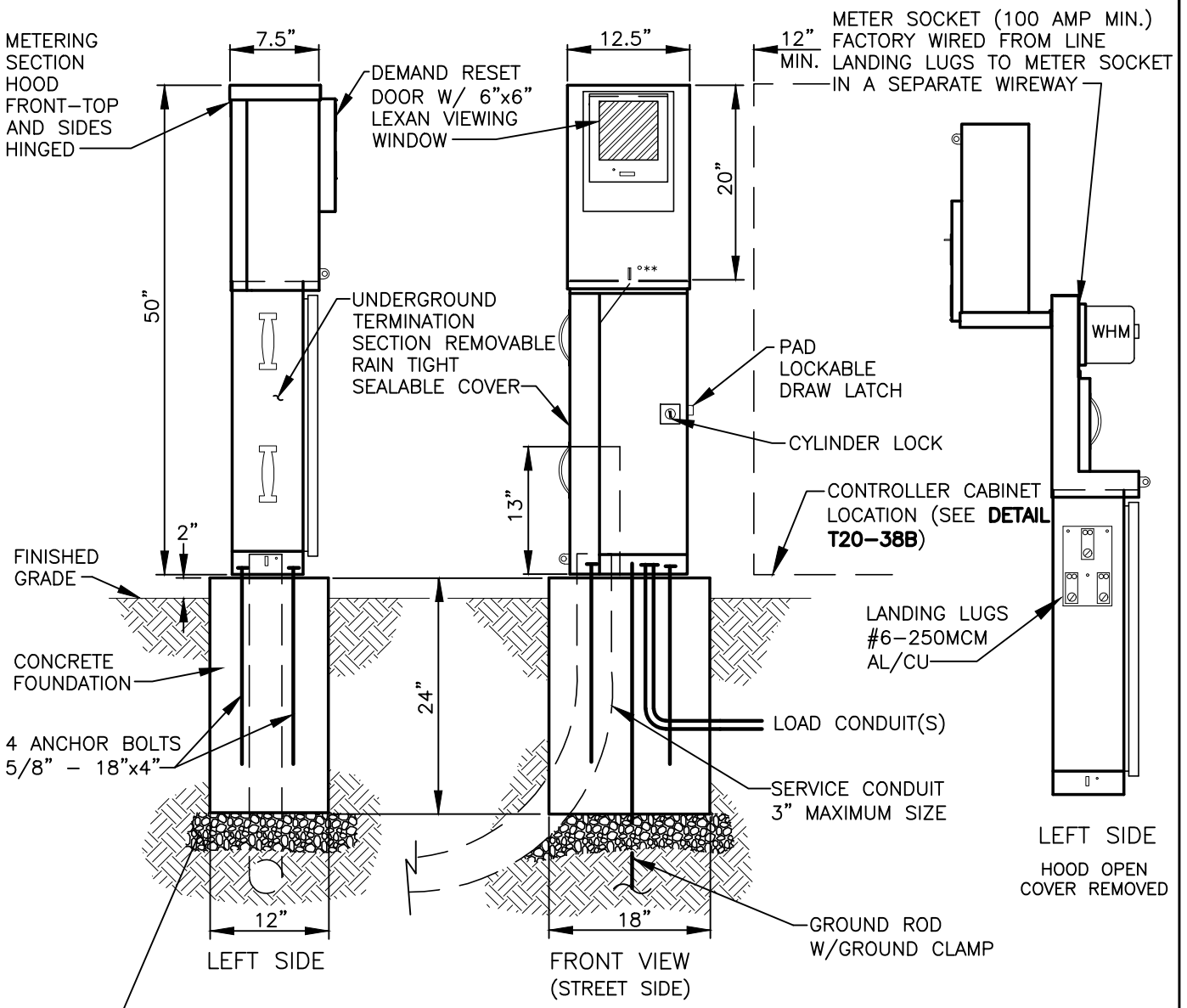

SERVICE CABINET PEDESTAL DETAIL

3" MIN. CRUSHED SURFACING TOP COURSE COMPACT TO 95% OF MAXIMUM DRY DENSITY

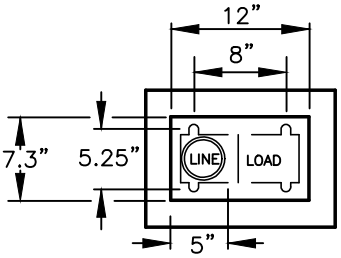

BASE PLAN

NOTES:

1. SEE SERVICE ENCLOSURE REQUIREMENTS ON DETAIL **T20–41**.
2. SEE WIRING DIAGRAM ON DETAIL **T20–39B**.
3. WHEN SERVICE CABINET IS INSTALLED ADJACENT TO ANOTHER CABINET, SEE DETAIL **T20–38B AND T20–38E** FOR PLACEMENT.
4. PLACE A SILICONE SEAL BETWEEN THE CABINET FOUNDATION AND THE CABINET.
5. ENCLOSURE SHALL BE TESCO CLASS 26–000M–A OR CITY APPROVED EQUAL PRIOR TO BID.

REV NO.	DATE	BY	APPR
1	2/07	RAW	AGE
2	8/08	RAW	AGE
3	3/15	RAW	CJC
4	4/18	RAW	CJC
5	7/19	RAW	CJC
6	9/21	RAW	CJC

PUBLIC WORKS – STREETS AND TRANSPORTATION

APPROVED BY: TRAFFIC ENGINEER MANAGER

APPROVED DATE: 9/1/2021

CITY OF Vancouver WASHINGTON

TRAFFIC SIGNAL SERVICE CABINET DETAILS

STANDARD PLAN NUMBER T20–39A

I:\CITYAPPS\AUTOCAD\STD_DETAILS\DRAWING_FILES\T20–39A

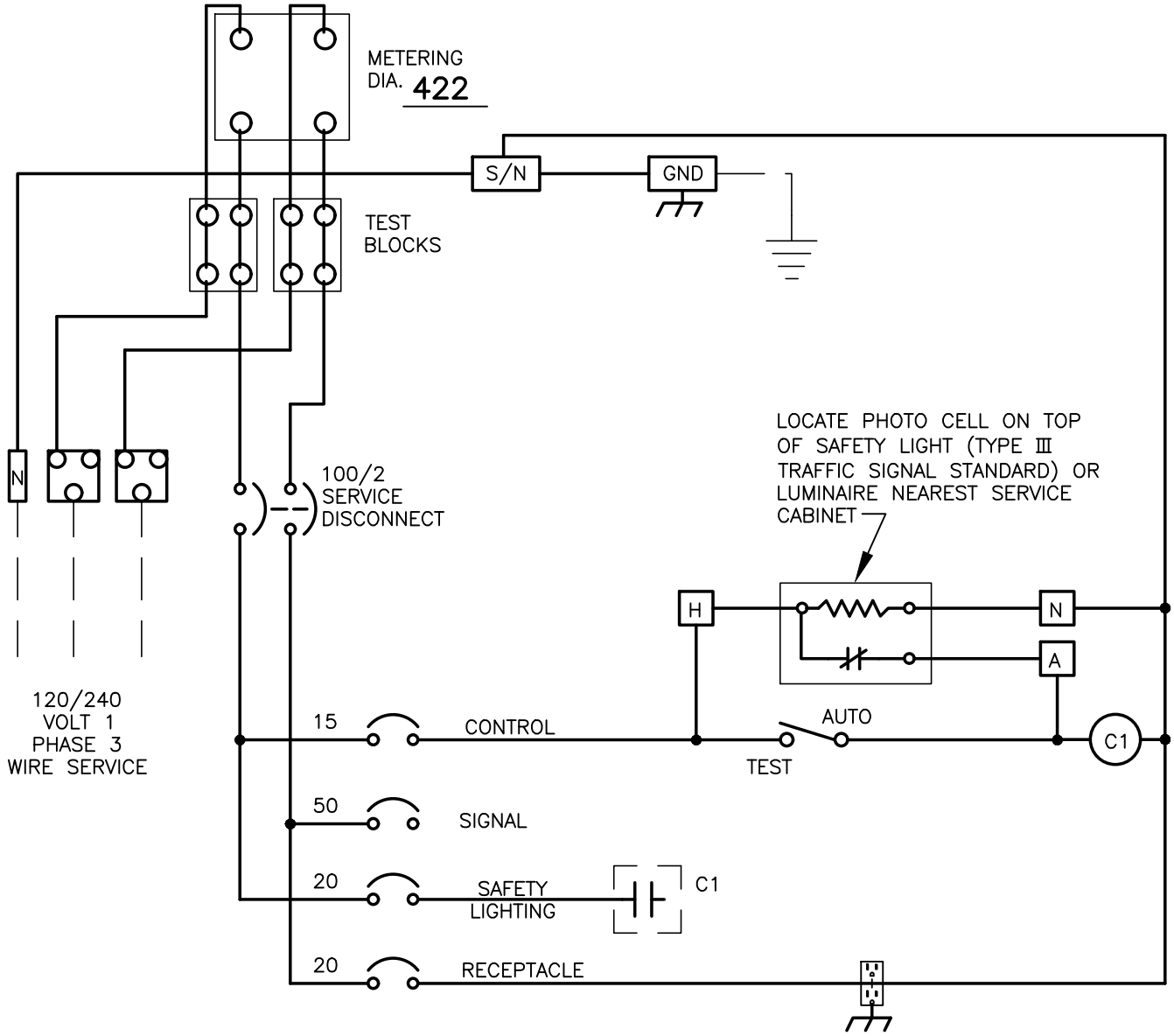

NOTE:

SEE DETAIL **T20–39A** FOR SERVICE CABINET PEDESTAL DETAIL.

REV NO.	DATE	BY	APPR
1	2/07	RAW	AGE
2	8/08	RAW	AGE
3	1/15	RAW	CJC
4	4/18	RAW	CJC
5	7/19	RAW	CJC
6	9/21	RAW	CJC

PUBLIC WORKS – STREETS AND TRANSPORTATION

APPROVED BY: TRAFFIC ENGINEER MANAGER

APPROVED DATE: 9/1/2021

CITY OF Vancouver WASHINGTON

TRAFFIC SIGNAL SERVICE WIRING DIAGRAM

STANDARD PLAN NUMBER T20–39B

I:\CITYAPPS\AUTOCAD\STD_DETAILS\DRAWING_FILES\T20–39B

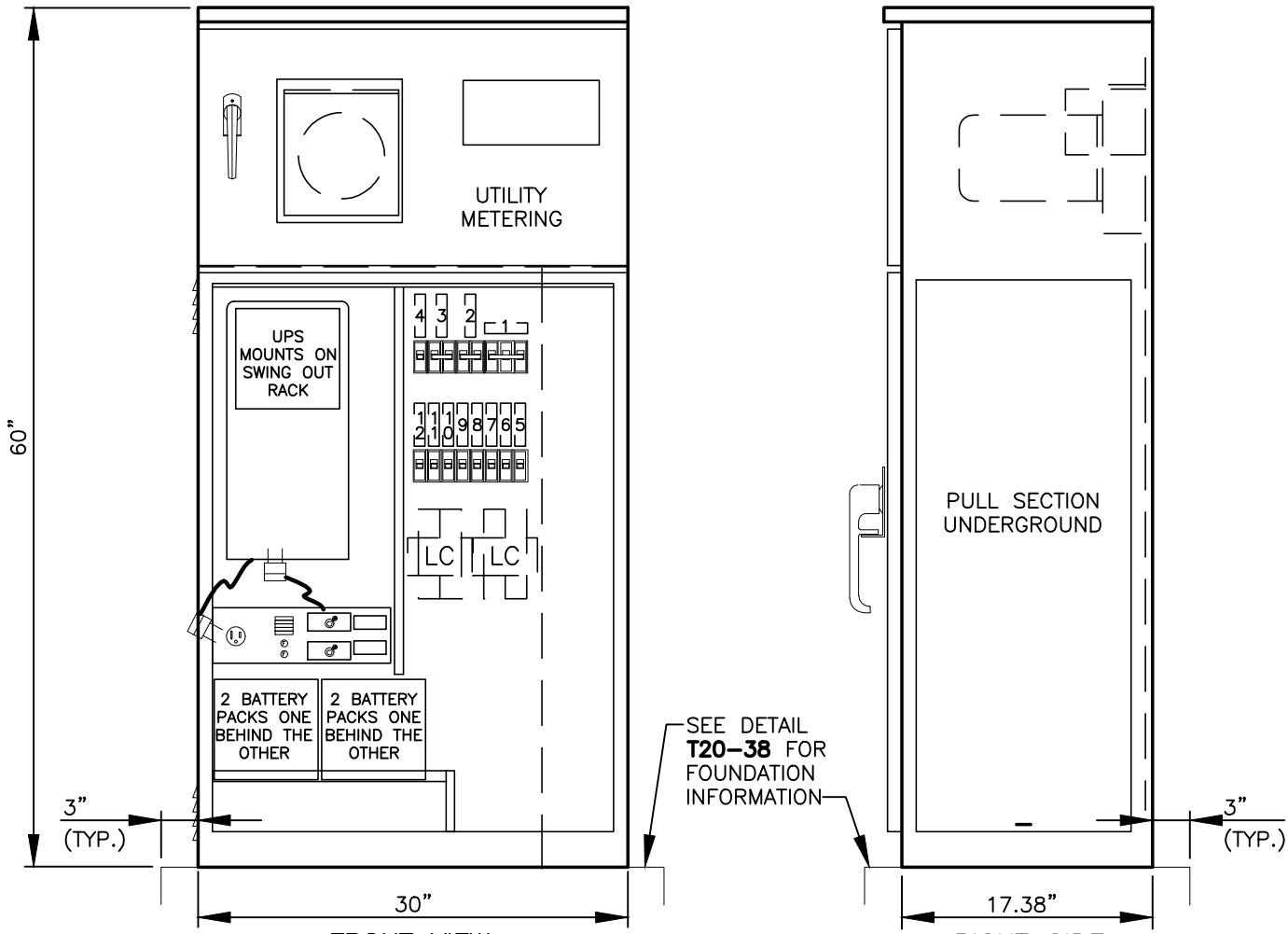

FRONT VIEW

RIGHT SIDE

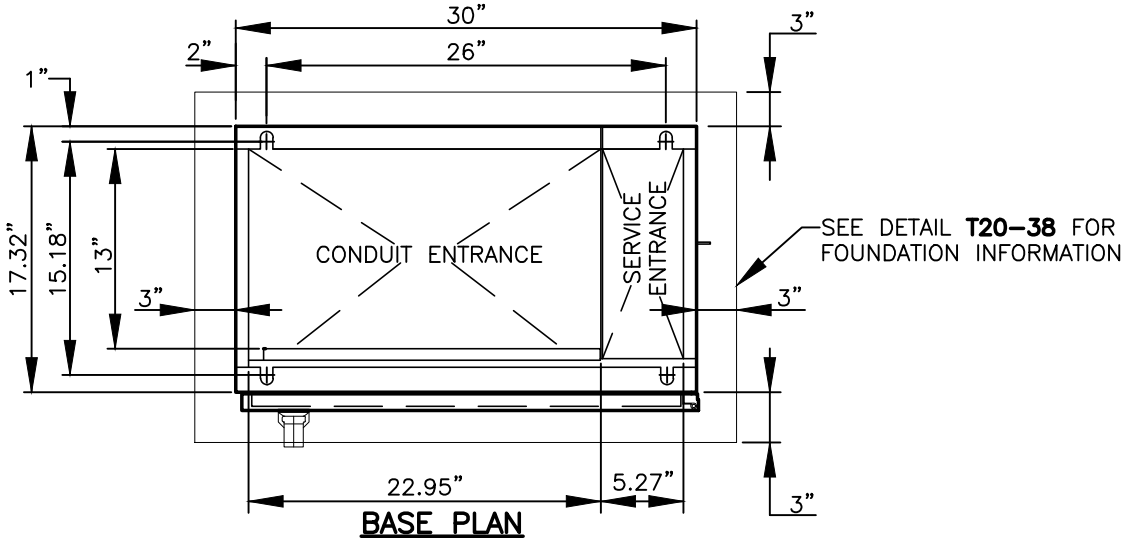

BASE PLAN

NOTES:

1. SEE SERVICE ENCLOSURE REQUIREMENTS ON DETAIL **T20-41**.
2. SEE WIRING DIAGRAM ON DETAIL **T20-40B**.
3. SERVICE CABINET TO BE INSTALLED ON SEPARATE FOUNDATION 10 TO 20 FEET FROM CONTROLLER CABINET. SEE DETAIL **T20-38** FOR FOUNDATION INFORMATION.
4. ENCLOSURE SHALL BE TESCO CLASS 24-000M-A OR CITY APPROVED EQUAL PRIOR TO BID.
5. FACE CABINET TOWARDS MAJOR STREET.

REV NO.	DATE	BY	APPR
1	8/04	RAW	AGE
2	8/08	RAW	AGE
3	7/14	RAW	CJC
4	7/19	RAW	CJC
5	9/21	RAW	CJC

PUBLIC WORKS – STREETS AND TRANSPORTATION

APPROVED BY: TRAFFIC ENGINEER MANAGER

APPROVED DATE: 9/1/2021

CITY OF Vancouver WASHINGTON

TRAFFIC SIGNAL SERVICE WITH BATTERY BACKUP ELECTRICAL CABINET DETAIL

STANDARD PLAN NUMBER

T20-40A

I:\CITYAPPS\AUTOCAD\STD_DETAILS\DRAWING_FILES\T20-40A

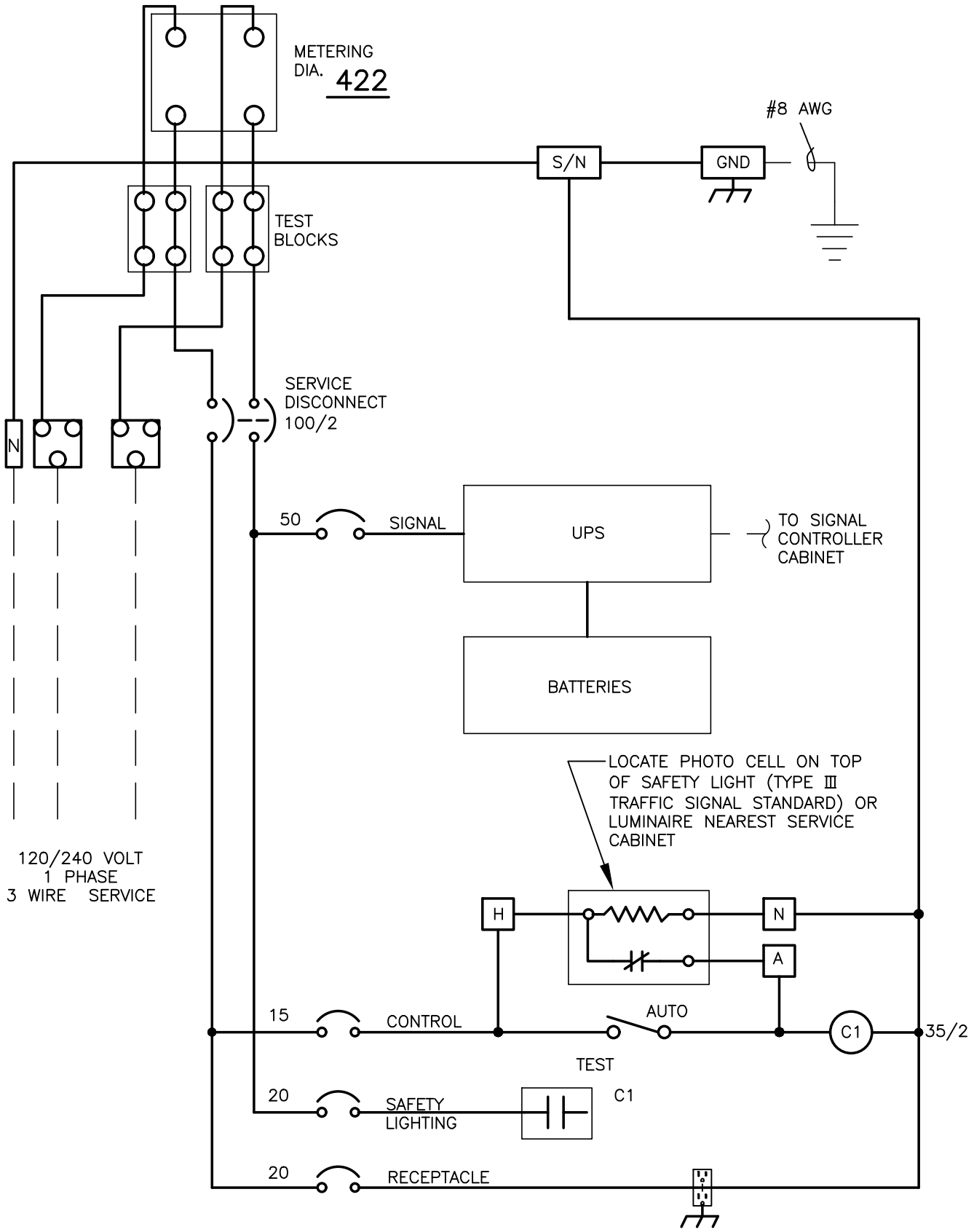

NOTE:

SEE DETAIL **T20–40A** FOR SERVICE AND BATTERY BACKUP ELECTRICAL CABINET LAYOUT.

REV NO.	DATE	BY	APPR
1	2/07	RAW	AGE
2	8/08	RAW	AGE
3	1/15	RAW	CJC
4	4/18	RAW	CJC
5	7/19	RAW	CJC
6	9/21	RAW	CJC

PUBLIC WORKS – STREETS AND TRANSPORTATION

APPROVED BY: TRAFFIC ENGINEER MANAGER

APPROVED DATE: 9/1/2021

CITY OF Vancouver WASHINGTON

TRAFFIC SIGNAL SERVICE WITH BATTERY BACKUP WIRING DIAGRAM

STANDARD PLAN NUMBER

T20–40B

I:\CITYAPPS\AUTOCAD\STD_DETAILS\DRAWING_FILES\T20–40B

NOTES:

- ENCLOSURE SHALL MEET EUSERC REQUIREMENTS.
- FABRICATED FROM 5052 1/8" ALUMINUM.
- INTERIOR SHALL BE FABRICATED FROM 14 GAUGE COLD ROLLED STEEL AND PAINTED WHITE.
- ENCLOSURE SHALL BE ANODIZED AFTER FABRICATION.
- ENCLOSURE SHALL HAVE CONTINUOUS WELDED SEAMS.
- FULL LENGTH DEAD FRONT WITH STAINLESS STEEL HINGE.
- FABRICATED BY A MANUFACTURER CARRYING A UL 508 LISTING.
- ENCLOSURE SHALL HAVE PULL SECTION WITH REMOVABLE STEP.
- FULLY FRAMED SIDE HINGED OUTER DOOR WITH SWAGED CLOSE TOLERANCE SIDES FOR FLUSH FIT WITH TOP DRIP LIP AND CLOSED CELL NEOPRENE FLANGE COMPRESSED GASKETS.
- HINGED DEAD FRONT WITH 1/4 TURN LATCH AND KNURLED KNOBS.
- DEAD FRONT DOOR SHALL BE HINGED ON THE SAME SIDE AS EXTERIOR DOOR AND OPEN A MINIMUM OF 100°.
- REMOVABLE BACK PAN SHALL BE MOUNTED ON 4 WELDED 1/4" STUDS.
- ALL CIRCUIT BREAKERS SHALL BE MOUNTED IN A VERTICAL POSITION, HANDLE UP FOR "ON" HANDLE DOWN FOR "OFF".
- ENCLOSURE SHALL CONSIST OF ABSOLUTELY NO "BOLT–ON" OR "PLUG–IN" CIRCUIT BREAKERS.
- ENCLOSURE SHALL BE COMPLETELY PRE–WIRED IN FACTORY. WIRING WILL BE TO NEMA IIB STANDARDS SHOWING EXTERNAL CONNECTIONS AND EXTERNAL EQUIPMENT.
- ALL BUSSING SHALL BE UL APPROVED COPPER THHN CABLE BUSSING, FULLY RATED.
- THE FUNCTION OF ALL CIRCUIT BREAKERS, SWITCHES & OTHER COMPONENTS AS REQUIRED SHALL BE IDENTIFIED BY LAMINATED ENGRAVED PLASTIC NAMEPLATES WITH MINIMUM 1/4" LETTERS FASTENED WITH MINIMUM OF TWO #4–40 STAINLESS STEEL MACHINE SCREWS.
- WIRING SCHEMATICS WILL BE COMPUTER AIDED DRAFTING AND INCLUDE ALL EXTERNAL EQUIPMENT AND CONNECTIONS PER NEMA IIB.
- AS BUILT FACTORY DRAWINGS SHALL BE ENCLOSED IN CLEAR PLASTIC AND HELD INSIDE THE OUTER DOOR BY WELDED HOOKS.
- MANUFACTURERS WILL BE REQUIRED TO FURNISH INDEPENDENT LABORATORY CERTIFICATION OF METAL PREPARATION AND FINISH AND TO CONFIRM THAT THE OVERALL PRODUCT MEETS THESE SPECIFICATIONS. IF THIS AGENCY WISHES TO WITNESS THIS TESTING, ALL COSTS TO BE PAID BY CONTRACTOR.
- EXTERIOR, 1/8" ALUMINUM, AND INTERIOR 14 GA COLD ROLLED STEEL ELECTRICALLY WELDED AND REINFORCED WHERE REQUIRED.
- CONSTRUCTION WILL BE NEMA 3R, RAINTIGHT.
- ALL NUTS, BOLTS AND SCREWS WILL BE STAINLESS STEEL.
- NUTS, BOLTS AND SCREWS WILL NOT BE VISIBLE FROM OUTSIDE OF ENCLOSURE.
- NAMEPLATES WILL BE PROVIDED AS REQUIRED.
- CONTROL WIRING WILL BE MARKED AT BOTH ENDS BY PERMANENT WIRE MARKERS.
- A PLASTIC COVERED WIRING DIAGRAM WILL BE ATTACHED TO THE INSIDE OF THE FRONT DOOR.
- ENCLOSURE WILL BE FACTORY WIRED AND CONFORM TO REQUIRED NEMA STANDARDS.
- ANODIZE AFTER FABRICATION.

REV NO.	DATE	BY	APPR
1	3/06	RAW	AGE
2	2/07	RAW	AGE
3	8/08	RAW	AGE
4	1/15	RAW	CJC
5	7/18	RAW	CJC
6	9/21	RAW	CJC

PUBLIC WORKS – STREETS AND TRANSPORTATION

APPROVED BY: TRAFFIC ENGINEER MANAGER

APPROVED DATE: 9/1/2021

CITY OF Vancouver WASHINGTON

SERVICE ENCLOSURE REQURIEMENTS

STANDARD PLAN NUMBER

T20–41

I:\CITYAPPS\AUTOCAD\STD_DETAILS\DRAWING_FILES\T20–41

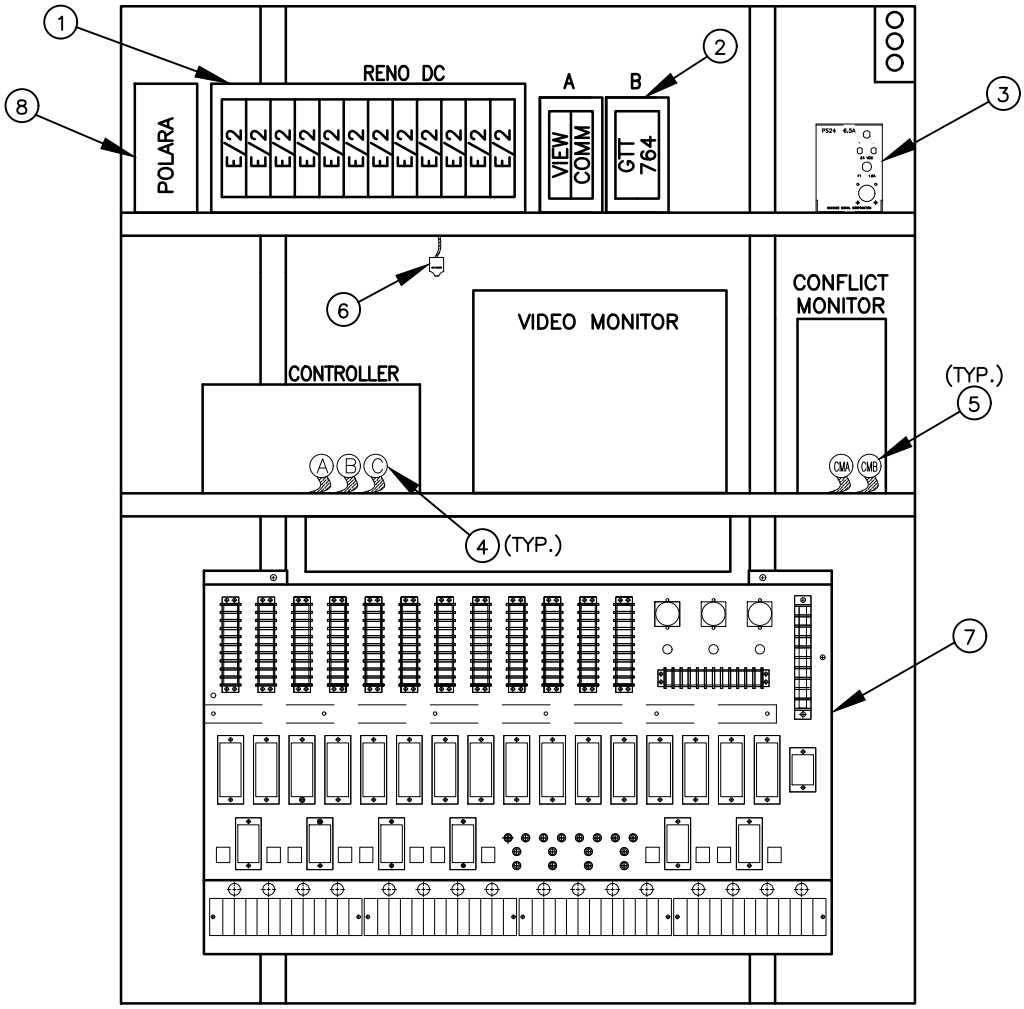

CABINET BACK NOTES:

1. CARD CAGE 1 SHALL BE WIRED FOR 48 CHANNELS OF LOOPS AND 4 CHANNELS OF OPTICOM HALF SIZE (E/2) 4 CHANNEL DETECTORS SHALL BE UTILIZED. ASSIGNMENT AND LAYOUT SHALL BE CONSISTENT WITH EXISTING COV STANDARDS. CC1 SHALL BE CASCADE SIGNAL CORP. PART NO. CSC# 1077 OR PRE-APPROVED EQUAL. FOR ADDITIONAL INFORMATION, SEE **DETECTION ASSIGNMENT FOR CARD CAGE, DETAIL T20-42E**.
2. CARD CAGE 2 SHALL BE WIRED FOR (2) TRAFFICON VIEWCOM/E MAX S VIDEO ENCODER. LABELING AND LAYOUT SHALL BE CONSISTENT WITH EXISTING COV STANDARDS. CC2 SHALL BE CASCADE SIGNAL CORP. PART NO. CSC# 1194 OR PRE-APPROVED EQUAL. FOR ADDITIONAL INFORMATION, SEE **DETECTION ASSIGNMENT FOR CARD CAGE, DETAIL T20-42E**.
3. SHELF MOUNT POWER SUPPLY SHALL BE PROVIDED RATED FOR A MINIMUM OF 150 WATTS. PIN ASSIGNMENT SHALL BE CONSISTENT WITH EXISTING COV STANDARDS. BANANA JACKS SHALL BE PROVIDED ON FRONT TO MEASURE VOLTAGE. POWER SUPPLY SHALL BE CASCADE SIGNAL CORP. PART NO. CSC# 1435 OR PRE-APPROVED EQUAL.
4. TS1, "A,B,C" CABLES.
5. MONITOR "A,B" CABLES.
6. 3-M MODEL #138 OPTICOM HARNESS.
7. THE LOAD BAY WIDTH SHALL NOT EXCEED 34" TO FACILITATE A NO INTERFERENCE SWING DOWN. ALL WIRING, WIRE COLORS AND TERMINAL BLOCK LAYOUT SHALL SHALL BE CONSISTENT WITH EXISTING COV STANDARDS. LOAD BAY SHALL INCLUDE THE WIRING TO MODIFY THE MMU/DOOR OPEN INTERLOCK, AND THE POLICE FLASH RESET. A RELAY SHALL BE PROVIDED WITH A LS 24VDC DISCONNECT TO PREVENT A CONTROLLER/FLASH SIMULTANEOUS DISPLAY. LOAD BAY SHALL BE CASCADE SIGNAL CORP. PART NO. CSC# 1000 OR PRE-APPROVED EQUAL.
8. POLARA APS NAVIGATOR CONTROL UNIT, PART# ICCU-S2 (OR APPROVED EQUAL).

REV NO.	DATE	BY	APPR
1	8/08	RAW	AGE
2	7/14	RAW	CJC
3	1/15	RAW	CJC
4	4/18	RAW	CJC
5	2/21	OIS	CJC
6	9/21	RAW	CJC

PUBLIC WORKS – STREETS AND TRANSPORTATION

APPROVED BY: TRAFFIC ENGINEER MANAGER

APPROVED DATE: 9/1/2021

CITY OF Vancouver WASHINGTON

TYPE "P" CABINET INTERIOR LAYOUT (BACK)

STANDARD PLAN NUMBER T20-42A

I:\CITYAPPS\AUTOCAD\STD_DETAILS\DRAWING_FILES\T20-42A

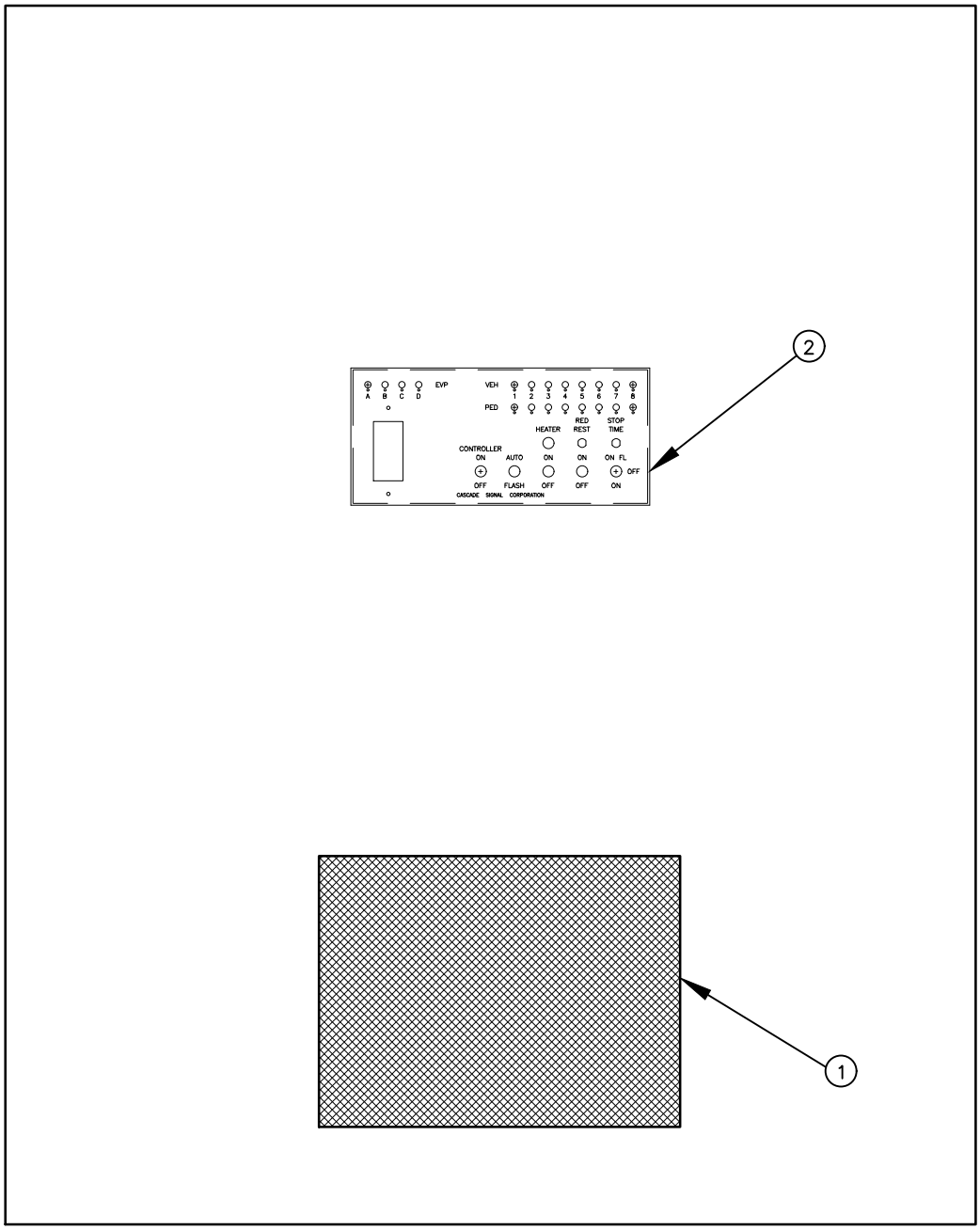

CABINET DOOR NOTES:

(1) A 12" X 16" DOOR FILTER SHALL BE PROVIDED.

(2) A CONTROL PANEL WITH THE FEATURES AS SHOWN SHALL BE PROVIDED. IT SHALL INCLUDE A FULL PLASTIC COVER THAT CAN BE HINGED UP. THE POLICE PANEL SHALL CONTAIN 1 PB SWITCH TO PUT THE CABINET IN FLASH. THIS ASSEMBLY SHALL BE CASCADE SIGNAL CORP. PART NO. CSC# 433 OR PRE-APPROVED EQUAL.

REV NO.	DATE	BY	APPR
1	8/04	RAW	AGE
2	3/06	RAW	AGE
3	2/07	RAW	AGE
4	8/08	RAW	AGE
5	1/15	RAW	CJC
6	9/21	RAW	CJC

PUBLIC WORKS – STREETS AND TRANSPORTATION

APPROVED BY: TRAFFIC ENGINEER MANAGER

APPROVED DATE: 9/1/2021

CITY OF Vancouver WASHINGTON

TYPE "P" CABINET INTERIOR LAYOUT (DOOR)

STANDARD PLAN NUMBER

T20-42B

I:\CITYAPPS\AUTOCAD\STD_DETAILS\DRAWING_FILES\T20-42B

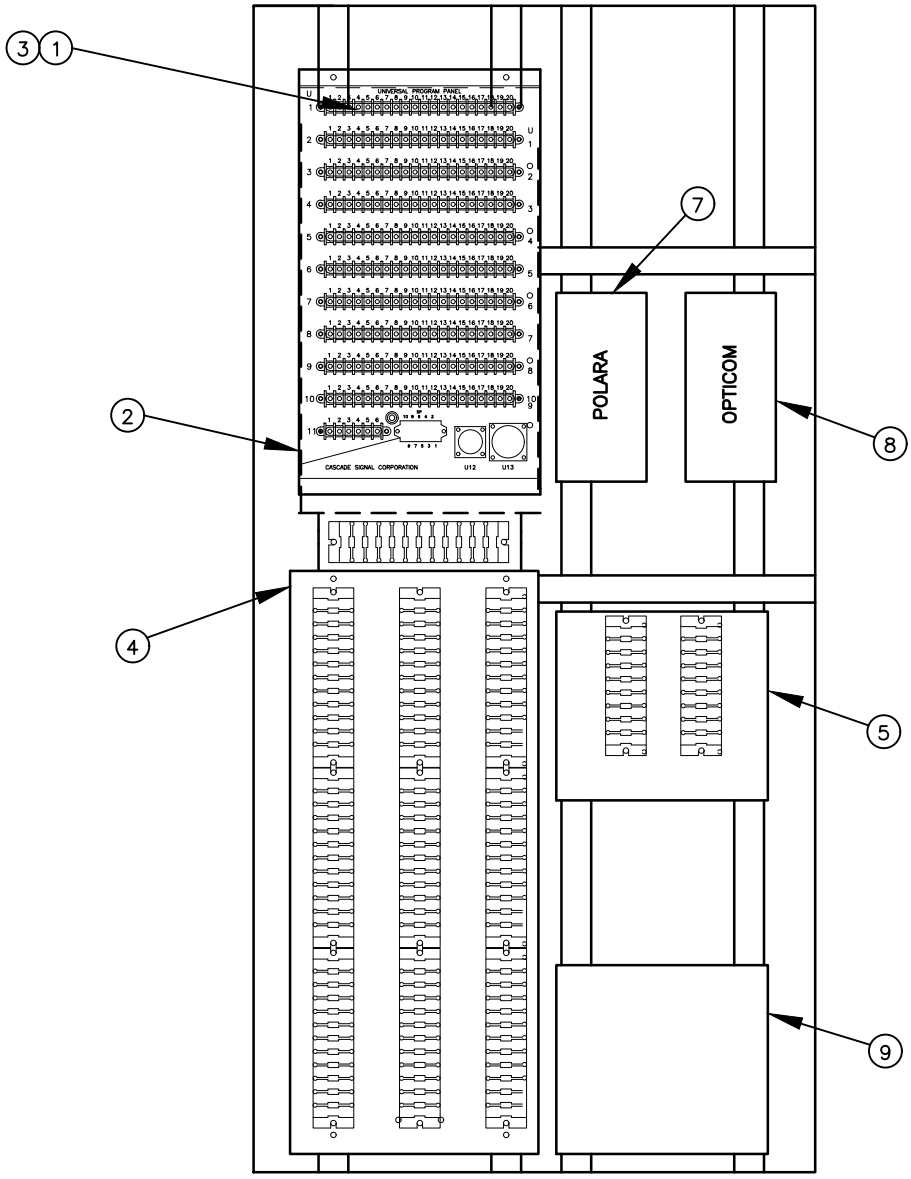

CABINET LEFT SIDE NOTES:

1. U PANEL TERMINAL ASSIGNMENT AND LAYOUT SHALL BE CONSISTENT WITH COV EXISTING STANDARDS. IT SHALL BE CASCADE SIGNAL CORP. PART NO. CSC# 1100 OR PRE-APPROVED EQUAL.
2. EDCO PC-642 SERIES SURGE SUPPRESSER SHALL BE AN INTEGRAL PART OF THE U PANEL.
3. THE U PANEL SHALL BE WIRED TO FUNCTION WITH ANY TYPE TS1 CONTROLLER.
4. DETECTOR FIELD TERMINATION PANEL SHALL HAVE 9 MARATHON 1600 SERIES TERMINAL BLOCKS, LAYOUT AND LABELED CONSISTENT WITH EXISTING COV STANDARDS. SEE **INPUT TERMINAL FOR "P" CABINET DETECTION PANEL ASSEMBLY, DETAIL T20-35A**.
5. OPTICOM FIELD TERMINATION PANEL SHALL HAVE 2 MARATHON 1600 SERIES TERMINAL BLOCKS, LAYOUT AND LABELED CONSISTANT WITH EXISTING COV STANDARDS. SEE **INPUT TERMINAL FOR "P" CABINET DETECTION PANEL ASSEMBLY, DETAIL T20-35A**.
6. NO PANELS ON THE SIDE SHALL INTERFERE WITH THE DROPPING DOWN OF THE LOAD BAY.
7. POLARA NAVIGATOR INTERCONNECT BOARD.
8. OPTICOM 768 AUXILIARY INTERFACE PANEL.
9. SPACE RESERVED FOR VIDEO DETECTION SURGE SUPPRESSORS.

REV NO.	DATE	BY	APPR
1	8/04	RAW	AGE
2	3/06	RAW	AGE
3	2/07	RAW	AGE
4	8/08	RAW	AGE
5	1/15	RAW	CJC
6	9/21	RAW	CJC

PUBLIC WORKS – STREETS AND TRANSPORTATION

APPROVED BY: TRAFFIC ENGINEER MANAGER

APPROVED DATE: 9/1/2021

CITY OF Vancouver WASHINGTON

TYPE "P" CABINET INTERIOR LAYOUT (LEFT SIDE)

STANDARD PLAN NUMBER

T20-42C

I:\CITYAPPS\AUTOCAD\STD_DETAILS\DRAWING_FILES\T20-42C

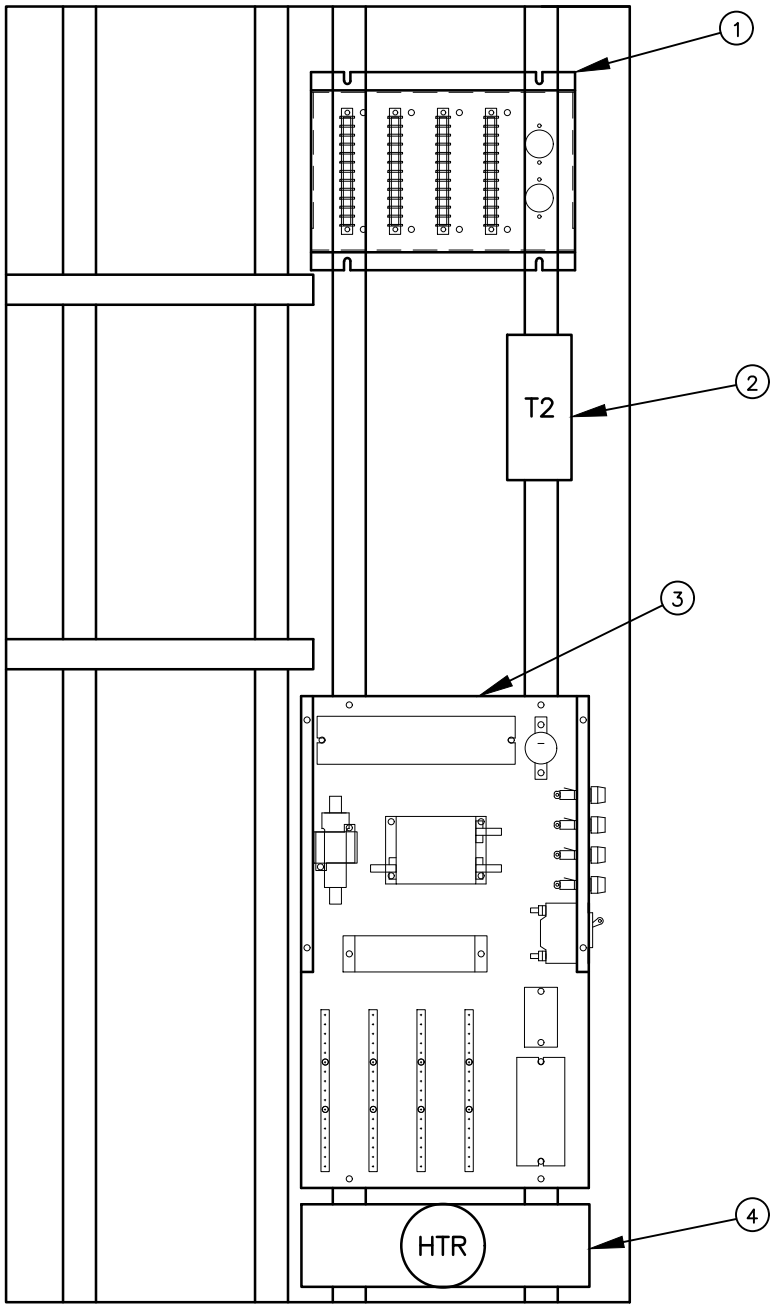

CABINET RIGHT SIDE NOTES:

1. A POWER SUPPLY PANEL SHALL BE PROVIDED FOR DISTRIBUTION TERMINATION OF THE POWER SUPPLY CABLE. IT SHALL ALSO CONTAIN PROVISIONS FOR ADDITION OF 2 – 8 PIN OCTAL OR 11 PIN RELAYS FOR FUTURE FUNCTIONS. IT SHALL BE CASCADE SIGNAL CORP. PART NO. CSC# 553 OR PRE–APPROVED EQUAL.
2. A THERMOSTAT TO CONTROL THE HEATER SHALL BE PROVIDED.
3. A POWER PANEL SHALL BE PROVIDED AND LAID OUT CONSISTENT WITH COV STANDARDS. CASCADE SIGNAL CORP. PART NO. CSC# 1602 OR PRE–APPROVED EQUAL.
4. A CABINET HEATER SHALL BE PROVIDED WITH A SCREW IN BASE.

REV NO.	DATE	BY	APPR
1	8/04	RAW	AGE
2	3/06	RAW	AGE
3	2/07	RAW	AGE
4	8/08	RAW	AGE
5	1/15	RAW	CJC
6	9/21	RAW	CJC

PUBLIC WORKS – STREETS AND TRANSPORTATION

APPROVED BY: TRAFFIC ENGINEER MANAGER

APPROVED DATE: 9/1/2021

CITY OF Vancouver WASHINGTON

TYPE "P" CABINET INTERIOR LAYOUT (RIGHT SIDE)

STANDARD PLAN NUMBER

T20–42D

I:\CITYAPPS\AUTOCAD\STD_DETAILS\DRAWING_FILES\T20–42D

NOTE:

CARD CAGE 1 USES 4-CHANNEL, SINGLE SLOT DETECTOR UNITS.
CARD CAGE 2 USES 4-CHANNEL, TWO SLOT VIDEO UNITS.
* UNASSIGNED ON U-PANEL.

P:\CITYAPPS\AUTOCAD\STD_DETAILS\DRAWING_FILES\T20-42E

REV NO.	DATE	BY	APPR
1	1/05	RAW	AGE
2	3/06	RAW	AGE
3	2/07	RAW	AGE
4	8/08	RAW	AGE
5	7/14	RAW	CJC
6	9/21	RAW	CJC

PUBLIC WORKS – STREETS AND TRANSPORTATION

APPROVED BY: TRAFFIC ENGINEER MANAGER

APPROVED DATE: 9/1/2021

CITY OF Vancouver WASHINGTON

TYPE "P" CABINET DETECTION ASSIGNMENTS FOR CARD CAGE

STANDARD PLAN NUMBER

T20-42E

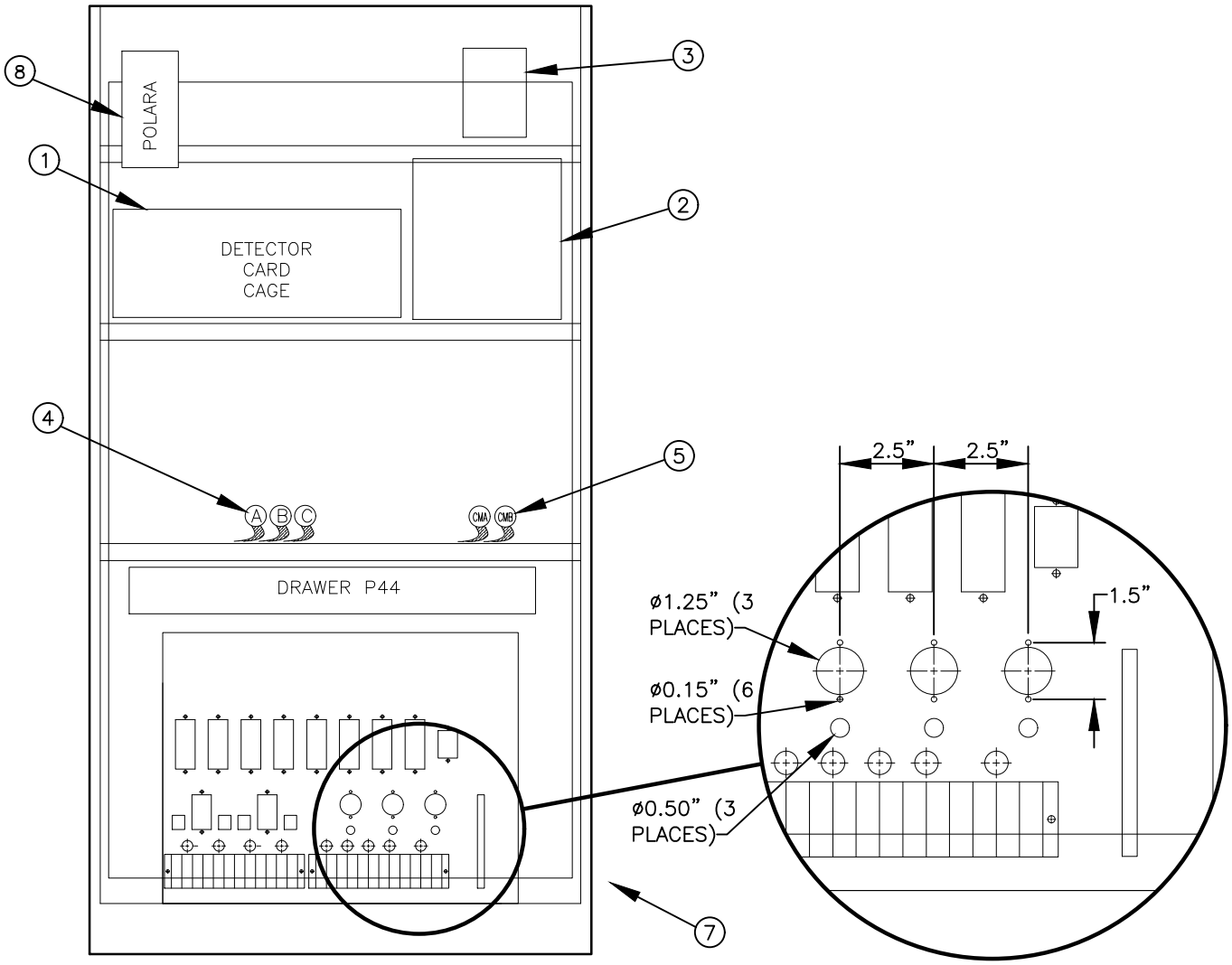

CABINET BACK NOTES:

1. THE CARD CAGE SHALL BE WIRED FOR 20 CHANNELS OF LOOPS, 8 CHANNELS OF VIDEO AND, 4 CHANNELS OF OPTICOM. HALF SIZE (E/2) 4 CHANNEL DETECTORS SHALL BE UTILIZED. ASSIGNMENT AND LAYOUT SHALL BE CONSISTENT WITH EXISTING COV STANDARDS. CC1 SHALL BE CASCADE SIGNAL CORP. PART NO. CSC# 1078 OR PRE–APPROVED EQUAL. FOR ADDITIONAL INFORMATION, SEE **TYPE "MSX" CABINET DETECTION ASSIGNMENTS FOR CARD CAGE, DETAIL T20–43E**.
2. SPACE FOR VIDEO MONITOR (OPTIONAL).
3. SHELF MOUNT POWER SUPPLY SHALL BE PROVIDED RATED FOR A MINIMUM OF 150 WATTS. PIN ASSIGNMENT SHALL BE CONSISTENT WITH EXISTING COV STANDARDS. BANANA JACKS SHALL BE PROVIDED ON FRONT TO MEASURE VOLTAGE. POWER SUPPLY SHALL BE CASCADE SIGNAL CORP. PART NO. CSC# 1435 OR PRE–APPROVED EQUAL.
4. TS1, "A,B,C" CABLES.
5. MONITOR "CMA, CMB" CABLES.
6. 3–M MODEL #138 OPTICOM HARNESS.
7. THE LOAD BAY WIDTH SHALL NOT EXCEED 21" TO FACILITATE A NO INTERFERENCE SWING DOWN. ALL WIRING, WIRE COLORS AND TERMINAL BLOCK LAYOUT SHALL SHALL BE CONSISTENT WITH EXISTING COV STANDARDS. LOAD BAY SHALL INCLUDE THE WIRING TO MODIFY THE MMU/DOOR OPEN INTERLOCK, AND THE POLICE FLASH RESET. A RELAY SHALL BE PROVIDED WITH A LS 24VDC DISCONNECT TO PREVENT A CONTROLLER/FLASH SIMULTANEOUS DISPLAY. LOAD BAY SHALL BE CASCADE SIGNAL CORP. PART NO. CSC# 1321 OR PRE–APPROVED EQUAL.
8. POLARA APS NAVIGATOR CONTROL UNIT, PART# ICCU–S2 (OR APPROVED EQUAL).

REV NO.	DATE	BY	APPR
1	3/06	RAW	AGE
2	2/07	RAW	AGE
3	8/08	RAW	AGE
4	1/15	RAW	CJC
5	2/21	OIS	CJC
6	9/21	RAW	CJC

PUBLIC WORKS – STREETS AND TRANSPORTATION

APPROVED BY: TRAFFIC ENGINEER MANAGER

APPROVED DATE: 9/1/2021

CITY OF Vancouver WASHINGTON

TYPE "MSX" CABINET INTERIOR LAYOUT (BACK)

STANDARD PLAN NUMBER

T20–43A

I:\CITYAPPS\AUTOCAD\STD_DETAILS\DRAWING_FILES\T20–43A

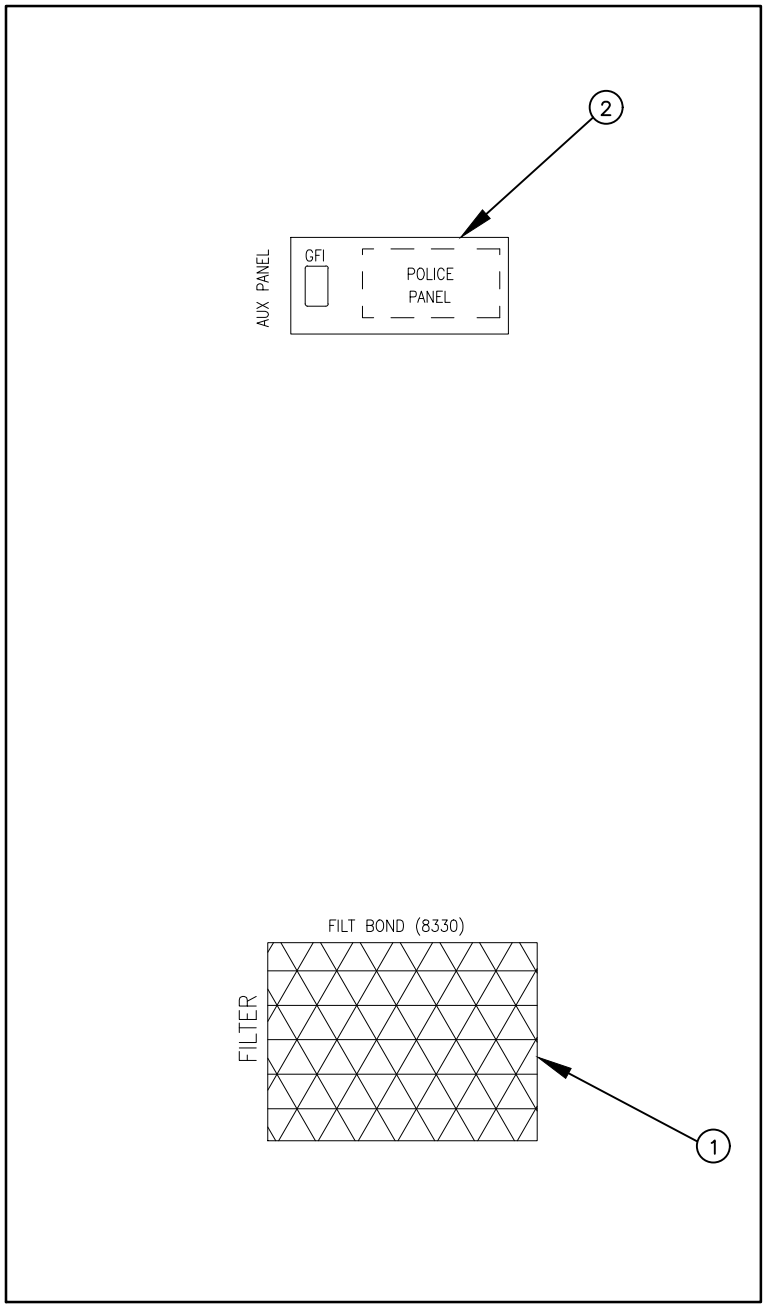

CABINET DOOR NOTES:

(1) A 12" X 16" DOOR FILTER SHALL BE PROVIDED.

(2) A CONTROL PANEL WITH THE FEATURES AS SHOWN SHALL BE PROVIDED. IT SHALL INCLUDE A FULL PLASTIC COVER THAT CAN BE HINGED UP. THE POLICE PANEL SHALL CONTAIN 1 PB SWITCH TO PUT THE CABINET IN FLASH. THIS ASSEMBLY SHALL BE CASCADE SIGNAL CORP. PART NO. CSC# 2094 OR PRE-APPROVED EQUAL.

REV NO.	DATE	BY	APPR
1	8/04	RAW	AGE
2	3/06	RAW	AGE
3	2/07	RAW	AGE
4	8/08	RAW	AGE
5	1/15	RAW	CJC
6	9/21	RAW	CJC

PUBLIC WORKS – STREETS AND TRANSPORTATION

APPROVED BY: TRAFFIC ENGINEER MANAGER

APPROVED DATE: 9/1/2021

CITY OF Vancouver WASHINGTON

TYPE "MSX" CABINET INTERIOR LAYOUT (DOOR)

STANDARD PLAN NUMBER

T20-43B

I:\CITYAPPS\AUTOCAD\STD_DETAILS\DRAWING_FILES\T20-43B

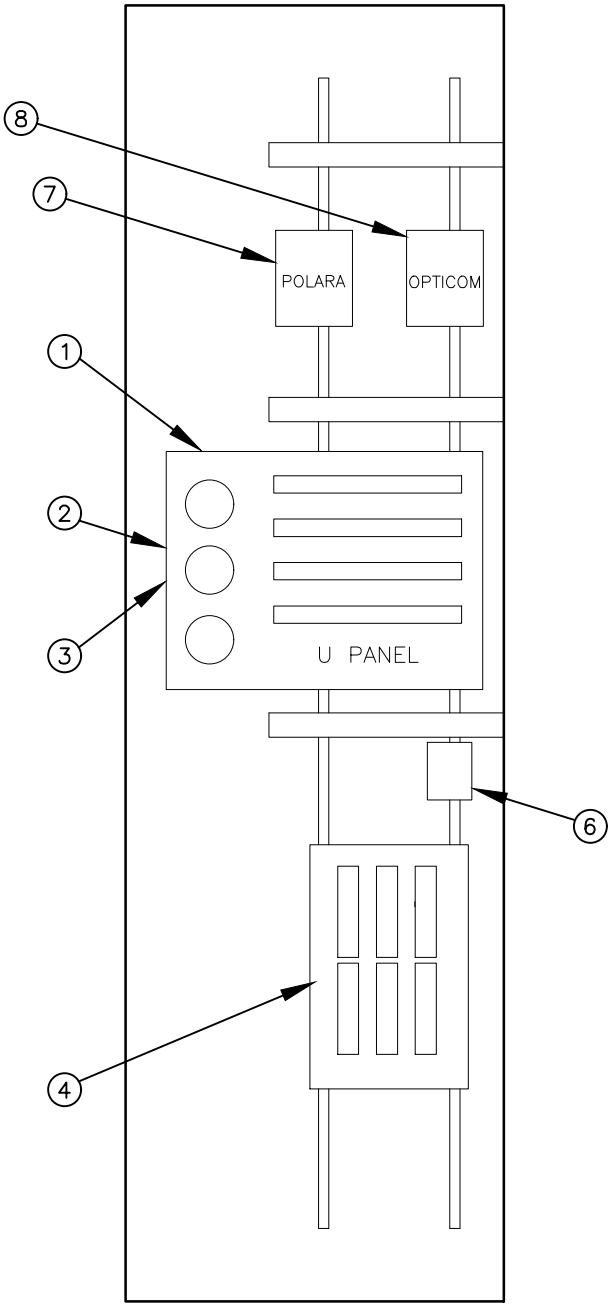

CABINET LEFT SIDE NOTES:

1. U PANEL TERMINAL ASSIGNMENT AND LAYOUT SHALL BE CONSISTENT WITH COV EXISTING STANDARDS. IT SHALL BE CASCADE SIGNAL CORP. PART NO. CSC# 1323 OR PRE-APPROVED EQUAL.
2. EDCO PC-642 SERIES SURGE SUPPRESSER SHALL BE AN INTEGRAL PART OF THE U PANEL.
3. THE U PANEL SHALL BE WIRED TO FUNCTION WITH ANY TYPE TS1 CONTROLLER.
4. DETECTOR FIELD TERMINATION PANEL SHALL HAVE 6 MARATHON 1600 SERIES TERMINAL BLOCKS, LAYOUT AND LABELED CONSISTENT WITH EXISTING COV STANDARDS. IT SHALL BE CASCADE SIGNAL CORP. PART NO. CSC# 1532. FOR ADDITIONAL INFORMATION, SEE **INPUT TERMINAL FOR "MSX" CABINET DETECTION PANEL ASSEMBLY, DETAIL T20-35B**.
5. NO PANELS ON THE SIDE SHALL INTERFERE WITH THE DROPPING DOWN OF THE LOAD BAY.
6. PROVISIONS SHALL BE PROVIDED TO MOUNT EDCO CX SERIES PROTECTORS FOR UP TO 6 VIDEO CAMERAS.
7. POLARA NAVIGATOR APS INTERCONNECT BOARD.
8. OPTICOM 768 AUXILARY INTERFACE PANEL.

REV NO.	DATE	BY	APPR
1	3/06	RAW	AGE
2	2/07	RAW	AGE
3	8/08	RAW	AGE
4	1/15	RAW	CJC
5	2/21	OIS	CJC
6	9/21	RAW	CJC

PUBLIC WORKS – STREETS AND TRANSPORTATION

APPROVED BY: TRAFFIC ENGINEER MANAGER

APPROVED DATE: 9/1/2021

CITY OF Vancouver WASHINGTON

TYPE "MSX" CABINET INTERIOR LAYOUT (LEFT SIDE)

STANDARD PLAN NUMBER

T20-43C

I:\CITYAPPS\AUTOCAD\STD_DETAILS\DRAWING_FILES\T20-43C

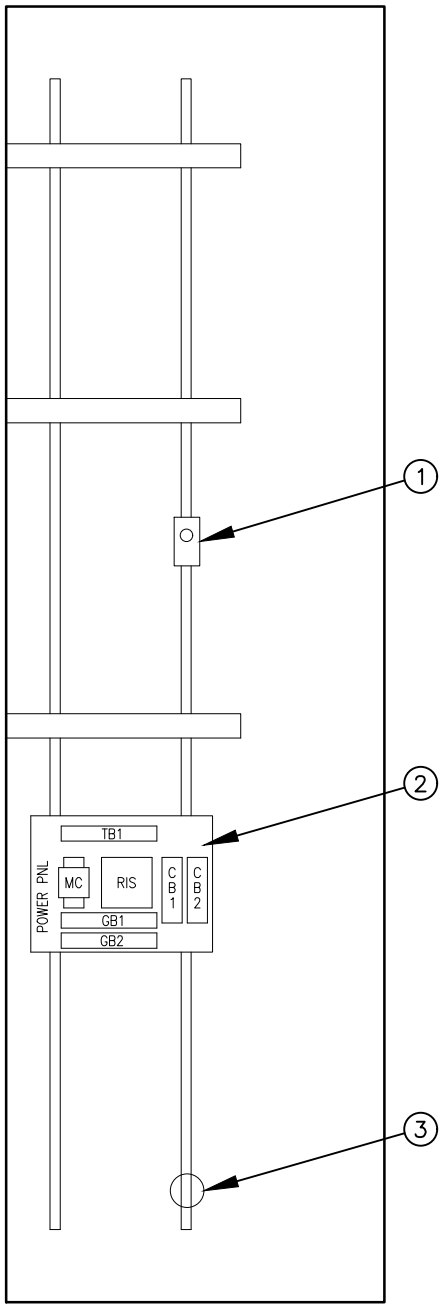

CABINET RIGHT SIDE NOTES:

1. A THERMOSTAT TO CONTROL THE HEATER SHALL BE PROVIDED.
2. A POWER PANEL SHALL BE PROVIDED AND LAID OUT CONSISTENT WITH COV STANDARDS. CASCADE SIGNAL CORP. PART NO. CSC# 2067 OR PRE-APPROVED EQUAL.
3. A CABINET HEATER SHALL BE PROVIDED WITH A SCREW IN BASE.

REV NO.	DATE	BY	APPR
1	8/04	RAW	AGE
2	3/06	RAW	AGE
3	2/07	RAW	AGE
4	8/08	RAW	AGE
5	1/15	RAW	CJC
6	9/21	RAW	CJC

PUBLIC WORKS – STREETS AND TRANSPORTATION

APPROVED BY: TRAFFIC ENGINEER MANAGER

APPROVED DATE: 9/1/2021

CITY OF Vancouver WASHINGTON

TYPE "MSX" CABINET INTERIOR LAYOUT (RIGHT SIDE)

STANDARD PLAN NUMBER

T20-43D

I:\CITYAPPS\AUTOCAD\STD_DETAILS\DRAWING_FILES\T20-43D

* UNASSIGNED ON U-PANEL.

REV NO.	DATE	BY	APPR
1	1/05	RAW	AGE
2	3/06	RAW	AGE
3	2/07	RAW	AGE
4	8/08	RAW	AGE
5	1/15	RAW	CJC
6	9/21	RAW	CJC

PUBLIC WORKS – STREETS AND TRANSPORTATION

APPROVED BY: TRAFFIC ENGINEER MANAGER

APPROVED DATE: 9/1/2021

CITY OF Vancouver WASHINGTON

TYPE "MSX" CABINET DETECTION ASSIGNMENTS FOR CARD CAGE

STANDARD PLAN NUMBER

T20-43E

P:\CITYAPPS\AUTOCAD\STD_DETAILS\DRAWING_FILES\T20-43E

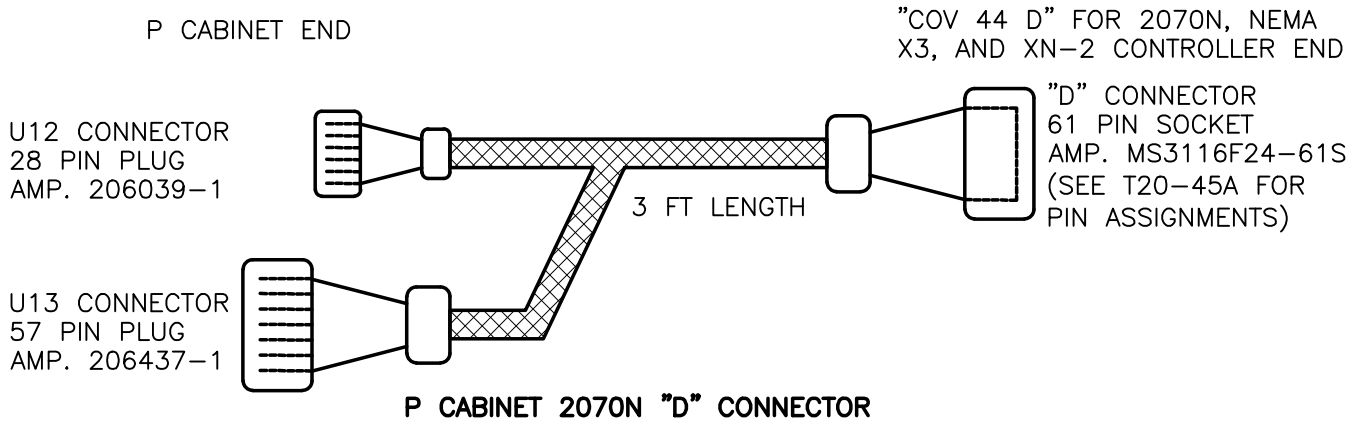

P CABINET 2070N "D" CONNECTOR

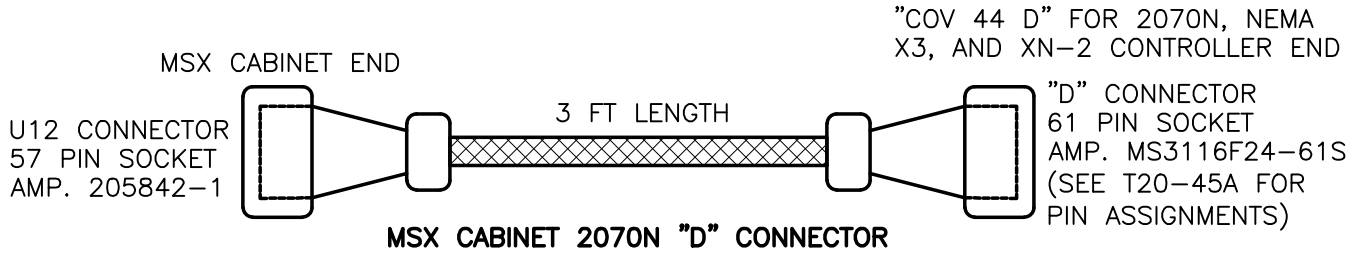

MSX CABINET 2070N "D" CONNECTOR

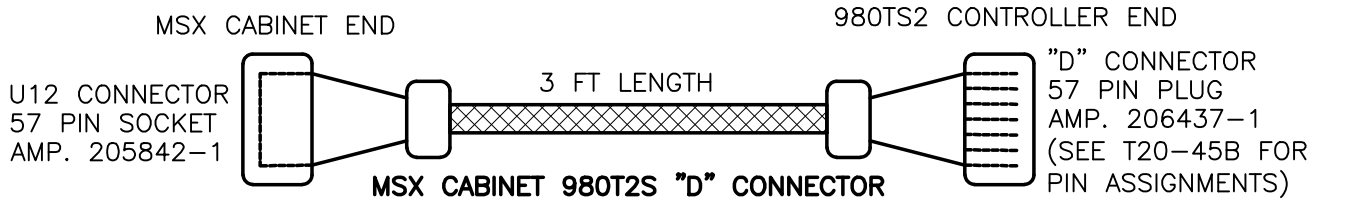

MSX CABINET 980T2S "D" CONNECTOR

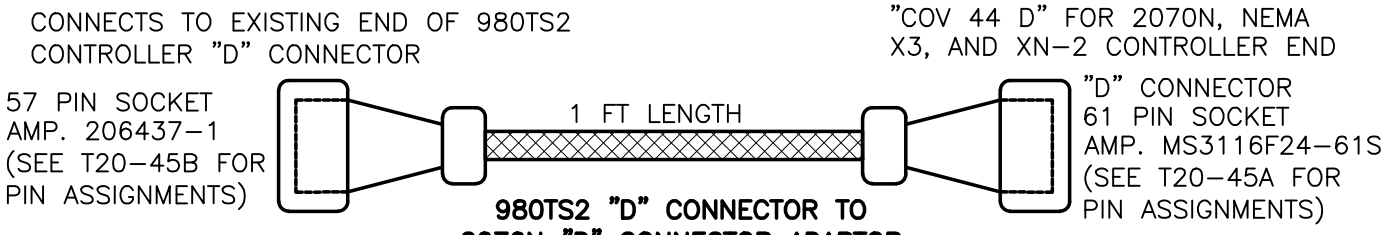

980TS2 "D" CONNECTOR TO 2070N "D" CONNECTOR ADAPTOR

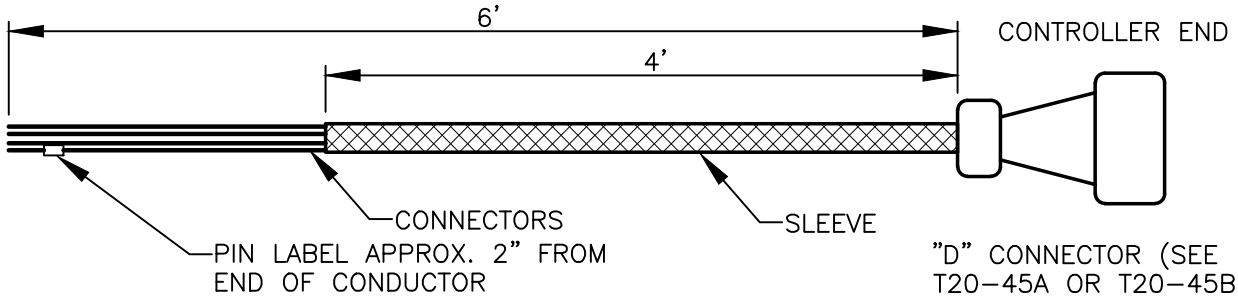

"D" CONNECTOR HARNESS

REV NO.	DATE	BY	APPR
1	1/05	RAW	AGE
2	3/06	RAW	AGE
3	2/07	RAW	AGE
4	8/08	RAW	AGE
5	1/15	RAW	CJC
6	9/21	RAW	CJC

PUBLIC WORKS – STREETS AND TRANSPORTATION

APPROVED BY: TRAFFIC ENGINEER MANAGER

APPROVED DATE: 9/1/2021

CITY OF Vancouver WASHINGTON

P CABINET AND MSX CABINET "D" CONNECTORS

STANDARD PLAN NUMBER

T20-44

I:\CITYAPPS\AUTOCAD\STD_DETAILS\DRAWING_FILES\T20-44

INPUTS

CABINET FUNCTION	PIN	SOFTWARE FUNCTION	CABINET
DETECTOR #15	A	VEHICLE CALL #9	P, MSX
DETECTOR #25	B	VEHICLE CALL #10	P, MSX
DETECTOR #35	C	VEHICLE CALL #11	P, MSX
DETECTOR #45	D	VEHICLE CALL #12	P, MSX
DETECTOR #55	E	VEHICLE CALL #13	P, MSX
DETECTOR #65	F	VEHICLE CALL #14	P, MSX
DETECTOR #75	G	VEHICLE CALL #15	P, MSX
DETECTOR #85	H	VEHICLE CALL #16	P, MSX
DETECTOR #11	J	VEHICLE CALL #17	P
DETECTOR #21	K	VEHICLE CALL #18	P, MSX
DETECTOR #31	L	VEHICLE CALL #19	P
DETECTOR #41	M	VEHICLE CALL #20	P, MSX
DETECTOR #51	N	VEHICLE CALL #21	P
DETECTOR #61	P	VEHICLE CALL #22	P, MSX
DETECTOR #71	R	VEHICLE CALL #23	P
DETECTOR #81	S	VEHICLE CALL #24	P, MSX
DETECTOR #12	T	VEHICLE CALL #25	P
DETECTOR #22	U	VEHICLE CALL #26	P, MSX
DETECTOR #32	V	VEHICLE CALL #27	P
DETECTOR #42	W	VEHICLE CALL #28	P, MSX
DETECTOR #52	X	VEHICLE CALL #29	P
MANUAL FREE	Y	FREE	P, MSX
DETECTOR #62	Z	VEHICLE CALL #30	P, MSX
DETECTOR #72	a	VEHICLE CALL #31	P
MMU FLASH	b	ALARM 2 **	P, MSX
DOOR AJAR	c	ALARM 3 **	P
DETECTOR #82	d	VEHICLE CALL #32	P, MSX
DETECTOR #23	e	VEHICLE CALL #33	P, MSX
DETECTOR #43	f	VEHICLE CALL #34	P, MSX
DETECTOR #63	g	VEHICLE CALL #35	P, MSX
DETECTOR #83	h	VEHICLE CALL #36	P, MSX
DETECTOR #24	i	VEHICLE CALL #37	P
DETECTOR #44	j	VEHICLE CALL #38	P
DETECTOR #64	k	VEHICLE CALL #39	P
DETECTOR #84	m	VEHICLE CALL #40	P
DETECTOR #26	n	VEHICLE CALL #41	P
DETECTOR #46	p	VEHICLE CALL #42	P
DETECTOR #66	q	VEHICLE CALL #43	P
BATTERY BACK-UP FLASH	r	ALARM 4 **	P
DETECTOR #86	s	VEHICLE CALL #44	P
R/R PRE-EMPT	t	PRE-EMPT 1 IN	P, MSX
POLICE FLASH	u	ALARM 1 **	P, MSX
PRE-EMPT A INPUT	v	PRE-EMPT 3 IN	P, MSX
PRE-EMPT B INPUT	w	PRE-EMPT 4 IN	P, MSX
PRE-EMPT C INPUT	x	PRE-EMPT 5 IN	P, MSX
PRE-EMPT D INPUT	y	PRE-EMPT 6 IN	P, MSX

OUTPUTS

CABINET FUNCTION	PIN	SOFTWARE FUNCTION	CABINET
PRE-EMPT C INDICATOR	z	PRE-EMPT STATUS 5	P, MSX
PRE-EMPT D INDICATOR	AA	PRE-EMPT STATUS 6	P, MSX
FUTURE USE	BB	**	P, MSX
FUTURE USE	CC	**	P, MSX
FUTURE USE	DD	**	P, MSX
FUTURE USE	EE	**	P, MSX
FUTURE USE	FF	**	P
FUTURE USE	GG	**	P
FUTURE USE	HH	**	P, MSX
PRE-EMPT A INDICATOR	JJ	PRE-EMPT STATUS 3	P, MSX
PRE-EMPT B INDICATOR	LL	PRE-EMPT STATUS 4	P, MSX
	KK	NOT USED	
	MM	NOT USED	
	NN	NOT USED	
	PP	NOT USED	

NOTES:

1. THE WIRING HARNESS AND CONNECTOR SHALL BE FULLY POPULATED.
2. CABINET FUNCTIONS DESIGNATED FOR FUTURE USE SHALL BE ASSIGNED AND IDENTIFIED ON THE PROJECT PLANS AND/OR IN THE SPECIAL PROVISIONS.

** TO BE DETERMINED.

"D" CONNECTOR
61 PIN SOCKET
AMP# MS3116F24-61S

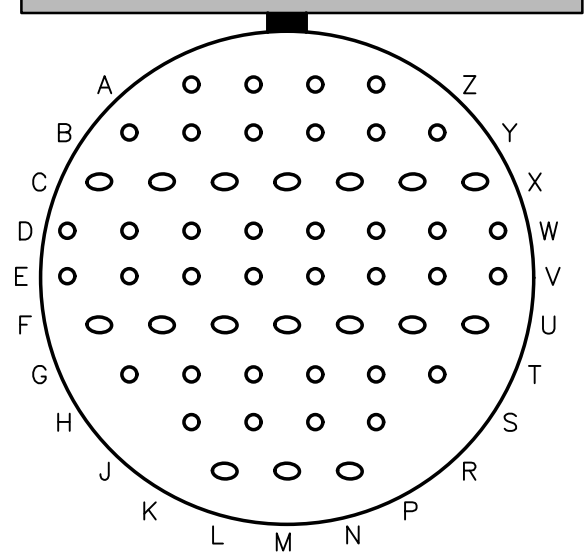

REV NO.	DATE	BY	APPR
1	1/05	RAW	AGE
2	3/06	RAW	AGE
3	2/07	RAW	AGE
4	8/08	RAW	AGE
5	1/15	RAW	CJC
6	9/21	RAW	CJC

PUBLIC WORKS – STREETS AND TRANSPORTATION

APPROVED BY: TRAFFIC ENGINEER MANAGER

APPROVED DATE: 9/1/2021

CITY OF Vancouver WASHINGTON

"COV 44 D" FOR 2070N, NEMA X3, AND XN-2 "D" CONNECTOR AND PIN ASSIGNMENTS

STANDARD PLAN NUMBER

T20-45A

I:\CITYAPPS\AUTOCAD\STD_DETAILS\DRAWING_FILES\T20-45A

INPUTS			
CABINET FUNCTION	PIN	SOFTWARE FUNCTION	CABINET
DETECTOR #15	57	VEHICLE CALL #9	P, MSX
DETECTOR #25	31	VEHICLE CALL #10	P, MSX
DETECTOR #35	32	VEHICLE CALL #11	P, MSX
DETECTOR #45	33	VEHICLE CALL #12	P, MSX
DETECTOR #55	30	VEHICLE CALL #13	P, MSX
DETECTOR #65	25	VEHICLE CALL #14	P, MSX
DETECTOR #75	21	VEHICLE CALL #15	P, MSX
DETECTOR #85	17	VEHICLE CALL #16	P, MSX
DETECTOR #11	13	VEHICLE CALL #17	P
DETECTOR #21	1	VEHICLE CALL #18	P, MSX
DETECTOR #31	6	VEHICLE CALL #19	P
DETECTOR #41	20	VEHICLE CALL #20	P, MSX
DETECTOR #51	5	VEHICLE CALL #21	P
DETECTOR #61	12	VEHICLE CALL #22	P, MSX
DETECTOR #71	11	VEHICLE CALL #23	P
DETECTOR #81	19	VEHICLE CALL #24	P, MSX
DETECTOR #12	26	VEHICLE CALL #25	P
DETECTOR #22	27	VEHICLE CALL #26	P, MSX
DETECTOR #32	28	VEHICLE CALL #27	P
DETECTOR #42	24	VEHICLE CALL #28	P, MSX
DETECTOR #52	23	VEHICLE CALL #29	P
MANUAL FREE	2	FREE	P, MSX
DETECTOR #62	15	VEHICLE CALL #30	P, MSX
DETECTOR #72	3	VEHICLE CALL #31	P
MMU FLASH	29	ALARM 2 **	P, MSX
DETECTOR #82	7	VEHICLE CALL #32	P, MSX
DETECTOR #23	36	VEHICLE CALL #33	P, MSX
DETECTOR #43	37	VEHICLE CALL #34	P, MSX
DETECTOR #63	38	VEHICLE CALL #35	P, MSX
DETECTOR #83	39	VEHICLE CALL #36	P, MSX
DETECTOR #24	40	VEHICLE CALL #37	P
DETECTOR #44	41	VEHICLE CALL #38	P
DETECTOR #64	14	VEHICLE CALL #39	P
DETECTOR #84	22	VEHICLE CALL #40	P
R/R PRE-EMPT	16	PRE-EMPT 1 IN	P, MSX
POLICE FLASH	18	ALARM 1 **	P, MSX
PRE-EMPT A INPUT	9	PRE-EMPT 3 IN	P, MSX
PRE-EMPT B INPUT	4	PRE-EMPT 4 IN	P, MSX
PRE-EMPT C INPUT	8	PRE-EMPT 5 IN	P, MSX
PRE-EMPT D INPUT	34	PRE-EMPT 6 IN	P, MSX

OUTPUTS			
CABINET FUNCTION	PIN	SOFTWARE FUNCTION	CABINET
PRE-EMPT C INDICATOR	49	PRE-EMPT STATUS 5	P, MSX
PRE-EMPT D INDICATOR	43	PRE-EMPT STATUS 6	P, MSX
FUTURE USE	45	**	P, MSX
FUTURE USE	52	**	P, MSX
FUTURE USE	46	**	P, MSX
FUTURE USE	47	**	P, MSX
FUTURE USE	50	NOT USED	P, MSX
PRE-EMPT A INDICATOR	56	PRE-EMPT STATUS 3	P, MSX
PRE-EMPT B INDICATOR	51	PRE-EMPT STATUS 4	P, MSX
NOT USED	10		
NOT USED	35		
NOT USED	42		
NOT USED	44		
AUX 1	48		
+24VDC	53		
LOGIC GND	54		
CHASSIS GND	55		

NOTES:

1. THE WIRING HARNESS AND CONNECTOR SHALL BE FULLY POPULATED.
2. CABINET FUNCTIONS DESIGNATED FOR FUTURE USE SHALL BE ASSIGNED AND IDENTIFIED ON THE PROJECT PLANS AND/OR IN THE SPECIAL PROVISIONS.

** TO BE DETERMINED.

"D" CONNECTOR
57 PIN PLUG
AMP# 206437-1

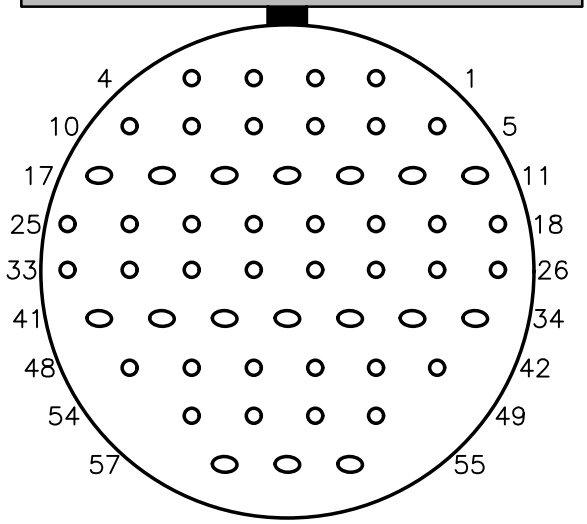

REV NO.	DATE	BY	APPR
1	1/05	RAW	AGE
2	3/06	RAW	AGE
3	2/07	RAW	AGE
4	8/08	RAW	AGE
5	1/15	RAW	CJC
6	9/21	RAW	CJC

PUBLIC WORKS – STREETS AND TRANSPORTATION

APPROVED BY: TRAFFIC ENGINEER MANAGER

APPROVED DATE: 9/1/2021

CITY OF Vancouver WASHINGTON

980ATC T2 "D" CONNECTOR AND PIN ASSIGNMENTS

STANDARD PLAN NUMBER

T20-45B

I:\CITYAPPS\AUTOCAD\STD_DETAILS\DRAWING_FILES\T20-45B

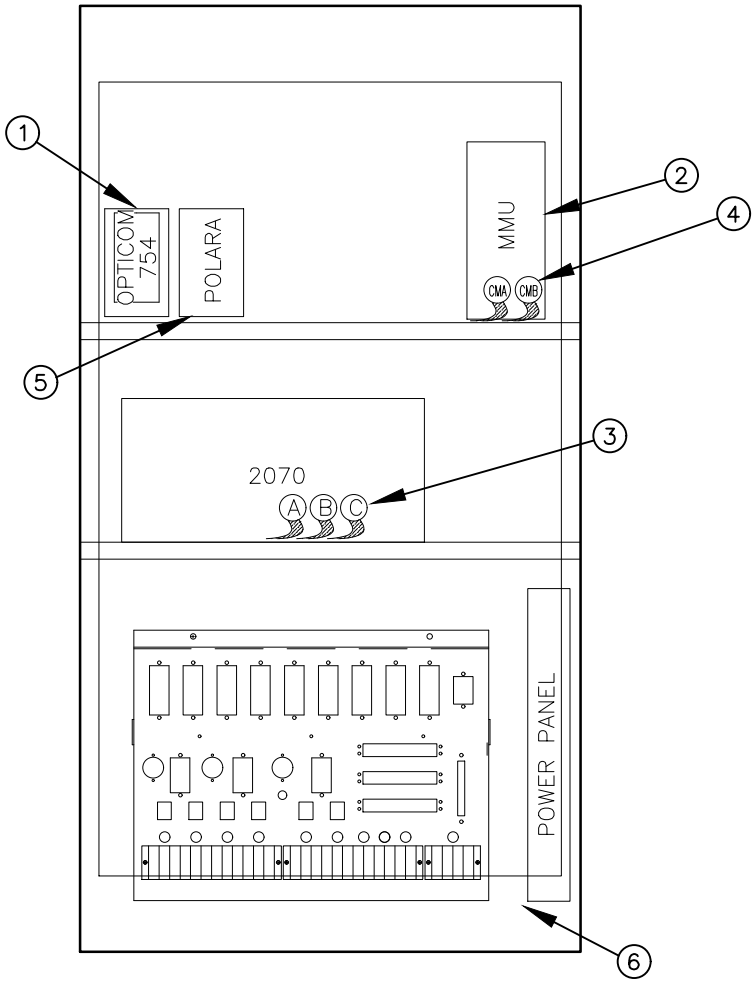

CABINET BACK NOTES:

1. THE CARD CAGE SHALL BE WIRED FOR 4 CHANNELS OF OPTICOM. ASSIGNMENT AND LAYOUT SHALL BE CONSISTENT WITH EXISTING COV STANDARDS. CC1 SHALL BE CASCADE SIGNAL CORP. PART NO. CSC# 1078 OR PRE-APPROVED EQUAL. FOR ADDITIONAL INFORMATION, SEE **TYPE "M" CABINET HAWK SIGNAL DETECTION ASSIGNMENTS FOR CARD CAGE, DETAIL T20-46E**.
2. SPACE FOR MALFUNCTION MONITOR UNIT.
3. TS1, "A,B,C" CABLES.
4. MONITOR "CMA, CMB" CABLES.
5. POLARA APS NAVIGATOR CONTROL UNIT, PART# ICCU-S2 (OR APPROVED EQUAL).
6. THE LOAD BAY WIDTH SHALL NOT EXCEED 21" TO FACILITATE A NO INTERFERENCE SWING DOWN. ALL WIRING, WIRE COLORS AND TERMINAL BLOCK LAYOUT SHALL SHALL BE CONSISTENT WITH EXISTING COV HAWK STANDARDS. LOAD BAY SHALL INCLUDE THE WIRING TO MODIFY THE MMU/DOOR OPEN INTERLOCK, AND THE POLICE FLASH RESET. A RELAY SHALL BE PROVIDED WITH A LS 24VDC DISCONNECT TO PREVENT A CONTROLLER/FLASH SIMULTANEOUS DISPLAY. LOAD BAY SHALL BE CASCADE SIGNAL CORP. PART NO. CSC# 1321 OR PRE-APPROVED EQUAL.

REV NO.	DATE	BY	APPR
1	7/14	RAW	CJC
2	2/21	OIS	AGE
3	9/21	RAW	CJC

PUBLIC WORKS – STREETS AND TRANSPORTATION

APPROVED BY: TRAFFIC ENGINEER MANAGER

APPROVED DATE: 9/1/2021

CITY OF Vancouver WASHINGTON

TYPE "M" HAWK SIGNAL CABINET INTERIOR LAYOUT (BACK)

STANDARD PLAN NUMBER

T20-46A

I:\CITYAPPS\AUTOCAD\STD_DETAILS\DRAWING_FILES\T20-46A

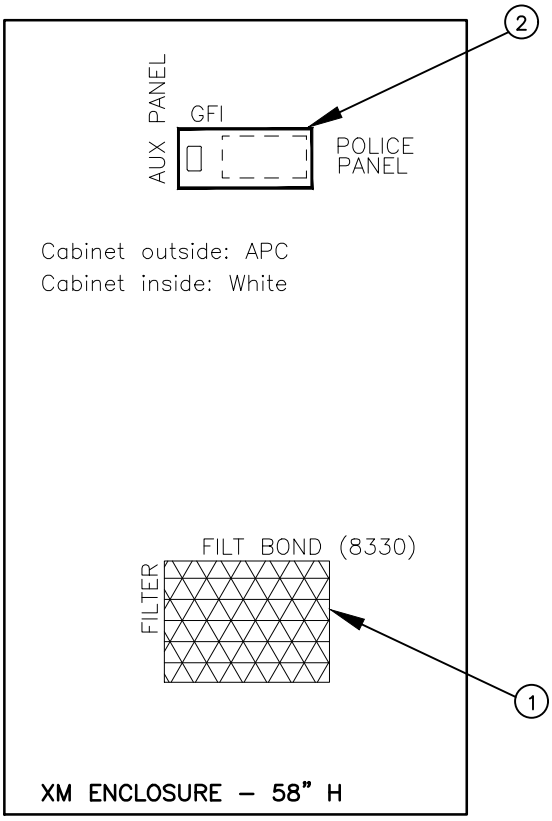

CABINET DOOR NOTES:

1. A 12" X 16" DOOR FILTER SHALL BE PROVIDED.
2. A CONTROL PANEL WITH THE FEATURES AS SHOWN SHALL BE PROVIDED. IT SHALL INCLUDE A FULL PLASTIC COVER THAT CAN BE HINGED UP. THE POLICE PANEL SHALL CONTAIN 1 PB SWITCH TO PUT THE CABINET IN FLASH. THIS ASSEMBLY SHALL BE CASCADE SIGNAL CORP. PART NO. CSC# 2094 OR PRE–APPROVED EQUAL.

REV NO.	DATE	BY	APPR
1	7/14	RAW	CJC
2	2/21	OIS	AGE
3	9/21	RAW	CJC

PUBLIC WORKS – STREETS AND TRANSPORTATION

APPROVED BY: TRAFFIC ENGINEER MANAGER

APPROVED DATE: 9/1/2021

CITY OF Vancouver WASHINGTON

TYPE "M" HAWK SIGNAL CABINET INTERIOR LAYOUT (DOOR)

STANDARD PLAN NUMBER

T20–46B

I:\CITYAPPS\AUTOCAD\STD_DETAILS\DRAWING_FILES\T20–46B

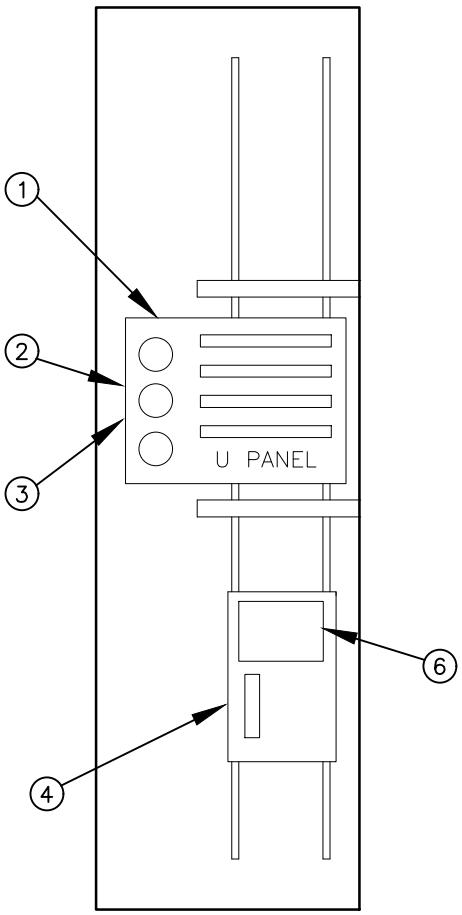

CABINET LEFT SIDE NOTES:

1. U PANEL TERMINAL ASSIGNMENT AND LAYOUT SHALL BE CONSISTENT WITH COV EXISTING STANDARDS. IT SHALL BE CASCADE SIGNAL CORP. PART NO. CSC# 1323 OR PRE-APPROVED EQUAL.
2. EDCO PC-642 SERIES SURGE SUPPRESSER SHALL BE AN INTEGRAL PART OF THE U PANEL.
3. THE U PANEL SHALL BE WIRED TO FUNCTION WITH ANY TYPE TS1 CONTROLLER.
4. DETECTOR FIELD TERMINATION PANEL SHALL HAVE 2 MARATHON 1600 SERIES TERMINAL BLOCKS, LAYOUT AND LABELED CONSISTENT WITH EXISTING COV HAWK STANDARDS. IT SHALL BE CASCADE SIGNAL CORP. PART NO. CSC# 1532. FOR ADDITIONAL INFORMATION, SEE **INPUT TERMINAL FOR "M" CABINET HAWK DETECTION PANEL ASSEMBLY, DETAIL T20-46E**.
5. NO PANELS ON THE SIDE SHALL INTERFERE WITH THE DROPPING DOWN OF THE LOAD BAY.
6. POLARA NAVIGATOR APS INTERCONNECT BOARD.

REV NO.	DATE	BY	APPR
1	7/14	RAW	CJC
2	2/21	OIS	AGE
3	9/21	RAW	CJC

PUBLIC WORKS – STREETS AND TRANSPORTATION

APPROVED BY: TRAFFIC ENGINEER MANAGER

APPROVED DATE: 9/1/2021

CITY OF Vancouver WASHINGTON

TYPE "M" HAWK SIGNAL CABINET INTERIOR LAYOUT (LEFT SIDE)

STANDARD PLAN NUMBER

T20-46C

I:\CITYAPPS\AUTOCAD\STD_DETAILS\DRAWING_FILES\T20-46C

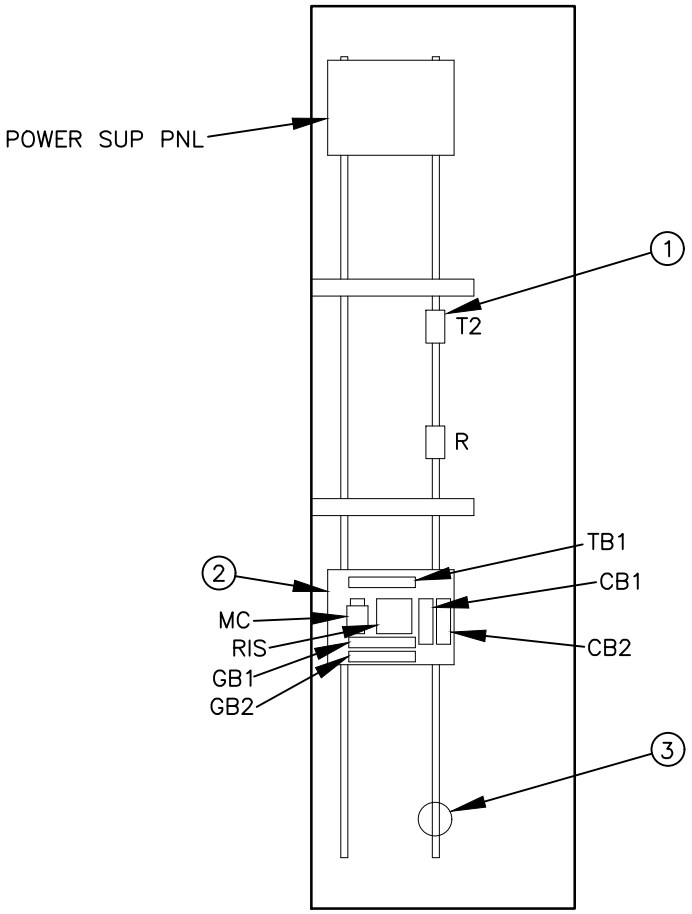

CABINET RIGHT SIDE NOTES:

1. A THERMOSTAT TO CONTROL THE HEATER SHALL BE PROVIDED.
2. A POWER PANEL SHALL BE PROVIDED AND LAID OUT CONSISTENT WITH COV STANDARDS. CASCADE SIGNAL CORP. PART NO. CSC# 2067 OR PRE-APPROVED EQUAL.
3. A CABINET HEATER SHALL BE PROVIDED WITH A SCREW IN BASE.

REV NO.	DATE	BY	APPR
1	7/14	RAW	CJC
2	9/21	RAW	AGE

PUBLIC WORKS – STREETS AND TRANSPORTATION

APPROVED BY: TRAFFIC ENGINEER MANAGER

APPROVED DATE: 9/1/2021

CITY OF Vancouver WASHINGTON

TYPE "M" HAWK SIGNAL CABINET INTERIOR LAYOUT (RIGHT SIDE)

STANDARD PLAN NUMBER

T20-46D

I:\CITYAPPS\AUTOCAD\STD_DETAILS\DRAWING_FILES\T20-46D

CARD CAGE 1

* UNASSIGNED ON U-PANEL.

REV NO.	DATE	BY	APPR
1	7/14	RAW	CJC
2	9/21	RAW	AGE

PUBLIC WORKS – STREETS AND TRANSPORTATION

APPROVED BY: TRAFFIC ENGINEER MANAGER

APPROVED DATE: 9/1/2021

CITY OF Vancouver WASHINGTON

TYPE "M" HAWK SIGNAL CABINET DETECTION ASSIGNMENTS FOR CARD CAGE

STANDARD PLAN NUMBER

T20-46E

I:\CITYAPPS\AUTOCAD\STD_DETAILS\DRAWING_FILES\T20-46E

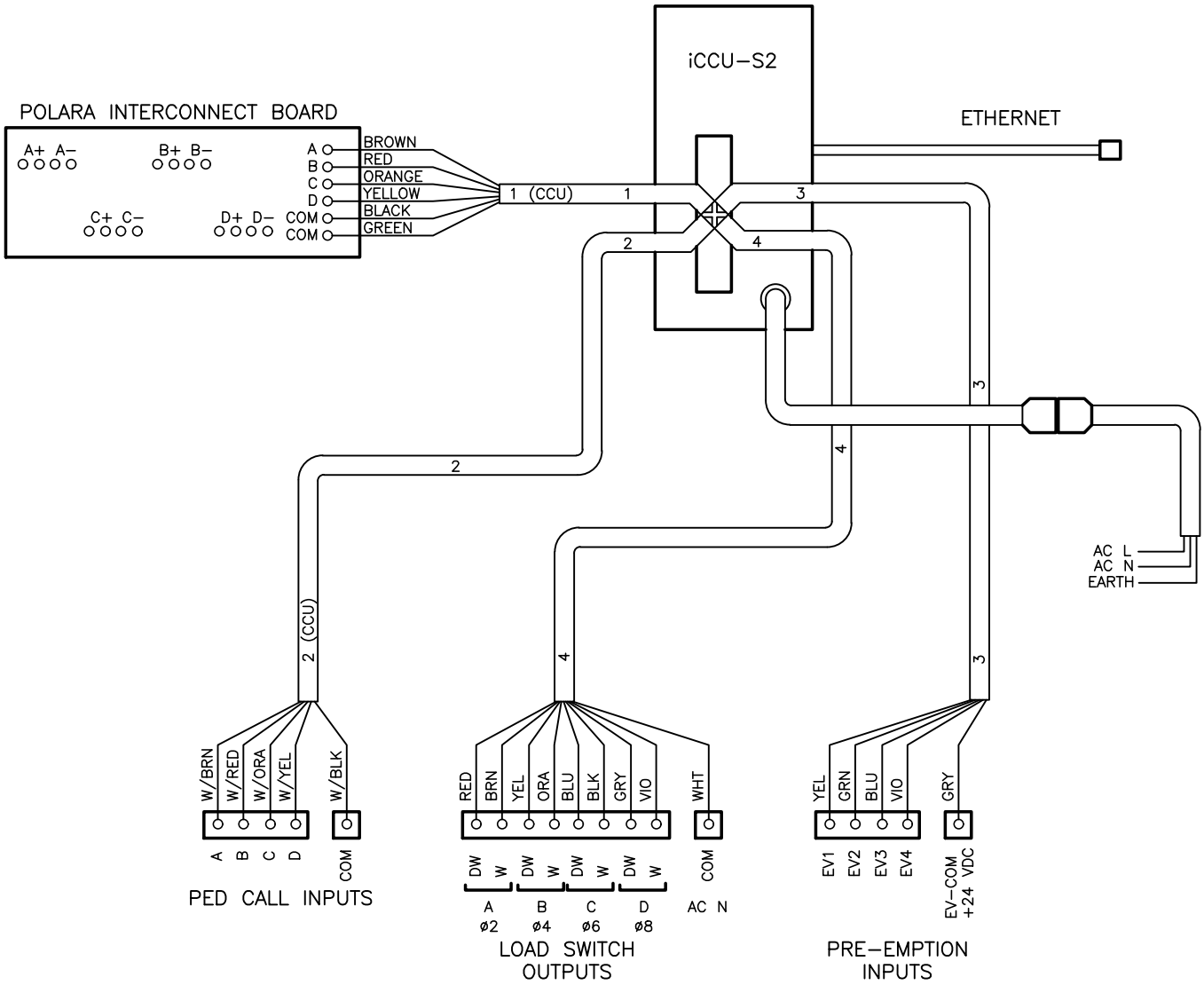

REV NO.	DATE	BY	APPR
1	1/15	RAW	CJC
2	2/21	OIS	AGE
3	9/21	RAW	CJC

PUBLIC WORKS – STREETS AND TRANSPORTATION

APPROVED BY: TRAFFIC ENGINEER MANAGER

APPROVED DATE: 9/1/2021

CITY OF Vancouver WASHINGTON

POLARA APS NAVIGATOR INTERCONNECT BOARD AND WIRING HARNESS

STANDARD PLAN NUMBER

T20–47

I:\CITYAPPS\AUTOCAD\STD_DETAILS\DRAWING_FILES\T20–47

I:\CITYAPPS\AUTOCAD\STD_DETAILS\DRAWING_FILES\T21-01A

CITY OF VANCOUVER STREET LIGHT REQUIREMENTS **LUMINANCE METHOD (Straight Sections)**	Roadway Classification																Lighting District					
	Principal Arterial				Minor Arterial			Collector Arterial			Industrial			Local Access			Downtown	Uptown	Promenade Roadway	Promenade Pathway	Historical District/Officer's Row Roadway	Historical District/Officer's Row Pathway
	Expressway	Major									Primary	Primary	Secondary									
Pedestrian Conflict (10)	All	High	Medium	Low	High	Medium	Low	High	Medium	Low	High	High	Medium	Medium	Low	Low	All	All	All	All	All	All
Applicable Street Sections Standard Details	N/A	T10-04 T10-05	T10-06	T10-07	T10-08	T10-09 T10-10	T10-11	T10-12	T10-13	T10-14	T10-20	T10-21	T10-22 T10-23	T10-15A	T10-15B	As Directed	As Directed	As Directed	As Directed	As Directed	As Directed	As Directed
Averaged Maintained Luminance (2) (3)	1.0	1.2	0.9	0.6	1.0	0.8	0.6	0.8	0.6	0.4	1.2	1.2	1.0	0.5	0.3	0.3	1.2	1.2	1.0	0.9	1.0	0.9
Luminance Unformity (4) — Average to Minimum	3:1	3:1	3:1	3:1	3:1	3:1	3:1	3:1	3:1	4:1	3:1	3:1	3:1	6:1	6:1	6:1	3:1	3:1	3:1	4:1	3:1	4:1
Luminance Unformity (4) — Maximum to Minimum	5:1	5:1	5:1	6:1	5:1	5:1	6:1	5:1	6:1	8:1	5:1	5:1	5:1	10:1	10:1	10:1	5:1	5:1	5:1	8:1	5:1	8:1
Max. Veiling Luminance Ratio — LVmax to Laverage	0.3	0.3	0.3	0.3	0.3	0.3	0.3	0.4	0.4	0.4	0.3	0.3	0.3	0.4	0.4	0.4	3:1	3:1	3:1	4:1	3:1	4:1
Maximum Pole Spacing (5) (6)	N/A	170	160	185	165	175	180	160	180	160	170	180	180	160	275	130	90	90	100	120	90	120
Light Standard Types Approved for Use (7)	Design Required	A	A	A	A	A	A	A	A	A	A	A	A	A	A	D**	D	D	P	R	O	O
Luminaire	SEE CITY'S APPROVED PRODUCTS LIST																					
Fixtures Mounting Height (nominal in feet) (8)	Design Required	30	30	30	30	30	30	30	30	30	30	30	30	25	25	20	21	20	20	14	20	14
One Side or Both Sides Lighting Applicable (9)	Both Sides	Both Sides	Both Sides	Both Sides	Both Sides	Both Sides	Both Sides	Both Sides *	Both Sides *	Both Sides *	Both Sides *	Both Sides* *	Both Sides *	Both Sides *	Both Sides *	Both Sides *	Both Sides	Both Sides	One Side Both Sides	One Side	One Side Both Sides	One Side
Light Source (7)	As Directed	LED	LED	LED	LED	LED	LED	LED	LED	LED	LED	LED	LED	LED	LED	As Directed	As Directed	As Directed	As Directed	As Directed	As Directed	As Directed
Lamp Lumen Depreciation (LLD)	0.95	0.95	0.95	0.95	0.95	0.95	0.95	0.95	0.95	0.95	0.95	0.95	0.95	0.95	0.95	As Directed	As Directed	As Directed	As Directed	As Directed	As Directed	As Directed
Lumen Dirt Depreciation (LDD)	0.90	0.90	0.90	0.90	0.90	0.90	0.90	0.90	0.90	0.90	0.90	0.90	0.90	0.95	0.95	As Directed	As Directed	As Directed	As Directed	As Directed	As Directed	As Directed
Light Distribution	Design Required	3	3	2	3	2	2	2	2	2	3	3	2	2	2	As Directed	As Directed	As Directed	As Directed	As Directed	As Directed	As Directed

*Both Sides Staggered Preferred Unless Only Half Street is Improved.

**Use Type D Lighting Standard in all Residential Areas Unless the Surrounding Neighborhood is Either Type A or Type N or as Directed by Engineer.

SEE T21-01D FOR (#) NOTE INFORMATION.

REV NO.	DATE	BY	APPR
1	1/15	RAW	CJC
2	7/19	RAW	CJC
3	9/21	RAW	CJC

PUBLIC WORKS – STREETS AND TRANSPORTATION

APPROVED BY: TRAFFIC ENGINEER MANAGER

APPROVED DATE: 9/1/2021

CITY OF Vancouver WASHINGTON

CITY STREET LIGHTING REQUIREMENTS SCHEDULE LUMINANCE METHOD (STRAIGHT SECTIONS)

STANDARD PLAN NUMBER T21-01A

I:\CITYAPPS\AUTOCAD\STD_DETAILS\DRAWING_FILES\T21-01B

CITY OF VANCOUVER STREET LIGHT REQUIREMENTS **ILLUMINANCE METHOD (Curved Sections)**	Roadway Classification																Lighting District					
	Principal Arterial				Minor Arterial			Collector Arterial			Industrial			Local Access			Downtown	Uptown	Promenade Roadway	Promenade Pathway	Historical District/Officer's Row Roadway	Historical District/Officer's Row Pathway
	Expressway	Major									Primary	Primary	Secondary									
Pedestrian Conflict (10)	All	High	Medium	Low	High	Medium	Low	High	Medium	Low	High	High	Medium	Medium	Low	Low	All	All	All	All	All	All
Applicable Street Sections Standard Details	N/A	T10-04 T10-05	T10-06	T10-07	T10-08	T10-09 T10-10	T10-11	T10-12	T10-13	T10-14	T10-20	T10-21	T10-22 T10-23	T10-15A	T10-15B	As Directed	As Directed	As Directed	As Directed	As Directed	As Directed	As Directed
Averaged Maintained Illuminance (2) (3)	1.5	1.8	1.3	0.9	1.5	1.2	0.9	1.2	0.9	0.6	1.8	1.8	1.5	0.7	0.4	0.4	1.8	1.8	1.5	1.3	1.5	1.3
Illuminance Unformity (4) Average to Minimum	3:1	3:1	3:1	3:1	3:1	3:1	3:1	4:1	4:1	4:1	3:1	3:1	3:1	6:1	6:1	6:1	3:1	3:1	3:1	4:1	3:1	4:1
Light Standard Types Approved for Use (7)	Design Required	A	A	A	A	A	A	A	A	A	A	A	A	A	A	D**	D	D	P	R	O	O
Fixtures Mounting Height (nominal in feet) (8)	Design Required	30	30	30	30	30	30	30	30	30	30	30	30	25	25	20	20	20	20	14	20	14
One Side or Both Sides Lighting Applicable (9)	Both Sides	Both Sides	Both Sides	Both Sides	Both Sides	Both Sides	Both Sides	Both Sides *	Both Sides *	Both Sides *	Both Sides *	Both Sides *	Both Sides *	Both Sides *	Both Sides *	Both Sides *	Both Sides	Both Sides	One Side Both Sides	One Side	One Side Both Sides	One Side
Luminaire	SEE CITY'S APPROVED PRODUCTS LIST																					
Light Source (7)	As Directed	LED	LED	LED	LED	LED	LED	LED	LED	LED	LED	LED	LED	LED	LED	As Directed	As Directed	As Directed	As Directed	As Directed	As Directed	As Directed
Lamp Lumen Depreciation (LLD)	0.95	0.95	0.95	0.95	0.95	0.95	0.95	0.95	0.95	0.95	0.95	0.95	0.95	0.95	0.95	As Directed	As Directed	As Directed	As Directed	As Directed	As Directed	As Directed
Lumen Dirt Depreciation (LDD)	0.90	0.90	0.90	0.90	0.90	0.90	0.90	0.90	0.90	0.90	0.90	0.90	0.90	0.95	0.95	As Directed	As Directed	As Directed	As Directed	As Directed	As Directed	As Directed
Light Distribution	As Directed	3	3	2	3	2	2	2	2	2	3	3	2	2	2	As Directed	As Directed	As Directed	As Directed	As Directed	As Directed	As Directed

*Both Sides Staggered Preferred Unless Only Half Street is Improved.

**Use Type D Lighting Standard in all Residential Areas Unless the Surrounding Neighborhood is Either Type A or Type N or as Directed by Engineer.

SEE T21-01D FOR (#) NOTE INFORMATION.

REV NO.	DATE	BY	APPR
1	1/15	RAW	CJC
2	7/19	RAW	CJC
3	9/21	RAW	CJC

PUBLIC WORKS – STREETS AND TRANSPORTATION

APPROVED BY: TRAFFIC ENGINEER MANAGER

APPROVED DATE: 9/1/2021

CITY OF Vancouver WASHINGTON

CITY STREET LIGHTING REQUIREMENTS SCHEDULE LUMINANCE METHOD (CURVED SECTIONS)

STANDARD PLAN NUMBER T21-01B

CITY OF VANCOUVER STREET LIGHT REQUIREMENTS ILLUMINANCE METHOD	Illumination for Intersections			
	Average Maintained Illumination at Pavement by Pedestrian Area Classification in fc			Illuminance Unformity (4)
Functional Classification	High	Medium	Low	Average to Minimum
Major Arterial/Major Arterial	3.4	2.6	1.8	3.0
Major Arterial/Minor Arterial	2.2	1.7	1.2	3.0
Major Arterial/Collector	2.9	2.2	1.5	3.0
Major Arterial/Industrial	2.4	1.9	0.9	3.0
Major Arterial/Local Access	2.6	2.0	1.3	3.0
Minor Arterial/Minor Arterial	2.0	1.6	1.2	3.0
Minor Arterial/Collector	1.8	1.4	1.0	3.0
Minor Arterial/Industrial	2.2	1.8	0.9	3.0
Minor Arterial/Local Access	1.5	1.1	0.9	3.0
Collector/Collector	2.4	1.8	1.2	4.0
Collector/Industrial	2.0	1.6	0.6	3.0
Collector/Local Access	2.1	1.6	1.0	4.0
Industrial/Industrial	2.4	2.0	–	3.0
Industrial/Local Access	1.8	1.5	0.5	4.0
Local Access/Local Access	1.8	1.4	0.8	6.0

SEE T21–01D FOR (#) NOTE INFORMATION.

REV NO.	DATE	BY	APPR
1	1/15	RAW	CJC
2	9/21	RAW	CJC

PUBLIC WORKS – STREETS AND TRANSPORTATION

APPROVED BY: TRAFFIC ENGINEER MANAGER

APPROVED DATE: 9/1/2021

CITY OF Vancouver WASHINGTON

CITY STREET LIGHTING REQUIRMENTS INTERSECTION ILLUMANCE

STANDARD PLAN NUMBER

T21–01C

I:\CITYAPPS\AUTOCAD\STD_DETAILS\DRAWING_FILES\T21–01C

NOTES:

ALL INFORMATION IN THIS TABLE IS INTENDED TO PRODUCE A LIGHTING DESIGN WITH LUMINANCE LEVELS AND LUMINANCE UNIFORMITY FOR STRAIGHT ROADWAYS AND ILLUMINANCE LEVELS AND UNIFORMITY FOR INTERSECTIONS AND CURVED ROADWAYS. LIGHT LEVELS AND UNIFORMITY VALUES MEET OR EXCEED THOSE IN THE I.E.S., LIGHTING HANDBOOK, RP–8–14. INSTALLATION OF ADDITIONAL LIGHTS MAY BE NECESSARY TO MEET THE INTENT OF THIS STANDARD.

1. AVERAGE MAINTAINED LUMINANCE IS MEASURED IN CANDELA PER SQUARE METER. AVERAGE MAINTAINED ILLUMINANCE IS MEASURED IN FOOTCANDLES.

2. AT SIGNALIZED INTERSECTIONS, THE AVERAGE MAINTAINED ILLUMINANCE SHALL BE AS NOTED IN THE ILLUMINATION FOR INTERSECTIONS TABLE ON T21–01C. FOR INTERSECTIONS WITH ONLY ONE ROADWAY LIT, THE AVERAGE MAINTAINED LUMINANCE SHALL BE 1.5 TIMES THE HIGHEST LIT APPROACH.

3. LUMINANCE UNIFORMITY IS THE RATIO OF AVERAGE OR MAXIMUM MAINTAINED LUMINANCE TO MINIMUM LUMINANCE. LUMINANCE VALUES OUTSIDE THE ROADWAY SHALL NOT BE INCLUDED IN THE RATIO.

4. THE LATERAL LOCATION OF THE LIGHT STANDARD FOUNDATION SHALL BE A MINIMUM OF TWO FEET FROM THE FACE OF CURB TO THE FACE OF THE LIGHT POLE, SEE THE INDIVIDUAL LIGHTING DETAILS, LIGHTING SCHEDULES AND LOCATION ON PLANS FOR ADDITIONAL INFORMATION. THE LATERAL LOCATION OF THE CONDUIT AND JUNCTION BOXES SHALL BE ADJACENT TO THE BACK OF CURB, EXCEPT WHEN AN ALTERNATE LOCATION BETWEEN THE CURB AND SIDEWALK IS SHOWN ON THE PLANS. WHERE A PLANTING STRIP IS NOT PROVIDED AND THE SIDEWALK IS ADJACENT TO THE BACK OF CURB, THE LIGHT STANDARD SHALL NOT BE LOCATED MORE THAN EIGHT FEET FROM THE BACK OF CURB. WHERE THE SIDEWALK IS ATTACHED TO THE BACK OF CURB, THE CONDUITS AND JUNCTION BOXES SHALL BE LOCATED BEHIND THE SIDEWALK BUT NOT MORE THAT EIGHT FEET FROM THE BACK OF CURB. IF NO SIDEWALK IS PROVIDED.

5. LIGHTING LAYOUTS WILL REQUIRE APPROVAL AND POSSIBLE ADJUSTMENT TO MEET THE COV LIGHTING OBJECTIVES AND I.E.S. STANDARDS. THIS MAY INCLUDE ADJUSTMENT TO THE POLE SPACING AS LISTED AND MAY RESULT IN ADDITIONAL OR FEWER LIGHTS.

6. LIGHTING STANDARDS TYPE D, TYPE 0, TYPE P, AND TYPE R SHALL ONLY BE USED IN THE DESIGNATED LIGHTING DISTRICTS. LIGHT STANDARDS LISTED ARE DEFINED IN MORE DETAIL IN THE "STANDARDS AND SPECIFICATIONS FOR TRAFFIC CONTROL DEVICES AND LIGHTING" DOCUMENT AND THE CITY'S APPROVED PRODUCTS LIST. STANDARD DETAILS FOR THE LIGHT STANDARDS ARE AVAILABLE.

7. ALL LIGHTING FIXTURES SHALL BE LIGHT EMITTING DIODE (LED) OR AS DIRECTED BY THE CITY. LIGHTING CIRCUITS SHALL BE 120 VOLTS. POST TOP FIXTURES IN RESIDENTIAL LAND USE AREAS SHALL BE I.E.S. TYPE V DISTRIBUTION. SEE THE "STANDARDS AND SPECIFICATIONS FOR TRAFFIC.

8. THE MOUNTING HEIGHT OF THE FIXTURE IS MEASURED FROM THE ROADWAY SURFACE TO THE CENTER OF THE LIGHT SOURCE. 6 FEET ARMS ARE USED IN ROADWAYS WITH PLANTER STRIPS AND 10 FEET ARMS IN CURB TIE AREAS.

9. ALTERNATIVE LIGHTING LAYOUTS MAY BE SUBMITTED FOR REVIEW. WHERE LIGHTING IS REQUIRED ON BOTH SIDES, DESIGNS SHALL BE "OPPOSITE LIGHTING" ON MAJOR ROADWAYS GREATER THAN 48 FEET IN THE USE OF STAGGERED LIGHTING SHALL ONLY BE USED WHERE "OPPOSITE LIGHTING" IS NOT PRACTICAL. LIGHTING LAYOUTS ON LOCAL RESIDENTIAL STREETS WITHIN A SUBDIVISION MAY VARY FROM SIDE TO SIDE.

10. LOW, MEDIUM, AND HIGH PEDESTRIAN CONFLICT AREAS ARE AS DEFINED IN THE ANSI/IES RP–8–14. **LOW PEDESTRIAN CONFLICT AREAS** ARE GENERALLY IN RESIDENTIAL AREAS. **MEDIUM PEDESTRIAN CONFLICT AREAS** HAVE MODERATE NIGHT PEDESTRIAN ACTIVITIES TYPICALLY FOUND NEAR COMMUNITY FACILITIES SUCH AS LIBRARIES AND RECREATION CENTERS. **HIGH PEDESTRIAN CONFLICT AREAS** ARE TYPICALLY FOUND NEAR COMMERCIAL AREAS IN URBAN ENVIRONMENTS. CONSULT THE ANSI/IES RP–8–14 FOR COMPLETE DEFINITIONS OF PEDESTRIAN CONFLICT AREAS. THE CITY OF VANCOUVER TRAFFIC ENGINEER'S DETERMINATION OF THE CORRECT PEDESTRIAN CONFLICT DESIGNATION FOR AN AREA SHALL BE USED FOR LIGHTING SYSTEM DESIGN.

REV NO.	DATE	BY	APPR
1	1/15	RAW	CJC
2	7/19	RAW	CJC
3	9/21	RAW	CJC

PUBLIC WORKS – STREETS AND TRANSPORTATION

APPROVED BY: TRAFFIC ENGINEER MANAGER

APPROVED DATE: 9/1/2021

CITY OF Vancouver WASHINGTON

CITY STREET LIGHTING REQUIRMENTS NOTES

STANDARD PLAN NUMBER

T21–01D

I:\CITYAPPS\AUTOCAD\STD_DETAILS\DRAWING_FILES\T21–01D

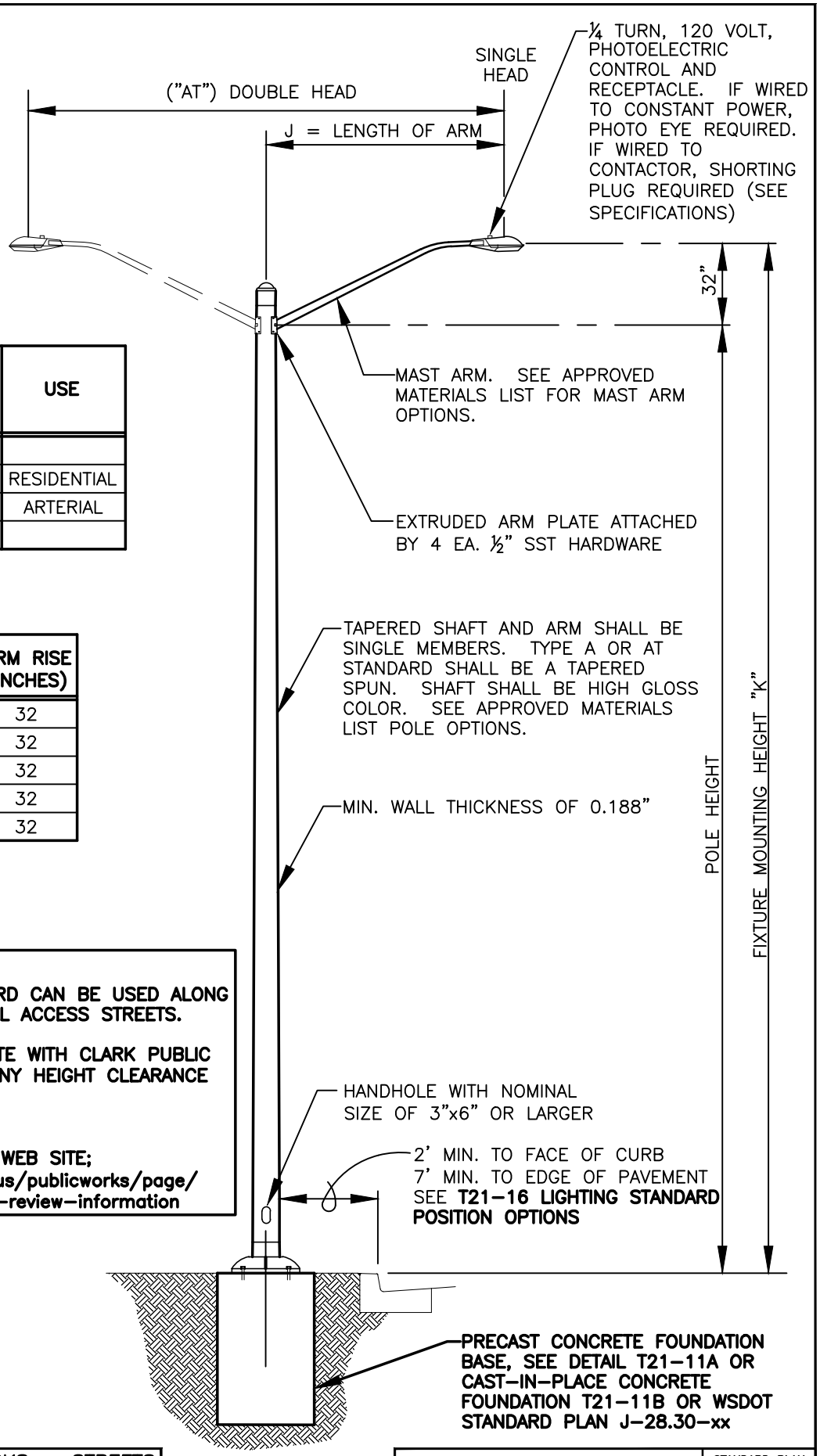

FIXTURE MOUNTING HEIGHT (FT.), "K"	POLE HEIGHT (FT.)	USE
20	18	
25	23	RESIDENTIAL
30	28	ARTERIAL
35	33	

ARM LENGTH (FT.) "J"	ARM RISE (INCHES)
4	32
6 (STD.)	32
8	32
10	32
12	32

NOTES:

1. **THIS LIGHTING STANDARD CAN BE USED ALONG RESIDENTIAL AND LOCAL ACCESS STREETS.**
2. **CHECK AND COORDINATE WITH CLARK PUBLIC UTILITIES (CPU) FOR ANY HEIGHT CLEARANCE CONFLICTS.**

APPROVED MATERIALS LIST:
SEE CITY OF VANCOUVER'S WEB SITE;
http://www.cityofvancouver.us/publicworks/page/transportation-development-review-information

REV NO.	DATE	BY	APPR
1	4/06	RAW	AGE
2	2/07	RAW	AGE
3	8/08	RAW	AGE
4	1/15	RAW	AGE
5	7/19	RAW	CJC
6	9/21	RAW	CJC

PUBLIC WORKS – STREETS AND TRANSPORTATION

APPROVED BY: TRAFFIC ENGINEER MANAGER

APPROVED DATE: 9/1/2021

CITY OF Vancouver WASHINGTON

TYPE A AND TYPE AT LIGHTING STANDARDS

STANDARD PLAN NUMBER T21-02

I:\CITYAPPS\AUTOCAD\STD_DETAILS\DRAWING_FILES\T21-02

NOTES:

1. DIRECT BURIAL POLES ARE AN OPTION FOR TYPE D LIGHTING STANDARDS, SEE MATERIALS LIST.

APPROVED MATERIALS LIST:
SEE CITY OF VANCOUVER'S WEB SITE;
http://www.cityofvancouver.us/publicworks/page/transportation-development-review-information

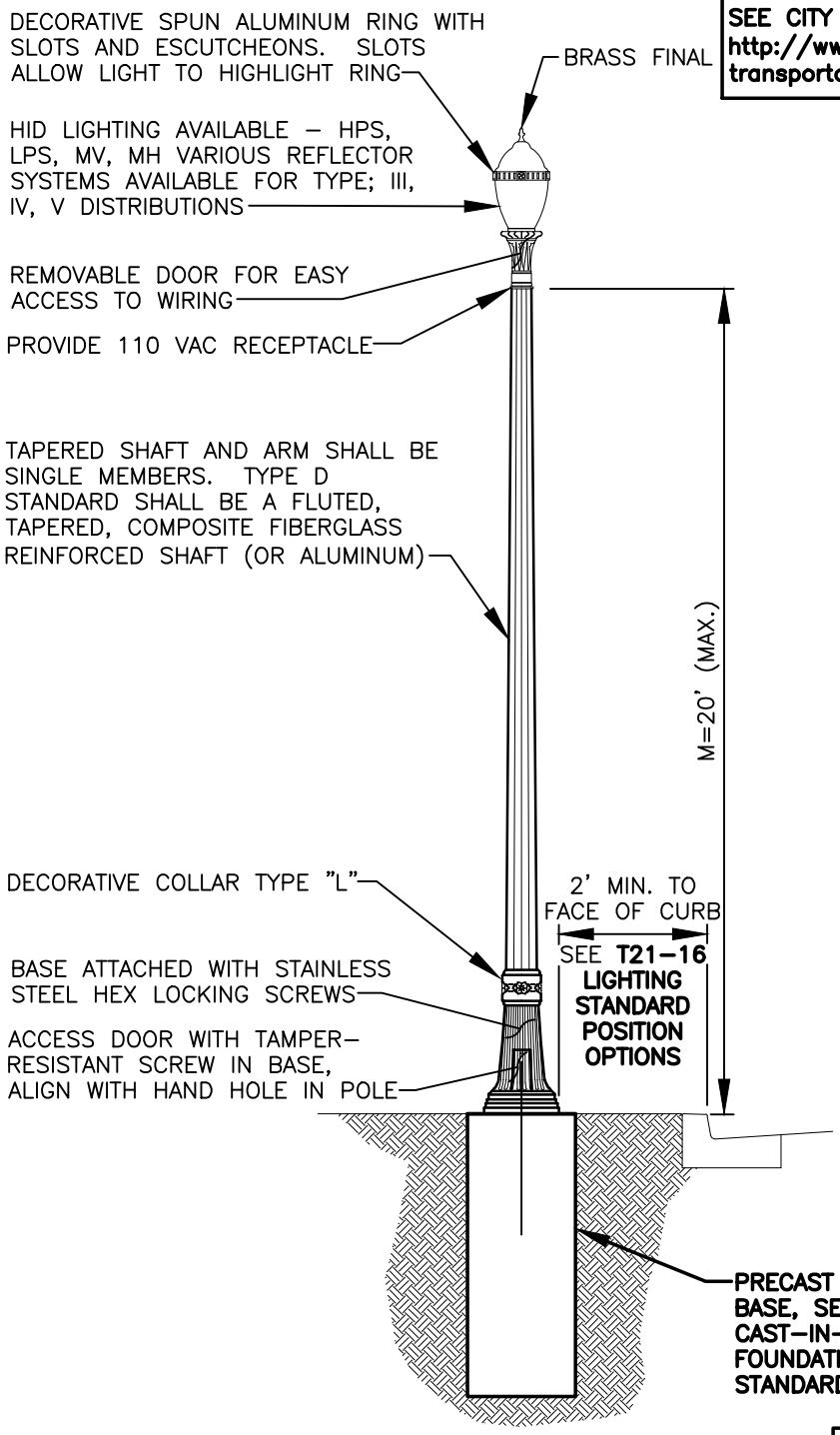

NOTE:
DIFFERENT MANUFACTURER PARTS CAN NOT BE INTERCHANGED.

NOTE:
THIS LIGHTING STANDARD SHALL BE USED IN THE UPTOWN LIGHTING DISTRICT AND ON RESIDENTIAL STREETS, UNLESS THE SURROUNDING NEIGHBORHOOD LIGHTING FIXTURE IS THE TYPE A, TYPE AT OR TYPE N AND WILL BE DETERMINED ON A CASE BY CASE BASIS.

REFERENCES TO WSDOT STANDARD PLANS, USE THE MOST CURRENT VERSION OF THESE STANDARD PLANS.

REV NO.	DATE	BY	APPR
1	4/06	RAW	AGE
2	2/07	RAW	AGE
3	8/08	RAW	AGE
4	7/14	RAW	CJC
5	1/15	RAW	CJC
6	9/21	RAW	CJC

PUBLIC WORKS – STREETS AND TRANSPORTATION

APPROVED BY: TRAFFIC ENGINEER MANAGER

APPROVED DATE: 9/1/2021

CITY OF Vancouver WASHINGTON

TYPE D LIGHTING STANDARDS

STANDARD PLAN NUMBER T21-04

I:\CITYAPPS\AUTOCAD\STD_DETAILS\DRAWING_FILES\T21-04

NOTES:

APPROVED MATERIALS LIST:
SEE CITY OF VANCOUVER'S WEB SITE;
http://www.cityofvancouver.us/publicworks/page/transportation-development-review-information

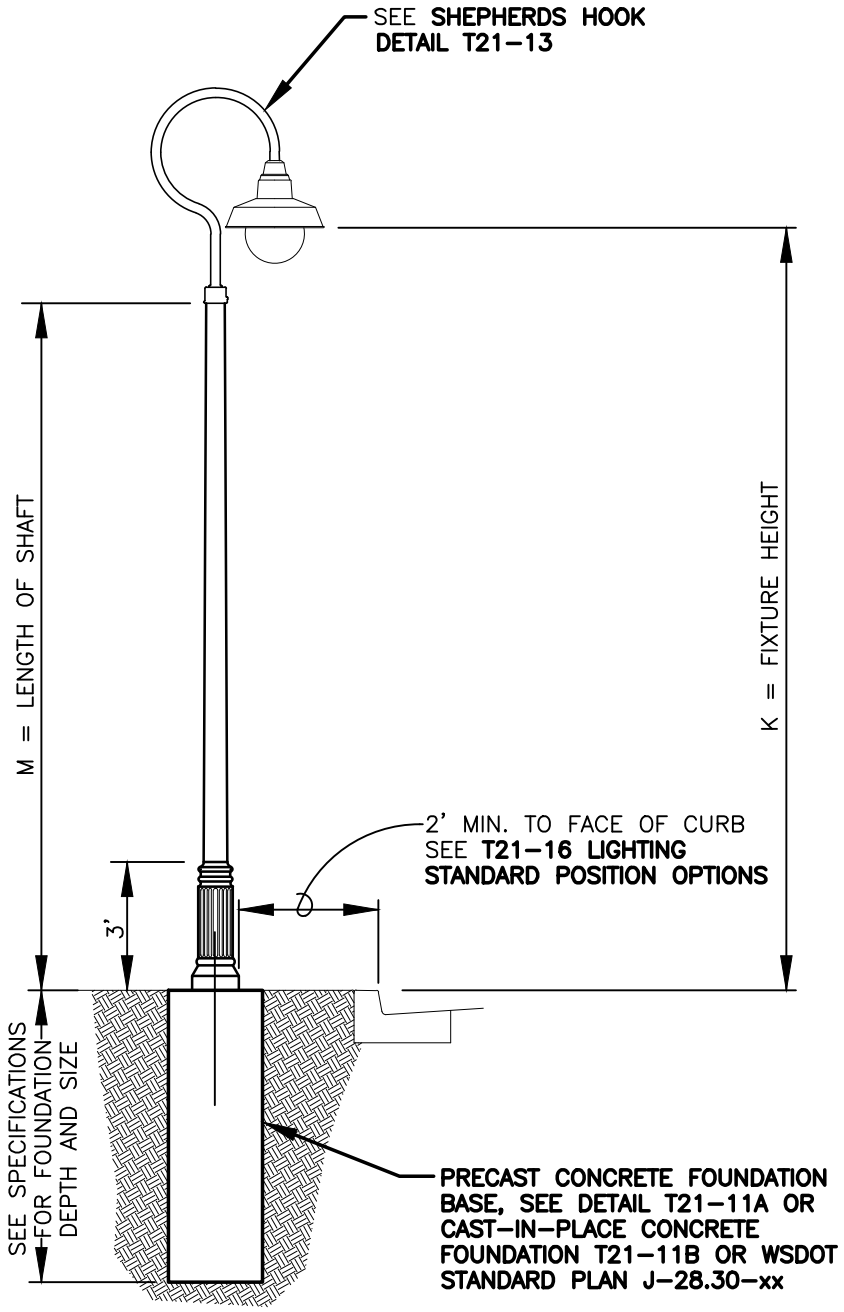

TYPE	AREA	M
OFFICER'S ROW AND HISTORIC RESERVE	ROADWAY	20'
	PATHWAY	14'

REFERENCES TO WSDOT STANDARD PLANS, USE THE MOST CURRENT VERSION OF THESE STANDARD PLANS.

NOTE:
THIS LIGHTING STANDARD SHALL BE USED IN THE OFFICERS ROW LIGHTING DISTRICT ONLY.

REV NO.	DATE	BY	APPR
1	4/06	RAW	AGE
2	2/07	RAW	AGE
3	8/08	RAW	AGE
4	7/14	RAW	CJC
5	1/15	RAW	CJC
6	9/21	RAW	CJC

PUBLIC WORKS – STREETS AND TRANSPORTATION

APPROVED BY: TRAFFIC ENGINEER MANAGER

APPROVED DATE: 9/1/2021

CITY OF Vancouver WASHINGTON

TYPE O
LIGHTING STANDARDS

STANDARD PLAN NUMBER
T21-06

I:\CITYAPPS\AUTOCAD\STD_DETAILS\DRAWING_FILES\T21-06

NOTES:

APPROVED MATERIALS LIST:
SEE CITY OF VANCOUVER'S WEB SITE;
http://www.cityofvancouver.us/publicworks/page/transportation-development-review-information

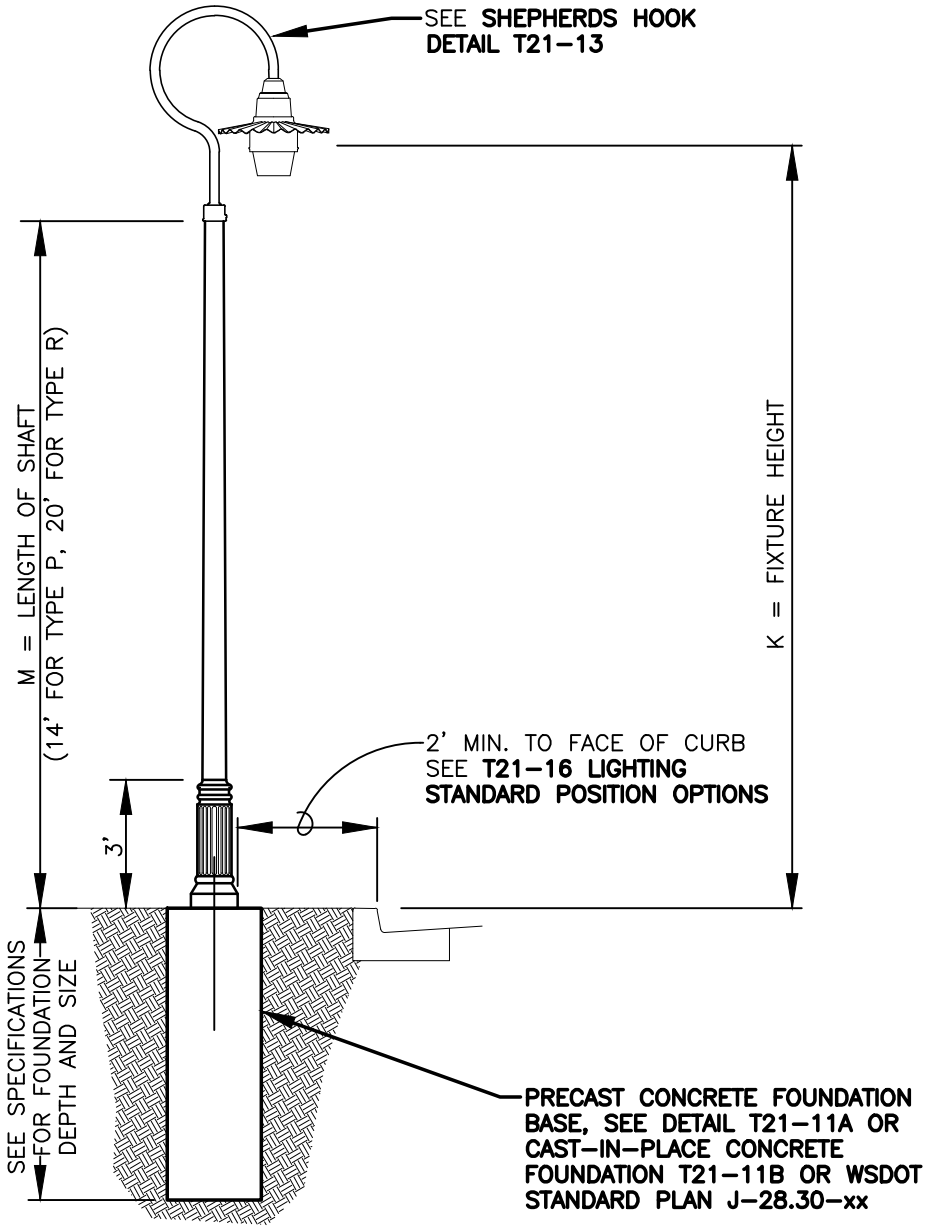

REFERENCES TO WSDOT STANDARD PLANS, USE THE MOST CURRENT VERSION OF THESE STANDARD PLANS.

NOTE:
LIGHTING STANDARD TYPE P SHALL BE USED IN THE PROMENADE PATHWAY LIGHTING DISTRICT ONLY.
LIGHTING STANDARD TYPE R SHALL BE USED IN THE PROMENADE ROADWAY LIGHTING DISTRICT ONLY.

REV NO.	DATE	BY	APPR
1	3/06	RAW	AGE
2	2/07	RAW	AGE
3	8/08	RAW	AGE
4	7/14	RAW	CJC
5	1/15	RAW	CJC
6	9/21	RAW	CJC

PUBLIC WORKS – STREETS AND TRANSPORTATION

APPROVED BY: TRAFFIC ENGINEER MANAGER

APPROVED DATE: 9/1/2021

CITY OF Vancouver WASHINGTON

TYPE P AND TYPE R LIGHTING STANDARDS

STANDARD PLAN NUMBER T21-07

I:\CITYAPPS\AUTOCAD\STD_DETAILS\DRAWING_FILES\T21-07

NOTES:

APPROVED MATERIALS LIST:
SEE CITY OF VANCOUVER'S WEB SITE;
http://www.cityofvancouver.us/publicworks/page/transportation-development-review-information

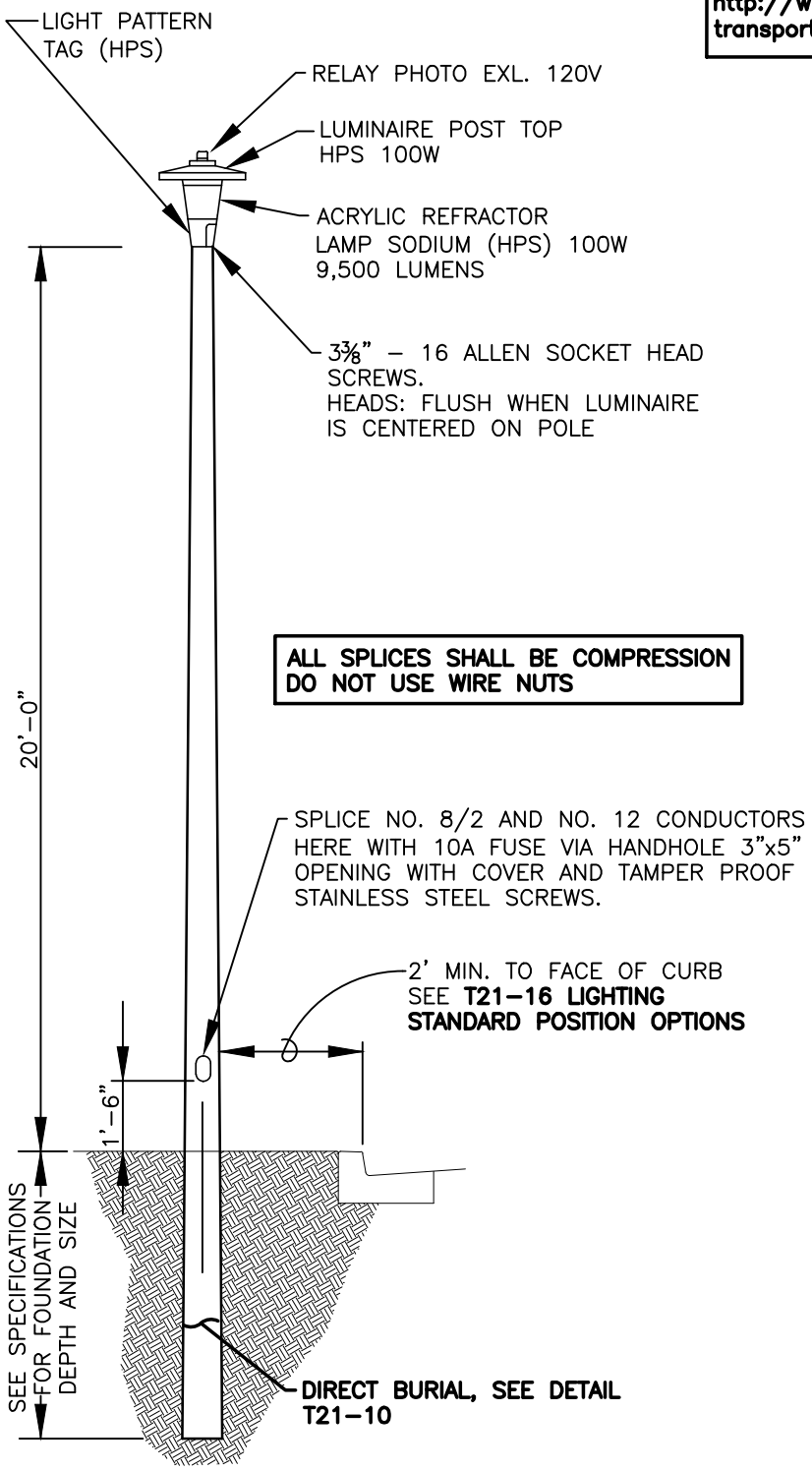

ALL SPLICES SHALL BE COMPRESSION
DO NOT USE WIRE NUTS

NOTE:
LIGHTING STANDARD TYPE N CAN BE USED ALONG RESIDENTIAL OR LOCAL ACCESS STREET ONLY OR MATCHING THE SURROUNDING NEIGHBORHOOD.

REV NO.	DATE	BY	APPR
1	3/06	RAW	AGE
2	4/06	RAW	AGE
3	2/07	RAW	AGE
4	8/08	RAW	AGE
5	1/15	RAW	CJC
6	9/21	RAW	CJC

PUBLIC WORKS – STREETS AND TRANSPORTATION

APPROVED BY: TRAFFIC ENGINEER MANAGER

APPROVED DATE: 9/1/2021

CITY OF Vancouver WASHINGTON

TYPE N
LIGHTING STANDARDS

STANDARD PLAN NUMBER
T21-08

I:\CITYAPPS\AUTOCAD\STD_DETAILS\DRAWING_FILES\T21-08

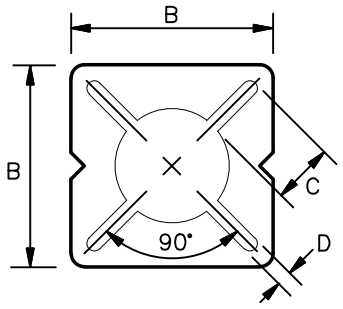

DETAIL A

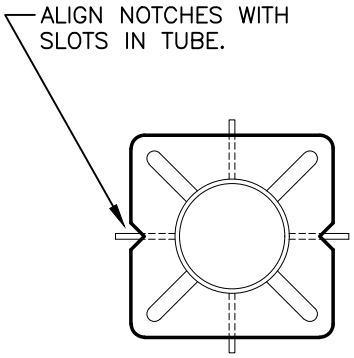

MOUNTING FLANGE
(SEE DETAIL A)

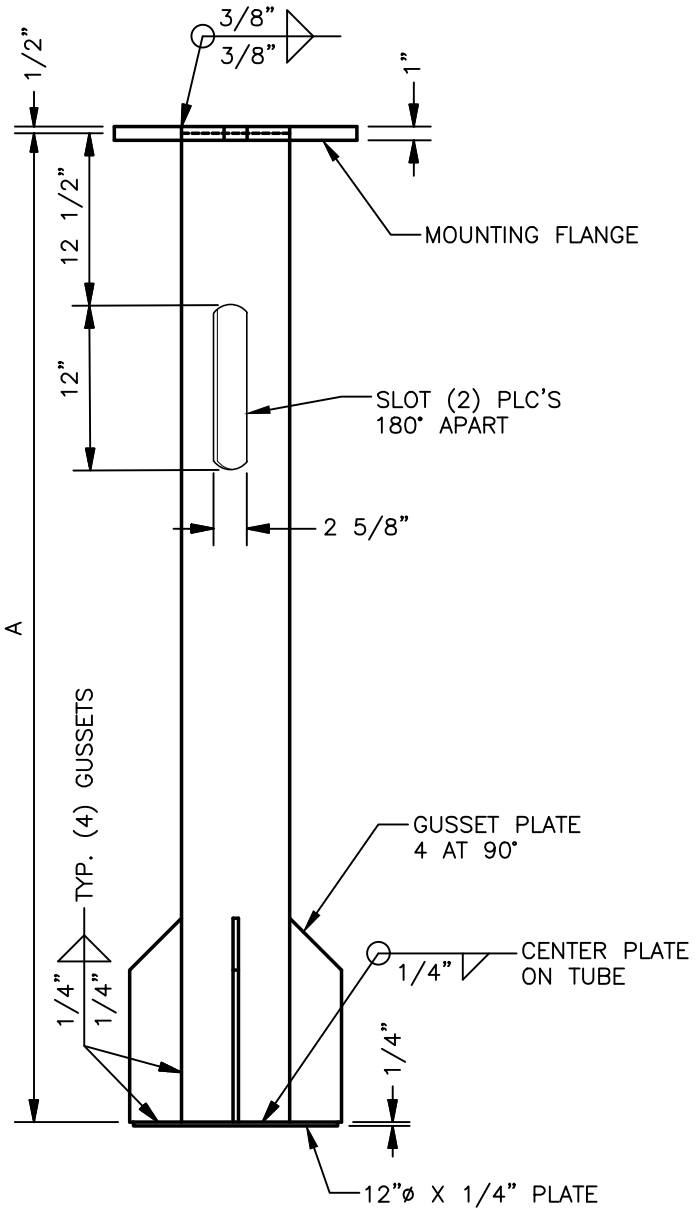

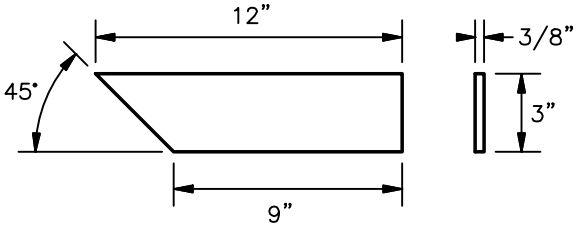

GUSSET PLATE

PRODUCT SPECIFICATIONS	BTP–663–60–12S	BTP–663–84–16S
A (LENGTH)	60 1/2"	84 1/2"
B	12"	15 3/4"
C	4 3/16"	5 7/16"
D	1 1/16"	1 1/8"
MOUNTING FLANGE	LBP–6ES–12S	LBP–66S–15S
DIAMETER	6 5/8"	6 5/8"
WALL TUBE	0.280"	0.280"

NOTE:

1. VARIES WITH APPLICATION. SEE PRODUCT SPECIFICATIONS TABLE.

REV NO.	DATE	BY	APPR
1	2/21	OIS	CJC
2	9/21	RAW	CJC

PUBLIC WORKS – STREETS AND TRANSPORTATION

APPROVED BY: TRAFFIC ENGINEER MANAGER
APPROVED DATE: 9/1/2021

CITY OF Vancouver WASHINGTON

TYPE A – STEEL LIGHT POLE FOUNDATION

STANDARD PLAN NUMBER
T21–10A

I:\CITYAPPS\AUTOCAD\STD_DETAILS\DRAWING_FILES\T21–10A

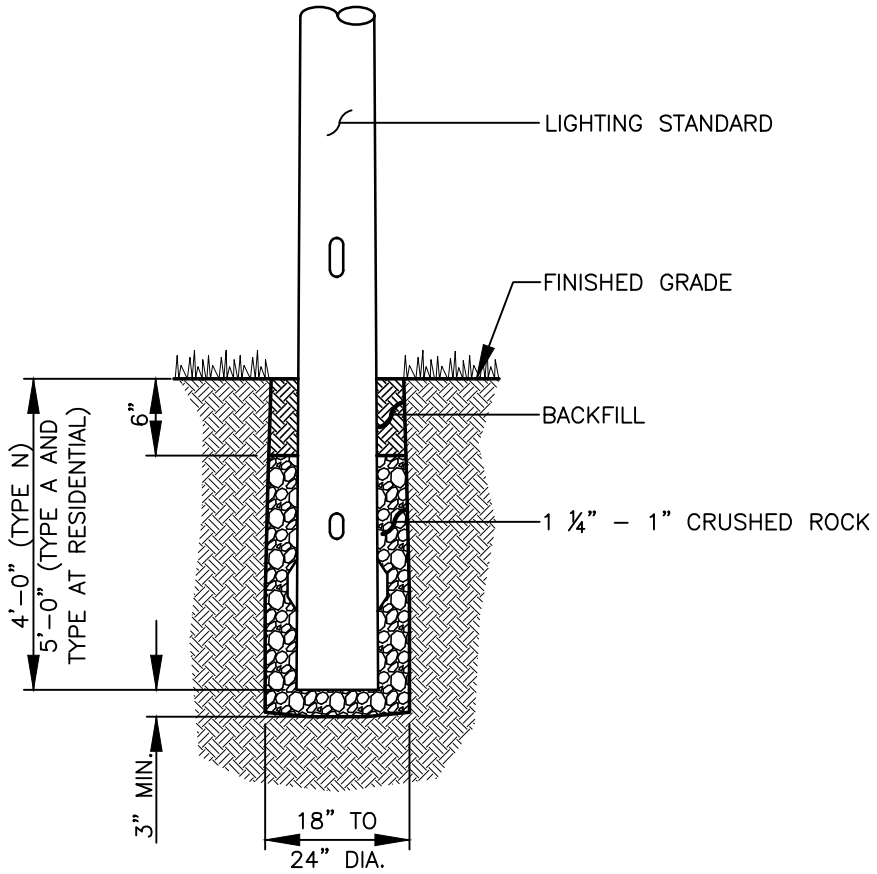

NOTE:

1. TO BE USED **ONLY** FOR **TYPE A AND TYPE AT RESIDENTIAL LIGHTING STANDARD (T21–03), TYPE D LIGHTING STANDARD (T21–04)** OR **TYPE N LIGHTING STANDARD (T21–08).**

REV NO.	DATE	BY	APPR
1	8/08	RAW	AGE
2	1/15	RAW	CJC
3	9/21	RAW	CJC

PUBLIC WORKS – STREETS AND TRANSPORTATION

APPROVED BY: TRAFFIC ENGINEER MANAGER

APPROVED DATE: 9/1/2021

CITY OF Vancouver WASHINGTON

DIRECT BURIAL FOR STREET LIGHTING STANDARD

STANDARD PLAN NUMBER

T21–10B

I:\CITYAPPS\AUTOCAD\STD_DETAILS\DRAWING_FILES\T21-10B

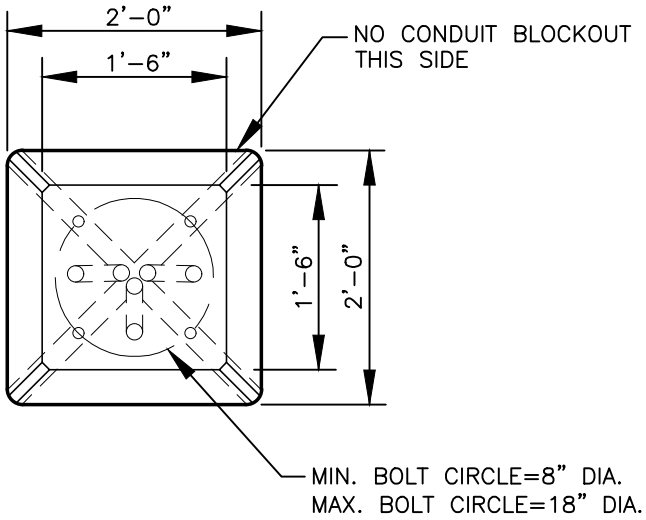

TOP VIEW

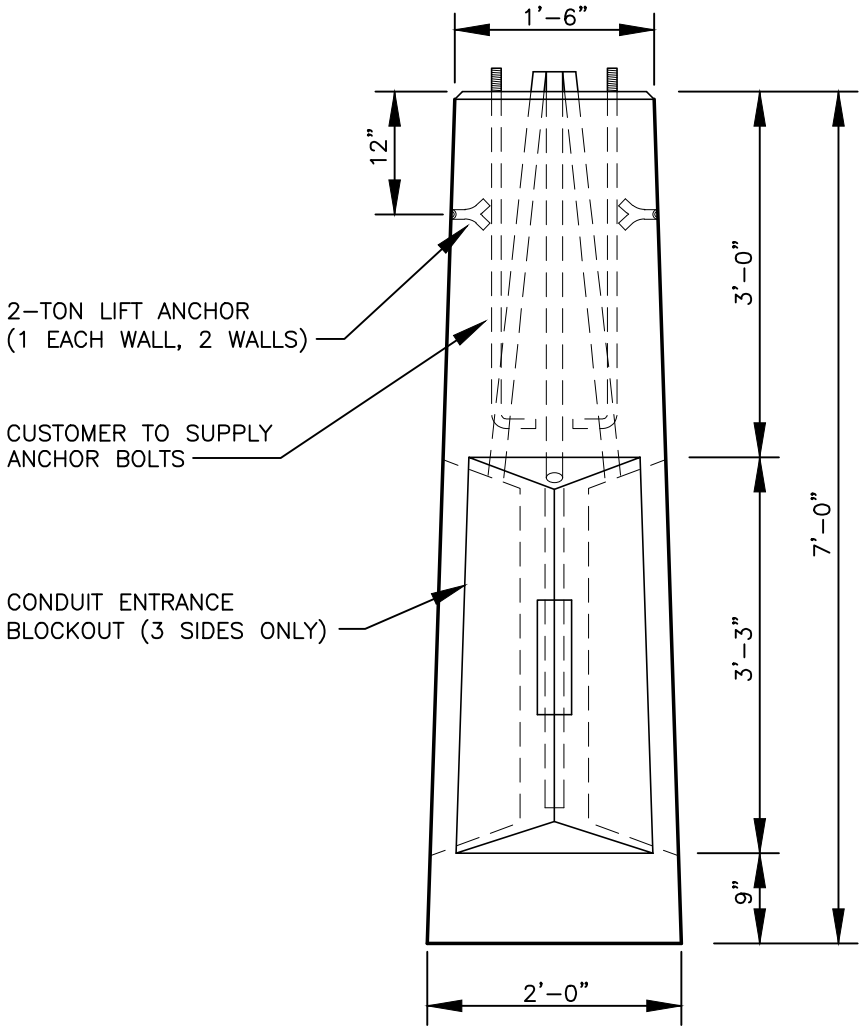

SIDE VIEW

NOTE:

1. CAST–IN–PLACE FOUNDATIONS CAN BE USED INSTEAD OF PRECAST FOUNDATIONS WHEN NECESSARY WITH CITY TRAFFIC ENGINEER'S APPROVAL. FOR CAST–IN–PLACE FOUNDATIONS, SEE **WSDOT STANDARD PLAN J–28.30–xx "STEEL LIGHT STANDARD FOUNDATION TYPES A AND B".**

REFERENCES TO WSDOT STANDARD PLANS, USE THE MOST CURRENT VERSION OF THESE STANDARD PLANS.

REV NO.	DATE	BY	APPR
1	1/15	RAW	CJC
2	9/21	RAW	CJC

PUBLIC WORKS – STREETS AND TRANSPORTATION

APPROVED BY: TRAFFIC ENGINEER MANAGER

APPROVED DATE: 9/1/2021

CITY OF Vancouver WASHINGTON

PRECAST FOUNDATION FOR STREET LIGHTING

STANDARD PLAN NUMBER T21–11A

I:\CITYAPPS\AUTOCAD\STD_DETAILS\DRAWING_FILES\T21–11A

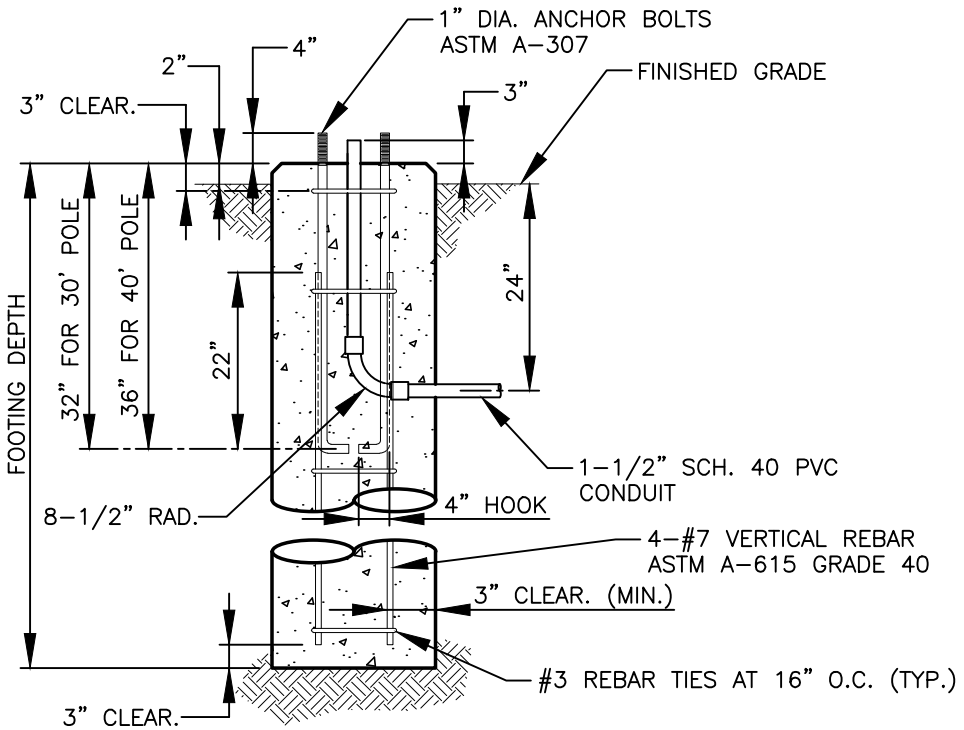

MOUNTING BASE DETAIL

NOTE:
CONCRETE STRENGTH = 3,000 PSI AT 28 DAYS.
CONCRETE STRENGTH = 2,000 PSI PRIOR TO SETTING POLE.

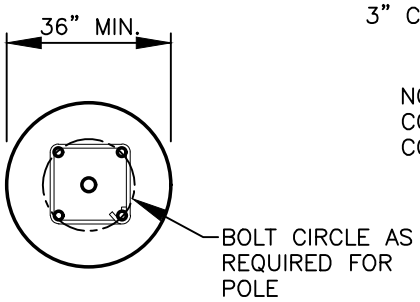

MOUNTING BASE TOP VIEW

POLE LENGTH (FEET)	MINIMUM FOOTING DEPTH IN FEET. SEE SOIL TABLE		
	A	B	C
30	5'-0"	6'-6"	8'-0"
40	5'-6"	7'-0"	8'-6"

SOIL TYPE	CLASS OF MATERIAL (UNIFORM BUILDING CODE)	
A	GOOD	COMPACT WELL-GRADED SAND AND GRAVEL.
	HARD CLAY	WELL-GRADED FINE AND COARSE SAND (ALL DRAINED SO WATER WILL NOT STAND).
B	AVERAGE	COMPACT FINE SAND MEDIAM CLAY COMPACT SANDY LOAM LOOSE COARSE SAND AND GRAVEL (ALL DRAINED SO WATER WILL NOT STAND).
C	POOR	SOFT CLAY CLAY LOAM POORLY COMPACTED SAND CLAYS CONTAINING LARGE AMOUNTS OF SILT (WATER STANDS DURING WET SEASON).

NOTE:
1. FORMING MATERIALS (SONOTUBE) SHALL BE REMOVED FROM THE TOP OF THE FOUNDATION TO SIX INCHES BELOW FINISHED GRADE AFTER CONCRETE HAS HAD A CHANCE TO SET UP.
2. SOIL BELOW MOUNTING BASE TO BE UNDISTURBED.

NOTE:
1. CAST-IN-PLACE FOUNDATIONS CAN BE USED INSTEAD OF PRECAST FOUNDATIONS WHEN NECESSARY WITH CITY TRAFFIC ENGINEER'S APPROVAL. FOR CAST-IN-PLACE FOUNDATIONS, SEE **WSDOT STANDARD PLAN J-28.30-xx "STEEL LIGHT STANDARD FOUNDATION TYPES A AND B".**

REFERENCES TO WSDOT STANDARD PLANS, USE THE MOST CURRENT VERSION OF THESE STANDARD PLANS.

REV NO.	DATE	BY	APPR
1	1/15	RAW	CJC
2	4/18	RAW	CJC
3	9/21	RAW	CJC

PUBLIC WORKS - STREETS AND TRANSPORTATION
APPROVED BY: TRAFFIC ENGINEER MANAGER
APPROVED DATE: 9/1/2021

CITY OF Vancouver WASHINGTON

CAST-IN-PLACE FOUNDATION FOR STREET LIGHTING

STANDARD PLAN NUMBER
T21-11B

I:\CITYAPPS\AUTOCAD\STD_DETAILS\DRAWING_FILES\T21-11B

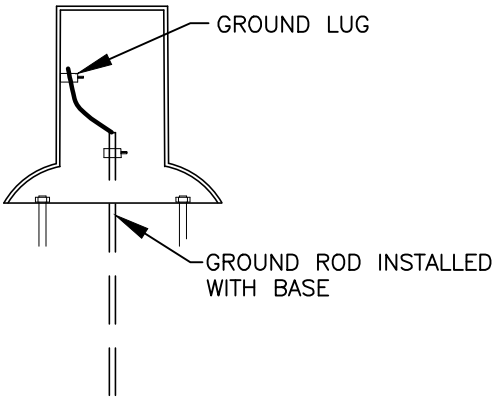

GROUNDING DETAIL

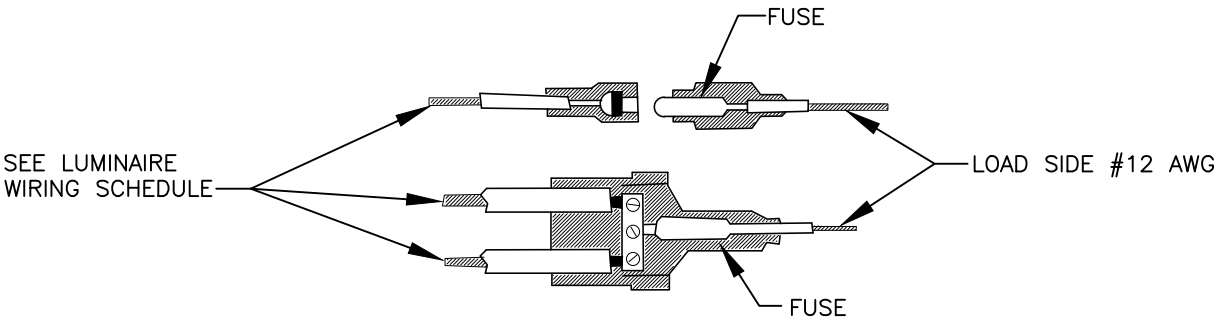

"V" DISCONNECT – FUSED

FOR A.W.G.

REV NO.	DATE	BY	APPR
1	8/04	RAW	AGE
2	3/06	RAW	AGE
3	2/07	RAW	AGE
4	8/08	RAW	AGE
5	1/15	RAW	CJC
6	9/21	RAW	CJC

PUBLIC WORKS – STREETS AND TRANSPORTATION

APPROVED BY: TRAFFIC ENGINEER MANAGER

APPROVED DATE: 9/1/2021

CITY OF Vancouver WASHINGTON

STREET LIGHTING GROUNDING DETAILS AND "V" DISCONNECT – FUSED FOR AWG.

STANDARD PLAN NUMBER

T21–12

I:\CITYAPPS\AUTOCAD\STD_DETAILS\DRAWING_FILES\T21–12

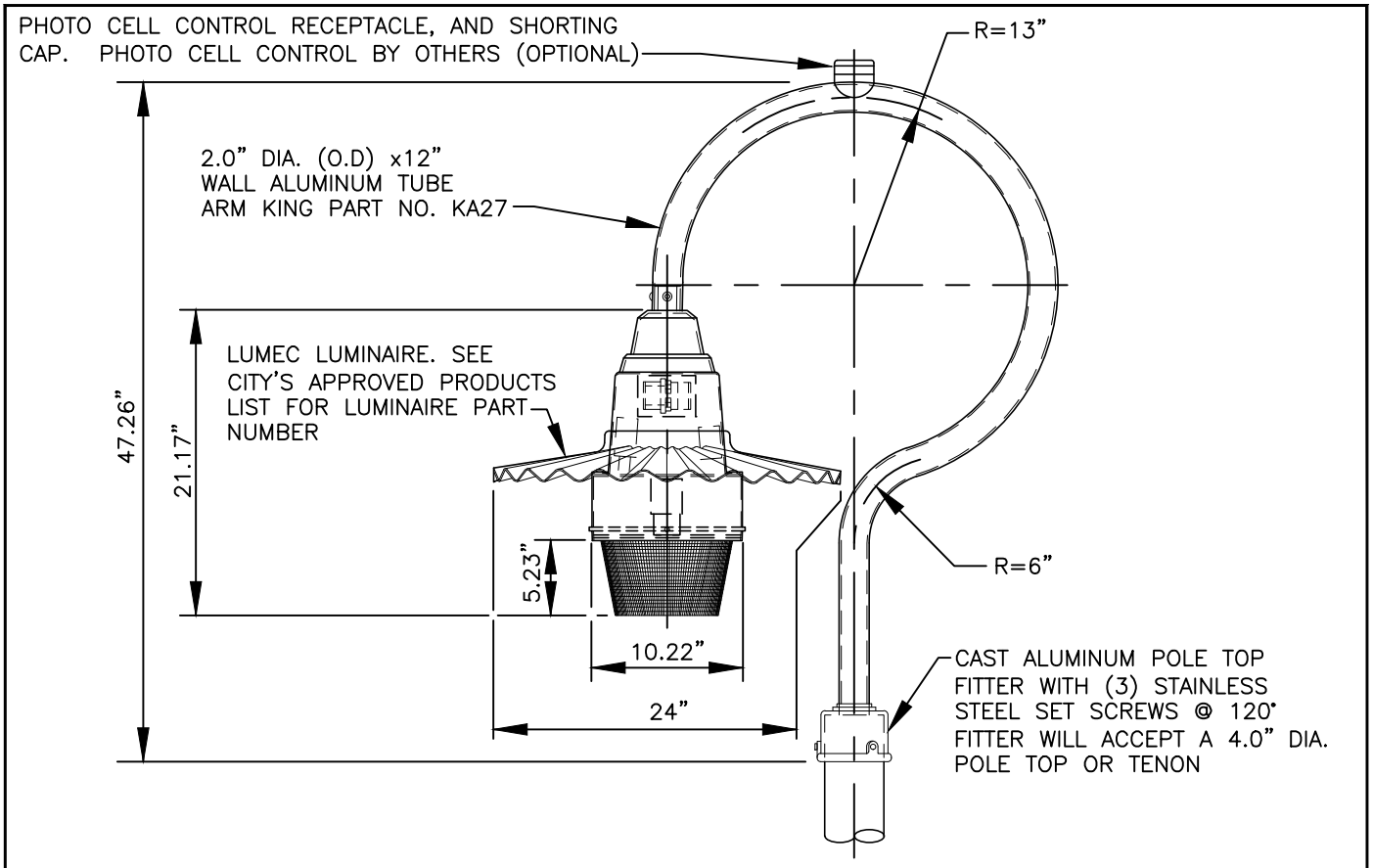

TYPE P AND TYPE R LIGHTING FIXTURE

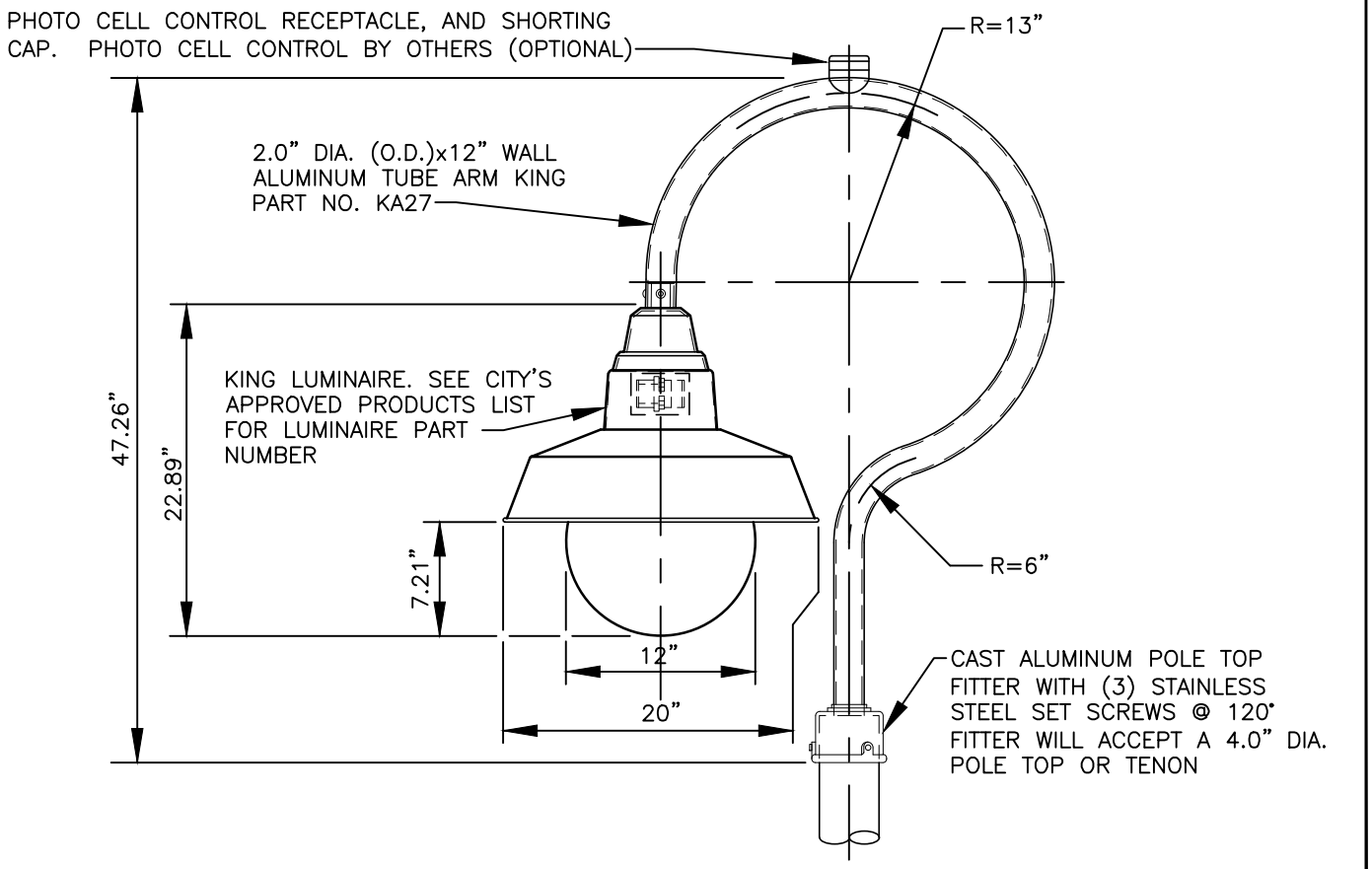

TYPE O LIGHTING FIXTURE

REV NO.	DATE	BY	APPR
1	8/04	RAW	AGE
2	3/06	RAW	AGE
3	2/07	RAW	AGE
4	8/08	RAW	AGE
5	1/15	RAW	CJC
6	9/21	RAW	CJC

PUBLIC WORKS – STREETS AND TRANSPORTATION

APPROVED BY: TRAFFIC ENGINEER MANAGER

APPROVED DATE: 9/1/2021

CITY OF Vancouver WASHINGTON

SHEPPARDS HOOK DETAIL FOR TYPE O, TYPE P AND TYPE R STREET LIGHTING STANDARD

STANDARD PLAN NUMBER

T21–13

I:\CITYAPPS\AUTOCAD\STD_DETAILS\DRAWING_FILES\T21-13

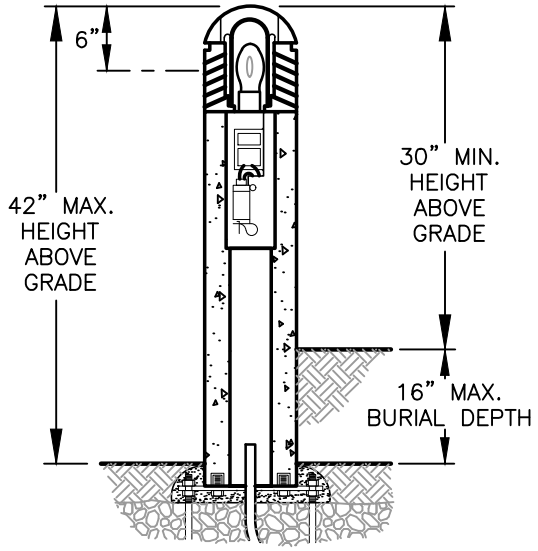

SINGLE FUNCTION LUMINAIRE
CONCRETE SHAFT

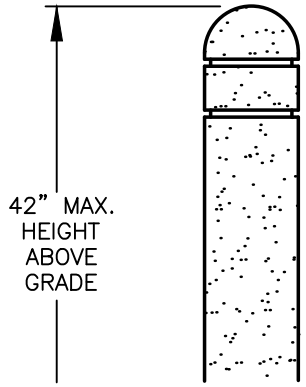

BOLLARD
CONCRETE SHAFT

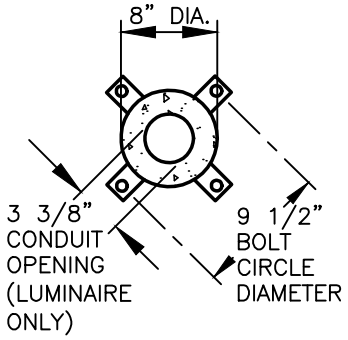

BASE PLAN

NOTES:

1. CERTIFICATION SHALL BE UNDERWRITERS LABORATORIES LISTED FOR 120 AND 240 VOLT WET LOCATIONS.
2. TOP CAP SHALL BE A ONE PIECE ALUMINUM CASTING 3/16" MINIMUM THICKNESS, SECURED TO LOUVERS BY CONCEALED ALLEN SCREWS IN KEYHOLE SLOTS. FOR RE-LAMPING ACCESS, ALLEN SCREWS SHALL NOT REQUIRE COMPLETE REMOVAL.
3. LOUVERS SHALL BE A ONE PIECE ALUMINUM CASTING WITH VERTICAL SUPPORT RIBS AT 90° INTERVALS. HORIZONTAL LOUVER BLADES SHALL HAVE A 1 3/4" DEPTH, A 65° UPWARD PITCH AND PROVIDE LIGHT SOURCE CUTOFF ABOVE HORIZONTAL. LOUVER CASTING SHALL BE SECURED TO SHAFT BY FOUR INTERNAL TIE RODS.
4. LAMP ENCLOSURE SHALL BE ONE PIECE TEMPERED MOLDED GLASS WITH INTERNAL FLUTES AND FULL GASKETING AT BOTTOM EDGE.
5. SOCKET SHALL BE PORCELAIN MEDIUM BASE RATED 4KV.
6. FIXTURE HEAD SHALL ALLOW FLOW-THROUGH VENTILATION AROUND AND ABOVE THE LAMP ENCLOSURE.
7. SHAFT CEMENT SHALL CONFORM TO CURRENT SPECIFICATIONS FOR "PORTLAND CEMENT." ASTM C150, TYPE I OR II. AGGREGATES SHALL MEET CURRENT REQUIREMENTS OF "SPECIFICATIONS FOR CONCRETE AGGREGATES," ASTM C33. WATER SHALL BE CLEAN AND FREE FROM DELETERIOUS AMOUNTS OF SILT, OIL, ACIDS, ALKALIES OR ORGANIC MATERIALS. WIRE FOR REINFORCEMENT SHALL CONFORM TO ASTM A185. STEEL FOR LUGS AND PLATES SHALL CONFORM TO ASTM A36, OR A283 GRADE D.
8. BALLAST SHALL BE HIGH POWER FACTOR FOR -20°F STARTING, FACTORY MOUNTED TO A RIGID HARNESS FOR FIELD WIRING AND SUSPENSION FROM FIXTURE WITHIN THE CONCRETE SHAFT.
9. ANCHOR BOLTS SHALL BE FOUR 3/8" X 10" + 2" ZINC PLATED L-HOOKS, EACH WITH TWO NUTS, WASHERS AND A RIGID PRESSED BOARD TEMPLATE.
10. FINISH SHALL BE T.G.I.C. THERMOSET POLYESTER POWDER-COAT PAINT APPLIED OVER A CHROMATE CONVERSION COATING. NATURAL GRAY SHALL BE USED FOR THE CONCRETE COLOR FINISH. LUMINAIRE FINISH SHALL BE BLACK.
11. SURFACE SHALL BE MEDIUM SAND-BLASTED WITH ANTI-GRAFFITI SEALER. COLOR SHALL BE NATURAL GRAY OR INTEGRAL IN CONCRETE MIX.
12. CURE AND STRENGTH SHALL ALLOW FOR COMPLETION OF THE HYDRATION PROCESS, AND RESULT IN A 28 DAY COMPRESSIVE STRENGTH OF NOT LESS THAN 4,500 PSI.
13. MANUFACTURE SHALL BE BY FIBERGLASS MOLDS TO INSURE UNIFORM PARTS. MOLD PARTING LINES MAY BE SLIGHTLY VISIBLE IN FINISHED PARTS.
14. ANCHORAGE SHALL BE BY FOUR STEEL MOUNTING TABS FOR INSTALLATION ON FOUR 1/2" X 10" + 2" ZINC ELECTROPLATED L-HOOK ANCHOR BOLTS. EACH ANCHOR BOLT IS SUPPLIED WITH TWO NUTS, TWO WASHERS, AND A RIGID PRESSED BOARD TEMPLATE.
15. ELECTRICAL MODULE SHALL BE 100 WATT COATED 120 LINE VOLTS, 129 LINE WATTS AND 1.15 MAX. AMPS.
16. SHIPMENT SHALL BE PALLETIZED WITH ADEQUATE HOLD-DOWNS TO PREVENT LOAD MOVEMENT IN TRANSIT.
17. **KIM LIGHTING MODEL. SEE CITY'S APPROVED PRODUCTS LIST FOR PART NUMBER.**
18. SEE **TYPICAL CONNECTING PUBLIC STREET WITH PATHWAYS AND LIGHTING DETAIL T21-14B** FOR ADDITIONAL INFORMATION.

REV NO.	DATE	BY	APPR
1	8/04	RAW	AGE
2	3/06	RAW	AGE
3	2/07	RAW	AGE
4	8/08	RAW	AGE
5	1/15	RAW	CJC
6	9/21	RAW	CJC

PUBLIC WORKS - STREETS AND TRANSPORTATION

APPROVED BY: TRAFFIC ENGINEER MANAGER

APPROVED DATE: 9/1/2021

CITY OF Vancouver WASHINGTON

VANDAL RESISTANT BOLLARD (LIGHTED AND NON-LIGHTED)

STANDARD PLAN NUMBER

T21-14A

I:\CITYAPPS\AUTOCAD\STD_DETAILS\DRAWING_FILES\T21-14A

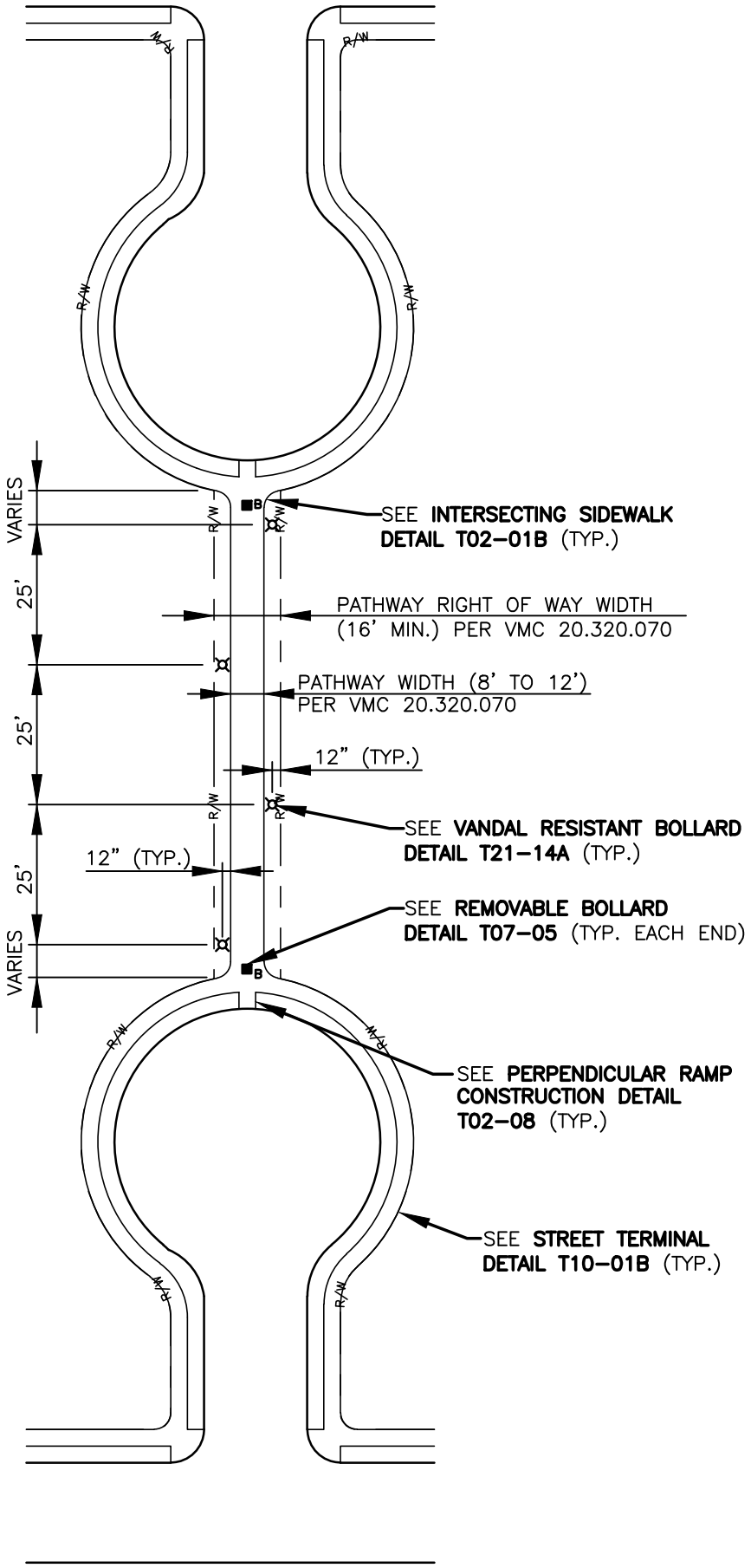

REV NO.	DATE	BY	APPR
1	2/07	RAW	AGE
2	8/08	RAW	AGE
3	1/15	RAW	CJC
4	9/21	RAW	CJC

PUBLIC WORKS – STREETS AND TRANSPORTATION

APPROVED BY: TRAFFIC ENGINEER MANAGER

APPROVED DATE: 9/1/2021

CITY OF Vancouver WASHINGTON

TYPICAL CONNECTING PUBLIC STREET WITH PATHWAYS AND LIGHTING

STANDARD PLAN NUMBER

T21–14B

I:\CITYAPPS\AUTOCAD\STD_DETAILS\DRAWING_FILES\T21–14B

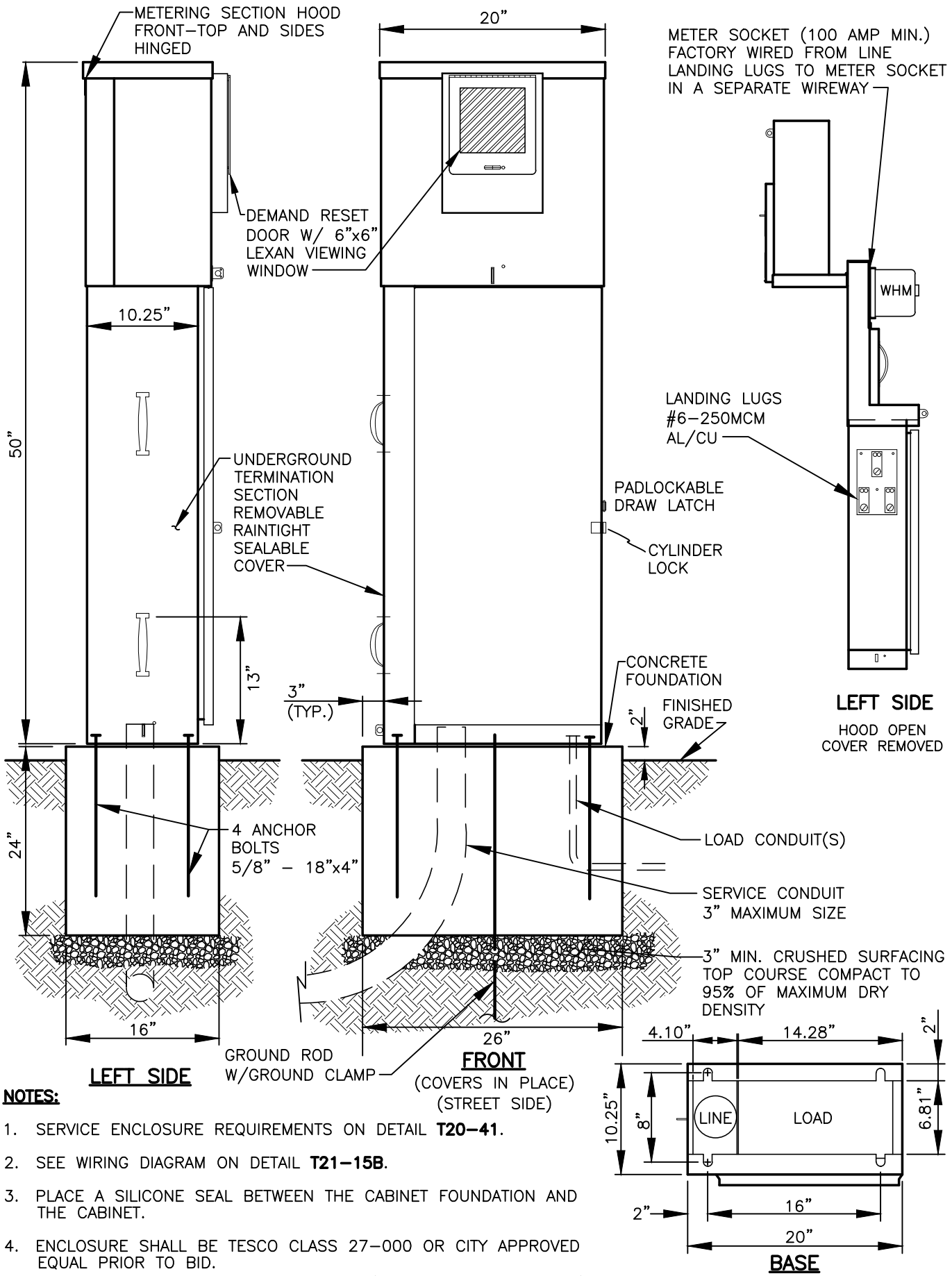

NOTES:

1. SERVICE ENCLOSURE REQUIREMENTS ON DETAIL **T20–41**.
2. SEE WIRING DIAGRAM ON DETAIL **T21–15B**.
3. PLACE A SILICONE SEAL BETWEEN THE CABINET FOUNDATION AND THE CABINET.
4. ENCLOSURE SHALL BE TESCO CLASS 27–000 OR CITY APPROVED EQUAL PRIOR TO BID.

REV NO.	DATE	BY	APPR
1	3/06	RAW	AGE
2	8/08	RAW	AGE
3	1/15	RAW	CJC
4	4/18	RAW	CJC
5	7/18	RAW	CJC
6	9/21	RAW	CJC

PUBLIC WORKS – STREETS AND TRANSPORTATION

APPROVED BY: TRAFFIC ENGINEER MANAGER

APPROVED DATE: 9/1/2021

CITY OF Vancouver WASHINGTON

STREET LIGHT CONTACTOR CABINET

STANDARD PLAN NUMBER T21–15A

P:\CITYAPPS\AUTOCAD\STD_DETAILS\DRAWING_FILES\T21–15A

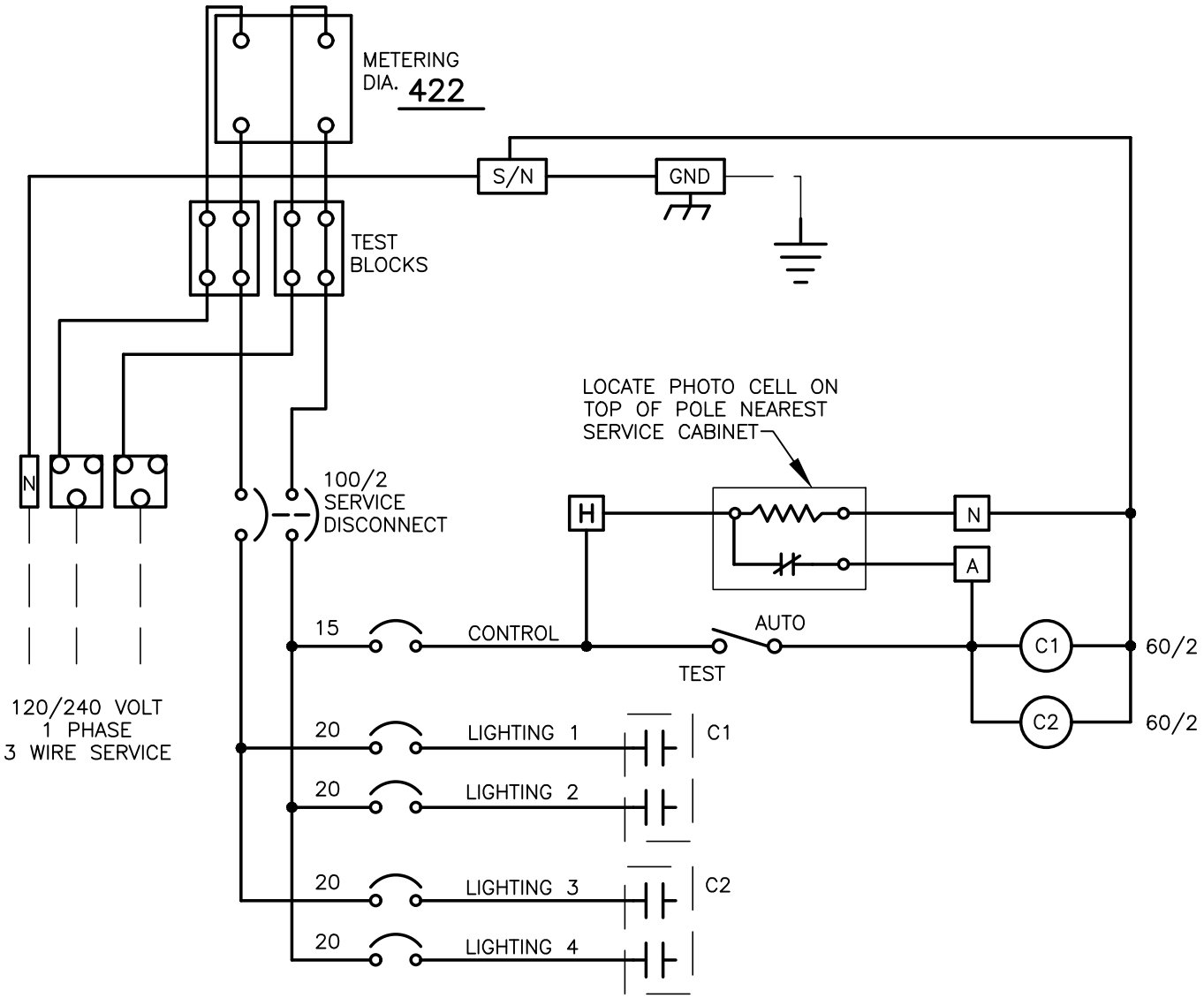

NOTE:

SEE DETAIL **T21–15A** FOR STREET LIGHT CONTACTOR DETAIL.

REV NO.	DATE	BY	APPR
1	8/04	RAW	AGE
2	3/06	RAW	AGE
3	2/07	RAW	AGE
4	8/08	RAW	AGE
5	1/15	RAW	CJC
6	9/21	RAW	CJC

PUBLIC WORKS – STREETS AND TRANSPORTATION

APPROVED BY: TRAFFIC ENGINEER MANAGER

APPROVED DATE: 9/1/2021

CITY OF Vancouver WASHINGTON

STREET LIGHTING CONTRACTOR SERIVCE WIRING DIAGRAM

STANDARD PLAN NUMBER

T21–15B

I:\CITYAPPS\AUTOCAD\STD_DETAILS\DRAWING_FILES\T21–15B

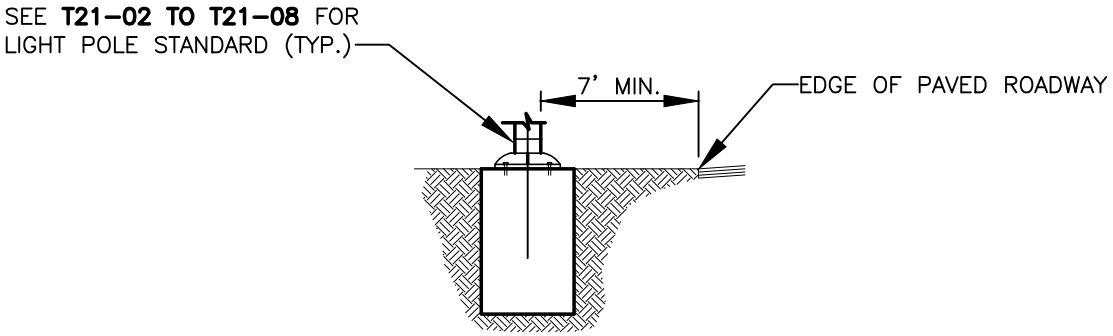

EDGE OF PAVEMENT (NO SIDEWALK)

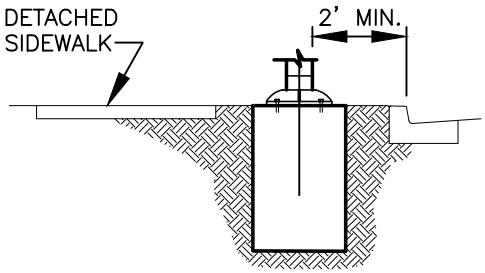

DETACHED SIDEWALK WITH PLANTER STRIP

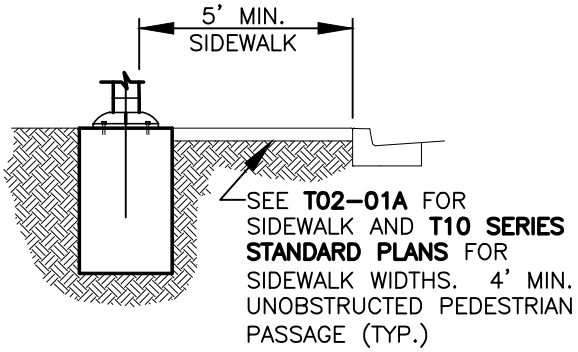

ATTACHED SIDEWALK OPTION 1

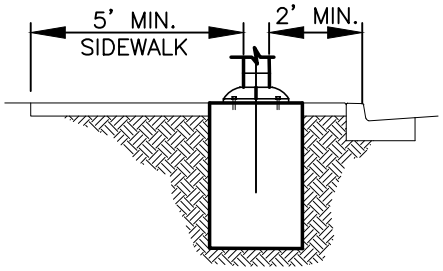

ATTACHED SIDEWALK OPTION 2
(REQUIRES ENGINEER'S
APPROVAL TO USE)

REV NO.	DATE	BY	APPR
1	1/15	RAW	CJC
2	9/21	RAW	CJC

PUBLIC WORKS – STREETS AND TRANSPORTATION

APPROVED BY: TRAFFIC ENGINEER MANAGER

APPROVED DATE: 9/1/2021

CITY OF Vancouver WASHINGTON

LIGHTING STANDARD POSITION OPTIONS

STANDARD PLAN NUMBER

T21–16

I:\CITYAPPS\AUTOCAD\STD_DETAILS\DRAWING_FILES\T21–16

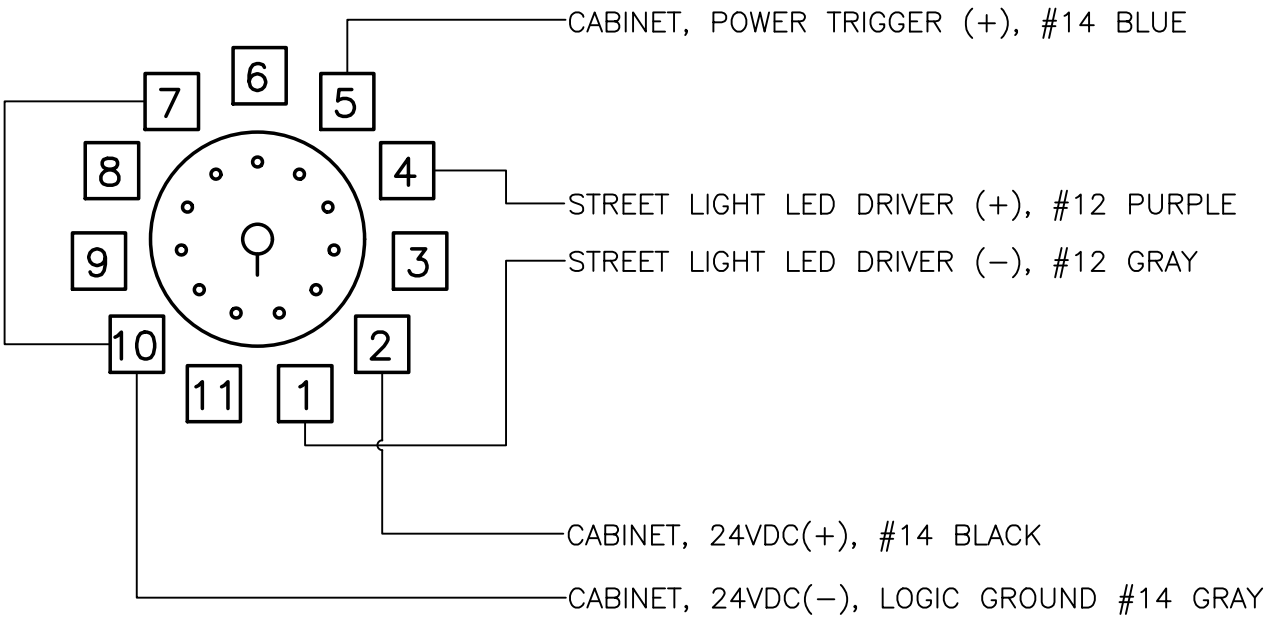

TIME DELAY RELAY, MACROMATIC TR−6192U WITH 11−PIN OCTAL SOCKET 70170−D, TO BE MOUNTED IN CONTROLLER CABINET.

TRAFFIC SIGNAL

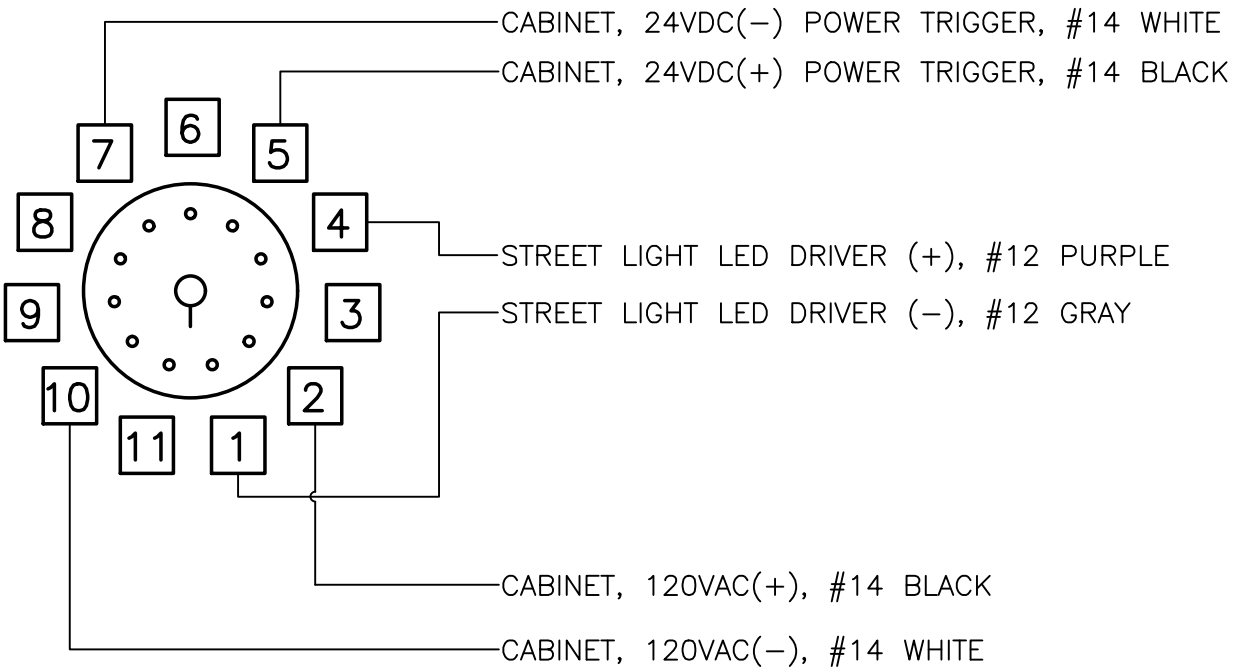

TIME DELAY RELAY, MACROMATIC TR−6172U WITH 11−PIN OCTAL SOCKET 70170−D, TO BE MOUNTED IN CONTROLLER CABINET.

RRFB − AC POWERED

REV NO.	DATE	BY	APPR
1	2/21	RAW	CJC
2	9/21	RAW	CJC

PUBLIC WORKS − STREETS AND TRANSPORTATION

APPROVED BY: TRAFFIC ENGINEER MANAGER

APPROVED DATE: 9/1/2021

CITY OF Vancouver WASHINGTON

SAFETY LIGHTING DIMMING CIRCUIT DETAIL

STANDARD PLAN NUMBER

T21−17

I:\CITYAPPS\AUTOCAD\STD_DETAILS\DRAWING_FILES\T21−17

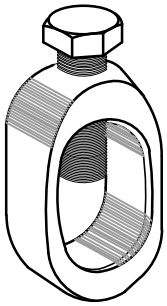

DIMENSIONS:

WIDTH (INCHES)	0.95
HEIGHT (INCHES)	2.19
SIZE (HEX) OR SIZE (BOLT)	3/8
SIZE (HEX) OR SIZE (BOLT)	0.38
B LENGTH (INCHES)	0.63

GENERAL:

PRODUCT DESCRIPTION
MECHANICAL GROUND ROD CLAMP FOR CABLE TO ROD, HIGH STRENGTH, 10 AWG (SOL) – 1 AWG (STR), 5/8" DRIVE ROD, 3/8" STUD.

CONDUCTORS:

ROD SIZE (RANGE)	5/8 INCH
COPPER SOLID SIZE (RANGE)	10 AWG
COPPER STRANDED (RANGE)	12 AWG – 1 AWG

PHYSICAL:

PRODUCT MATERIAL: COPPER

APPROVALS/CERTIFICATIONS:

RATED FOR DIRECT BURIAL	Y
UL LISTED	Y
CSA CERTIFIED	Y
ROHS COMPATIBLE	COMPLIANT
UL RECOGNIZED	N
CULUS	N
INDUSTRY STANDARDS	RUS

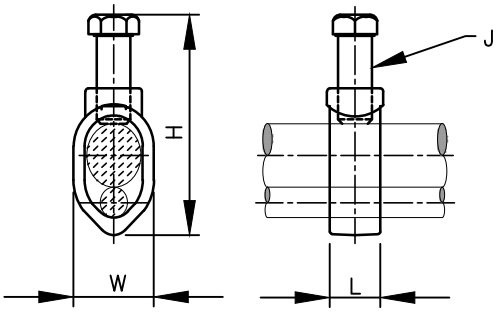

5/8 INCH GROUND ROD CLAMP

ROD DIAMETER (INCHES x LENGTH/(FT.))
5/8x8

THE POWER LINE HARDWARE GALVANIZED STANDARD GROUND ROD HAS A CORE OF AISI 1010–1029 HOT ROLLED CARBON STEEL. THE GROUND ROD IS CONE POINTED AND CHAMFERED ON THE END TO REDUCE "MUSHROOMING" DURING HAMMER DRIVEN INSTALLATION. HOT DIPPED GALVANIIZED GROUND ROD MUST MEET ASTM A 153 SPECIFICATIONS.

GROUND ROD

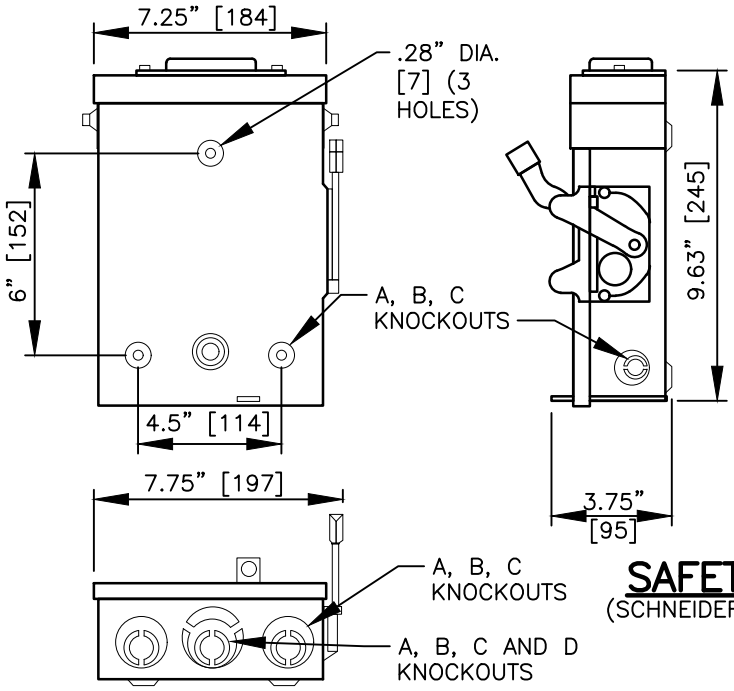

WIRING DIAGRAMS
NOT FUSIBLE

KNOCKOUTS				
SYMBOL	A	B	C	D
CONDUIT SIZE	0.50	0.75	1	1.25

APPROVED MATERIALS LIST:
SEE CITY OF VANCOUVER'S WEB SITE;
http://www.cityofvancouver.us/publicworks/page/transportation–development–review–information

SAFETY SWITCH BOX

(SCHNEIDER ELECTRIC PART #DU222RB)

SEE STREET LIGHT DISCONNECT DETAIL T21–18B AND T21–18C FOR ADDITIONAL INFORMATION.

REV NO.	DATE	BY	APPR
1	2/21	RAW	CJC
2	9/21	RAW	CJC

PUBLIC WORKS – STREETS AND TRANSPORTATION

APPROVED BY: TRAFFIC ENGINEER MANAGER
APPROVED DATE: 9/1/2021

CITY OF Vancouver WASHINGTON

STREET LIGHT DISCONNECT DETAIL

STANDARD PLAN NUMBER
T21–18A

I:\CITYAPPS\AUTOCAD\STD_DETAILS\DRAWING_FILES\T21–18A

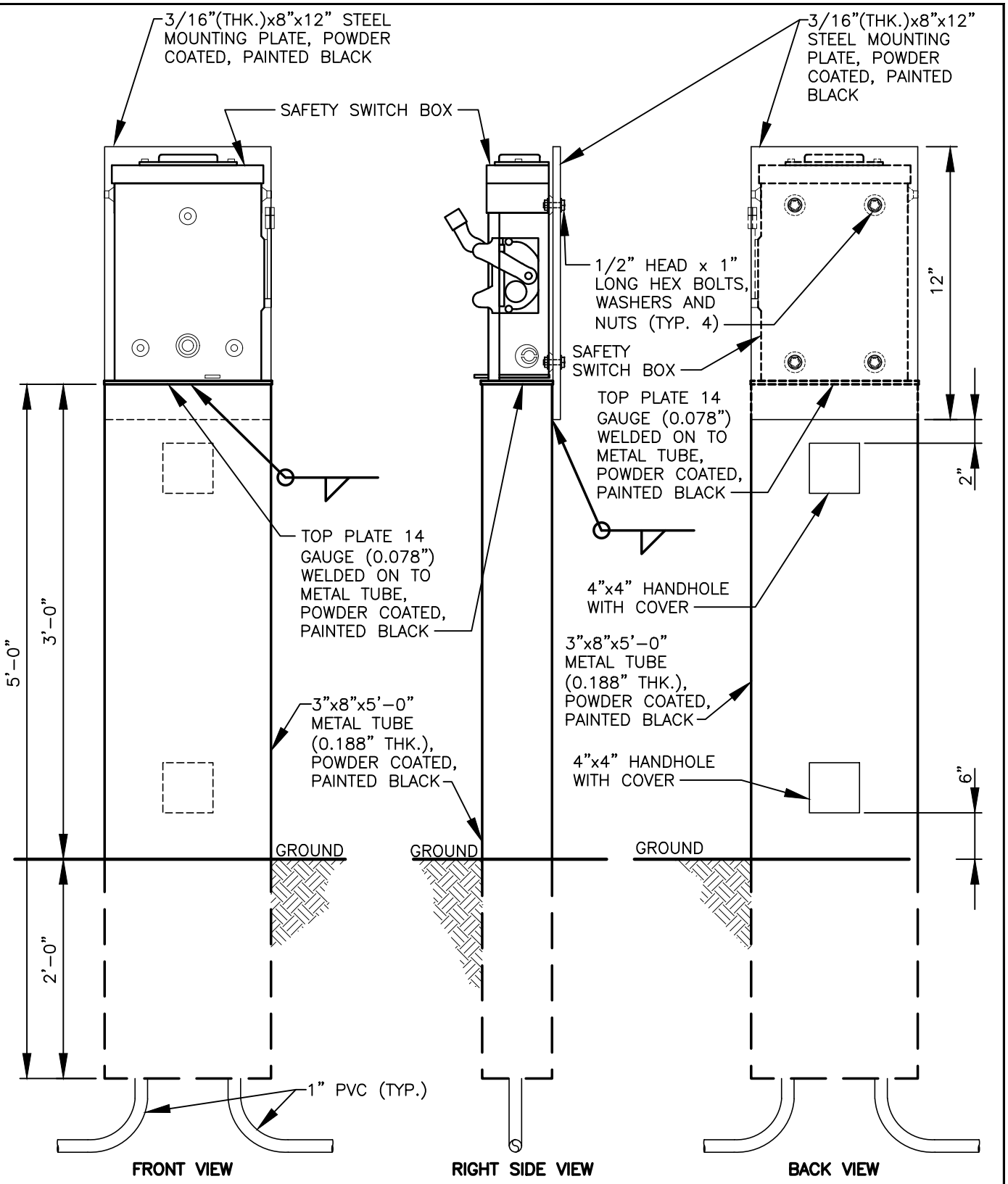

NOTES:

1. CONTRACTOR MUST BE UL APPROVED AND UL 508 CERTIFIED TO BUILD AND INSTALL.
2. SAFETY SWITCH BOX SHALL BE SCHNEIDER ELECTRIC PART #DU222RB OR APPROVED EQUAL.

REV NO.	DATE	BY	APPR
1	2/21	RAW	CJC
2	9/21	RAW	CJC

PUBLIC WORKS – STREETS AND TRANSPORTATION

APPROVED BY: TRAFFIC ENGINEER MANAGER

APPROVED DATE: 9/1/2021

CITY OF Vancouver WASHINGTON

STREET LIGHT DISCONNECT DETAIL

STANDARD PLAN NUMBER

T21-18B

I:\CITYAPPS\AUTOCAD\STD_DETAILS\DRAWING_FILES\T21-18B

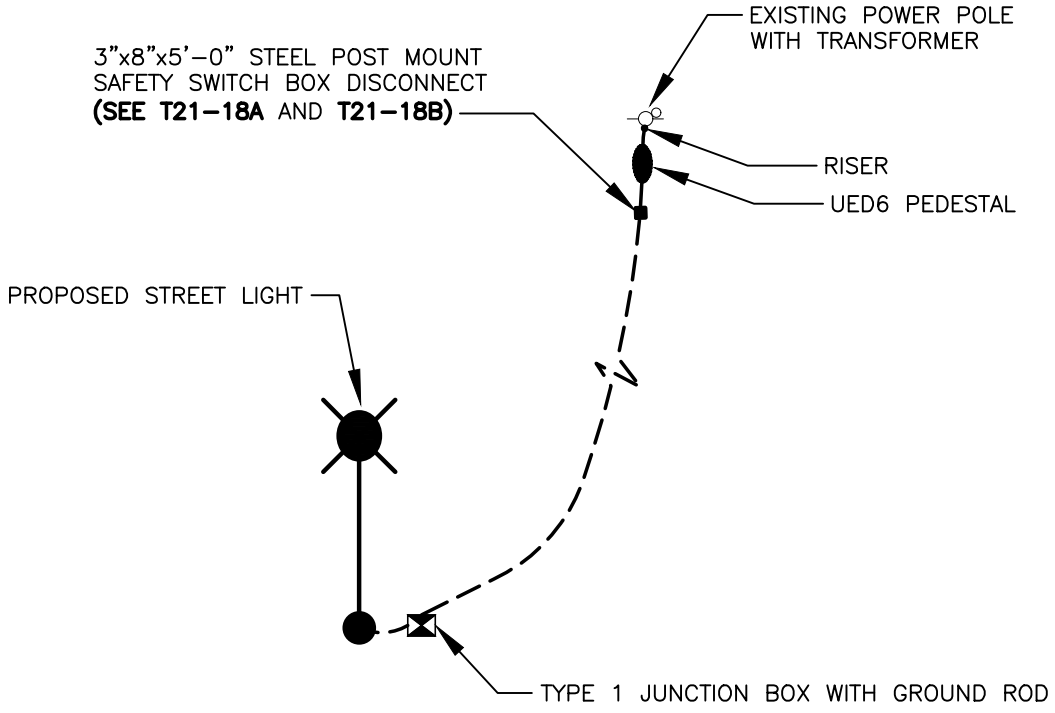

GENERAL NOTES:

1. DISCONNECT NEEDS TO BE MOUNTED ON A 4X6 PRESSURE TREATED POST, BETWEEN 4' TO 5' ABOVE GROUND NEAR THE TRANSFORMER OR POWER PEDESTAL FROM WHICH THE SERVICE WILL BE GETTING POWER FROM.
2. INSTALL TYPE 1 J-BOX NEXT TO ALL STREET LIGHT POLES.
3. INSTALL GROUND ROD IN J-BOX NEXT TO LIGHT POLE.
4. 1 1/4" CONDUIT FOR ALL CONDUIT RUNS.
5. CONDUITS NEED TO BE RAN FROM TRANSFORMER/CPU PEDESTAL TO DISCONNECT, FROM DISCONNECT TO JBOX AND FROM JBOX TO LIGHT POLE. IF THERE ARE MORE THAN ONE STREET LIGHT ON THIS CIRCUIT, THE CIRCUIT NEEDS TO BE DAISY CHAINED FROM THE FIRST J-BOX NEAREST THE DISCONNECT.
6. ONLY STRANDED COPPER WIRE, NO ALUMINUM.

REV NO.	DATE	BY	APPR
1	2/21	RAW	CJC
2	9/21	RAW	CJC

PUBLIC WORKS – STREETS AND TRANSPORTATION

APPROVED BY: TRAFFIC ENGINEER MANAGER

APPROVED DATE: 9/1/2021

CITY OF Vancouver WASHINGTON

STREET LIGHT DISCONNECT DETAIL

STANDARD PLAN NUMBER

T21-18C

I:\CITYAPPS\AUTOCAD\STD_DETAILS\DRAWING_FILES\T21-18C

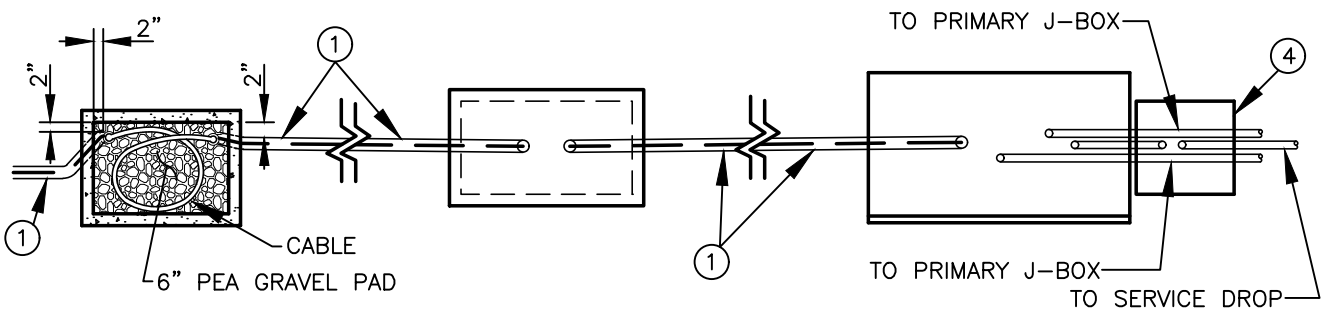

TOP VIEW JUNCTION BOX **TOP VIEW F.O.T.C.** **TOP VIEW SERVICE CABINET**

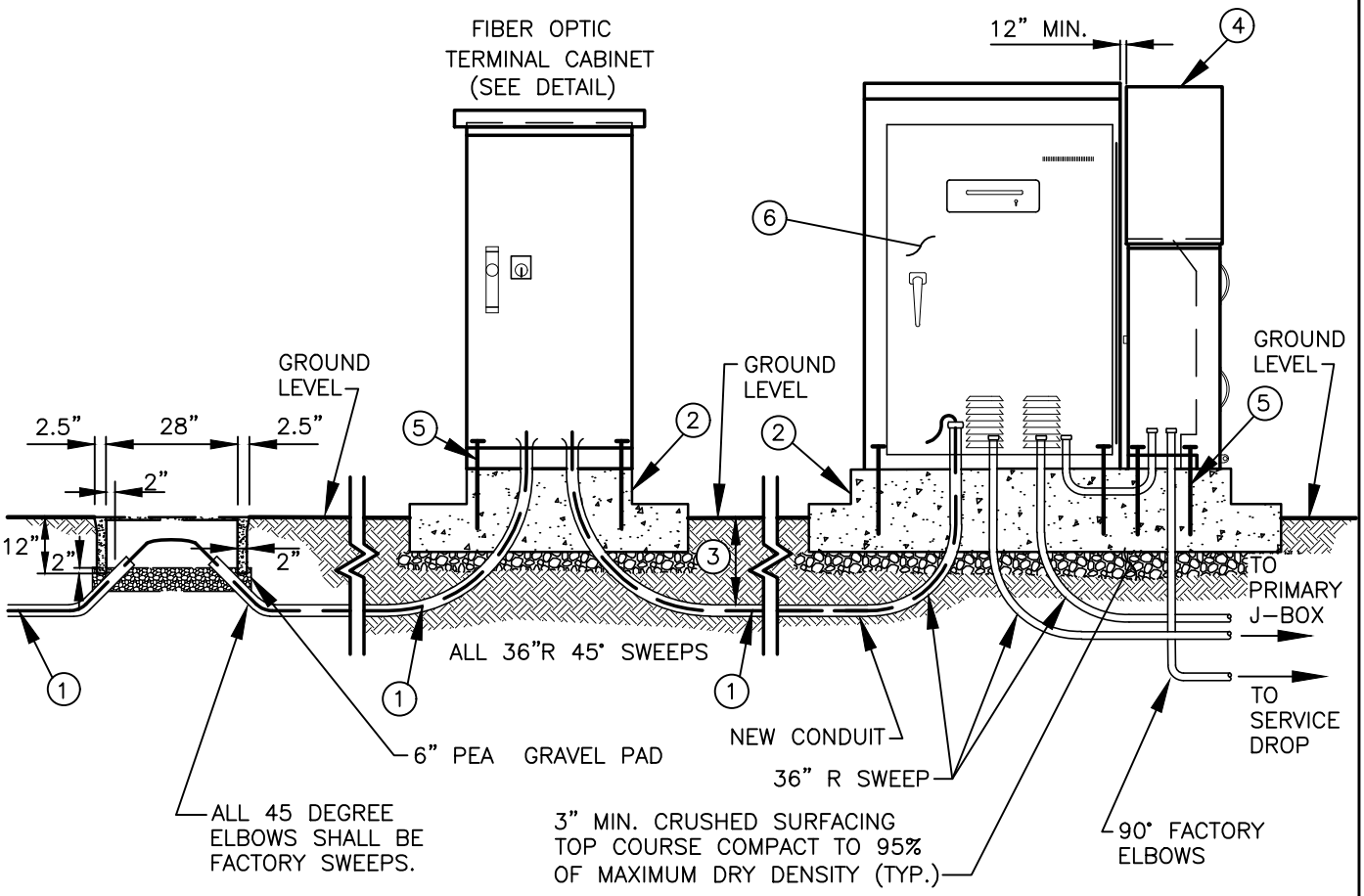

NOTE:

1. PVC INTERCONNECT CONDUIT WITH DETECTABLE MULE TAPE. (SEE PLANS AND SPECIFICATIONS).
2. SEE STANDARD PLAN T20-38E AND STANDARD SPECIFICATIONS FOR FOUNDATION AND PAD DEPTH AND SIZE.
3. SEE STANDARD SPECIFICATIONS FOR DEPTH.
4. LOCATE SERVICE PEDESTAL SIDE ADJACENT TO CONTROLLER CABINET OR MOVE MORE THAN 20' AWAY. HANDLES SHALL POINT OUTWARD. METER OPENING SHALL FACE STREET.
5. MOUNTING BOLTS INSIDE CABINET. NUTS, BOLTS AND SCREWS WILL NOT BE VISIBLE FROM OUTSIDE OF ENCLOSURE.
6. SERVICE CABINET DOOR.

REV NO.	DATE	BY	APPR
1	3/06	RAW	AGE
2	2/07	RAW	AGE
3	8/08	RAW	AGE
4	7/14	RAW	CJC
5	4/18	RAW	CJC
6	9/21	RAW	CJC

PUBLIC WORKS – STREETS AND TRANSPORTATION

APPROVED BY: TRAFFIC ENGINEER MANAGER

APPROVED DATE: 9/1/2021

CITY OF Vancouver WASHINGTON

TYPICAL INTERCONNECT CONDUIT AND CABLE INSTALLATION

STANDARD PLAN NUMBER

T22-01

I:\CITYAPPS\AUTOCAD\STD_DETAILS\DRAWING_FILES\T22-01

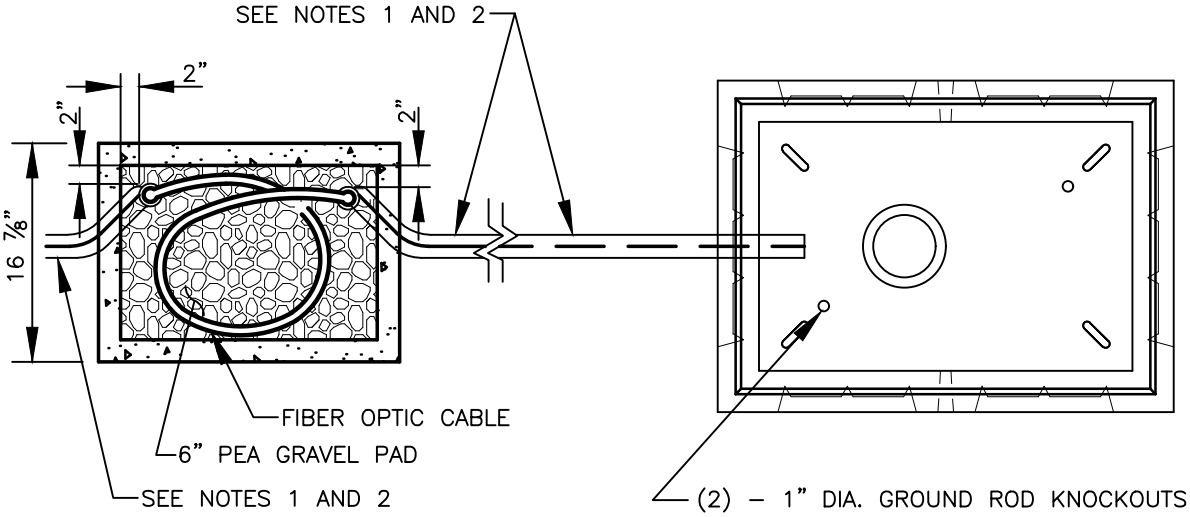

TOP VIEW JUNCTION BOX

TOP VIEW SPLICE VAULT

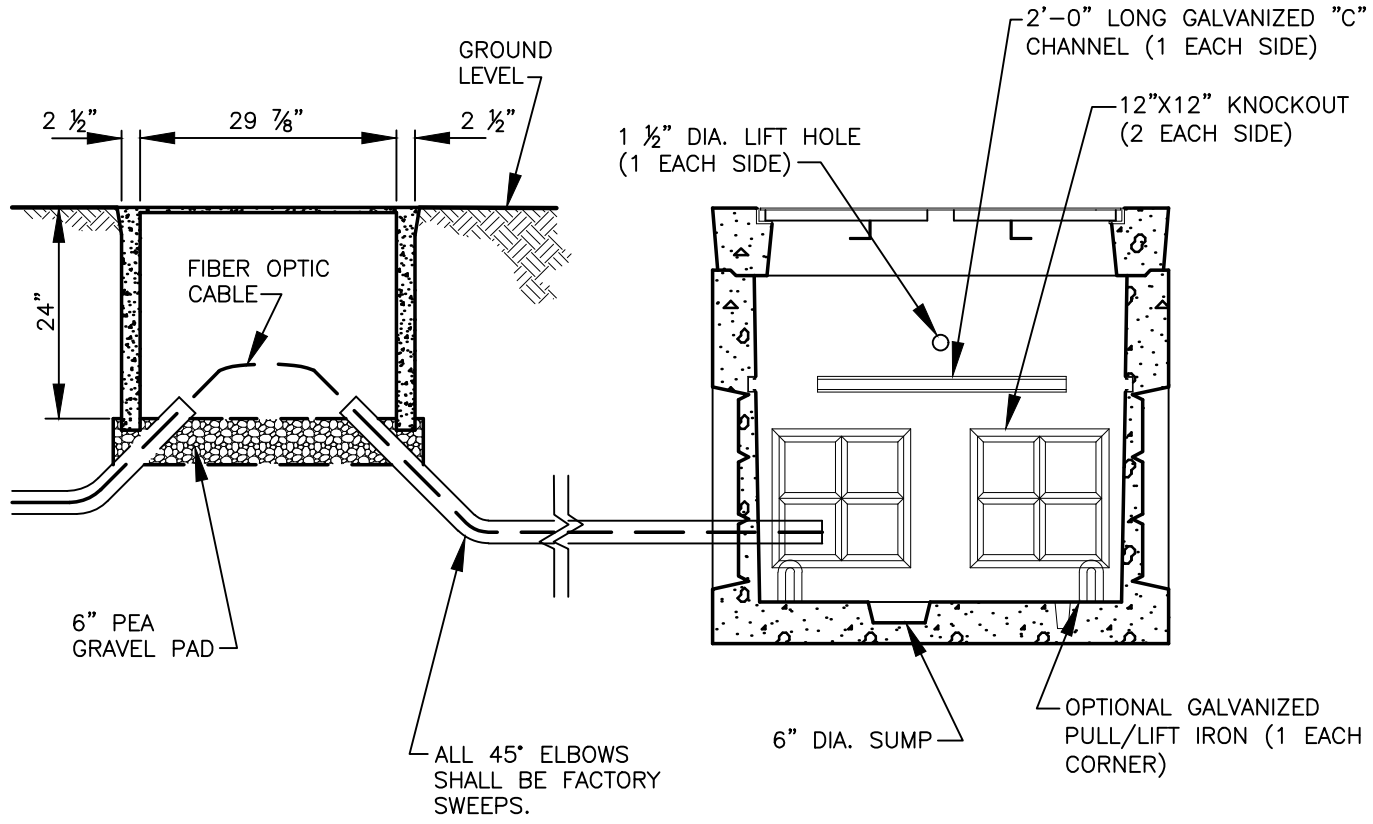

NOTES:

1. SEE STANDARD SPECIFICATIONS FOR CONDUIT DEPTH.
2. SEE PLANS AND SPECIFICATIONS FOR CONDUIT SIZE.

REV NO.	DATE	BY	APPR
1	3/06	RAW	AGE
2	2/07	RAW	AGE
3	8/08	RAW	AGE
4	1/15	RAW	CJC
5	2/21	OIS	CJC
6	9/21	RAW	CJC

PUBLIC WORKS – STREETS AND TRANSPORTATION

APPROVED BY: TRAFFIC ENGINEER MANAGER

APPROVED DATE: 9/1/2021

CITY OF Vancouver WASHINGTON

INTERCONNECT JUNCTION BOX TO PULL BOX DETAIL

STANDARD PLAN NUMBER

T22–03

I:\CITYAPPS\AUTOCAD\STD_DETAILS\DRAWING_FILES\T22–03

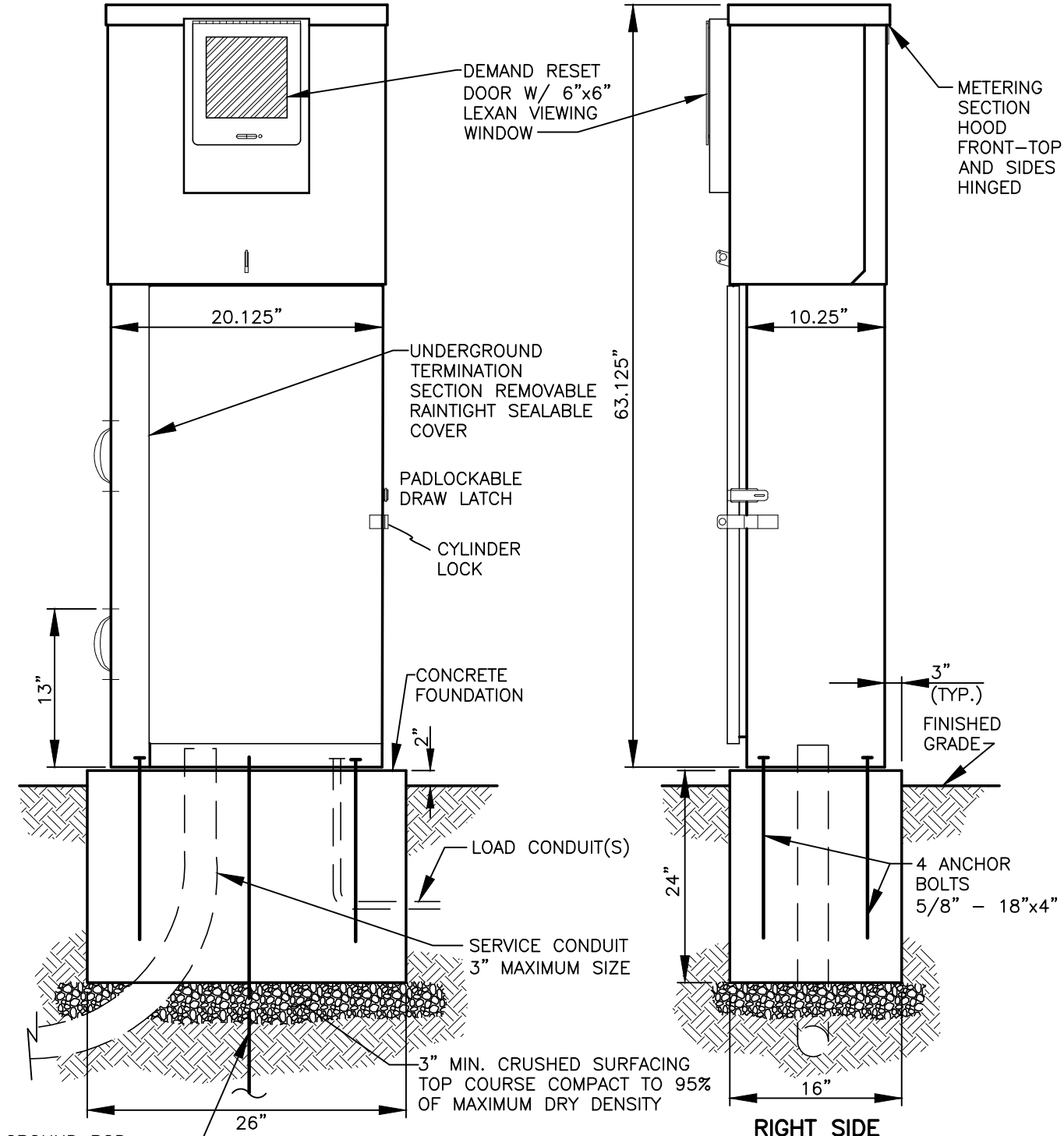

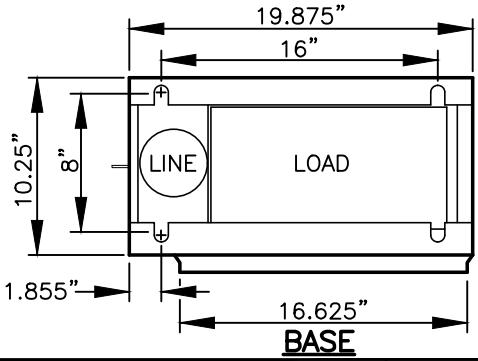

BASE

NOTES

1. SEE SERVICE ENCLOSURE REQUIREMENTS ON DETAIL **T20–41**.
2. SEE WIRING DIAGRAM ON DETAIL **T23–01B**.
3. ENCLOSURE SHALL BE TESCO CLASS 26–000M–A OR CITY APPROVED EQUAL PRIOR TO BID.

REV NO.	DATE	BY	APPR
1	3/06	RAW	AGE
2	2/07	RAW	AGE
3	8/08	RAW	AGE
4	1/15	RAW	CJC
5	7/18	RAW	CJC
6	9/21	RAW	CJC

PUBLIC WORKS – STREETS AND TRANSPORTATION

APPROVED BY: TRAFFIC ENGINEER MANAGER

APPROVED DATE: 9/1/2021

CITY OF Vancouver WASHINGTON

CABINET DETAIL FOR PEDESTRIAN CROSSING

STANDARD PLAN NUMBER T23–01A

I:\CITYAPPS\AUTOCAD\STD_DETAILS\DRAWING_FILES\T23–01A

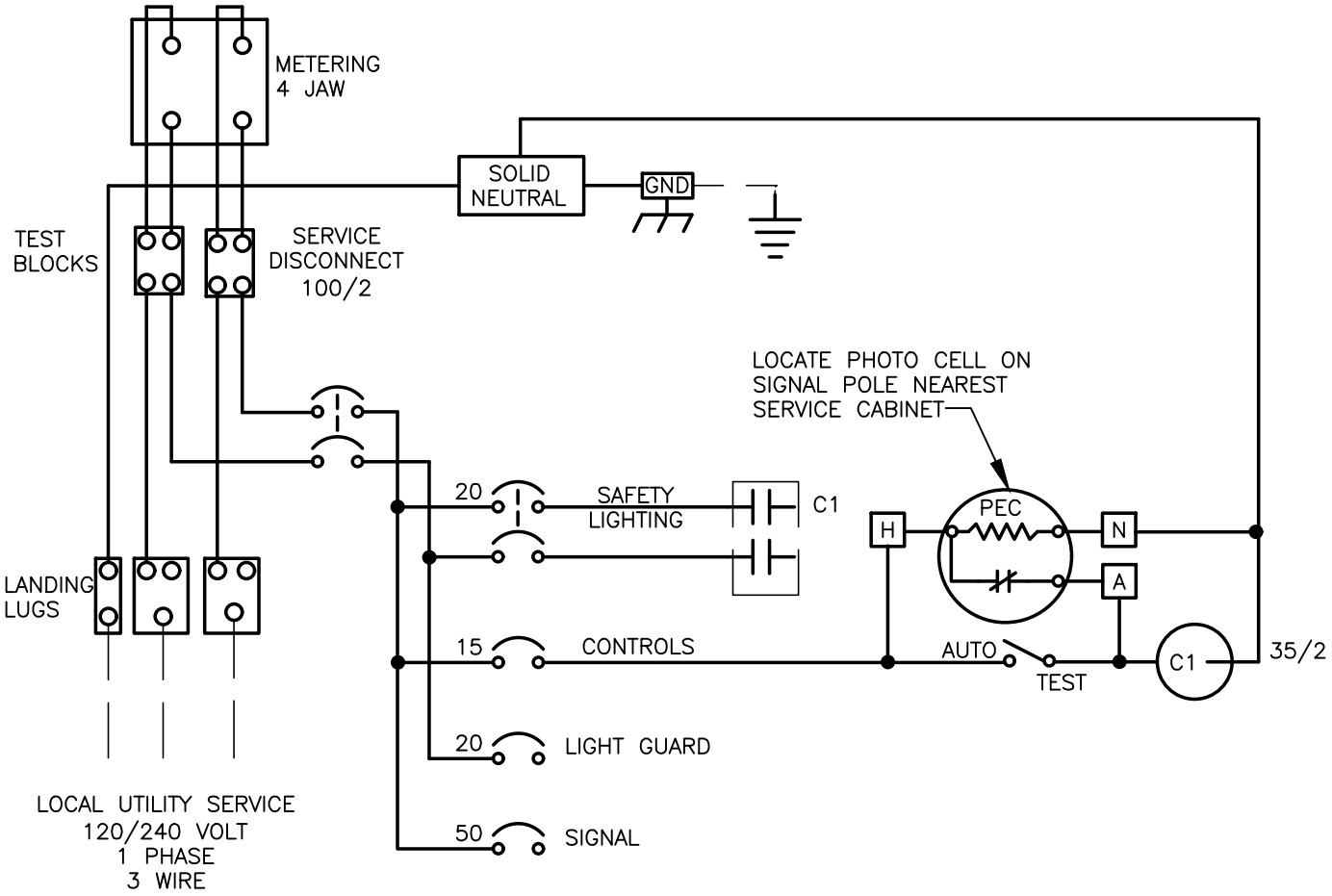

NOTE:

SEE DETAIL **T23–01A** FOR CROSSWALK ENCLOSURE ELECTRICAL CABINET DETAIL.

REV NO.	DATE	BY	APPR
1	8/04	RAW	AGE
2	3/06	RAW	AGE
3	2/07	RAW	AGE
4	8/08	RAW	AGE
5	1/15	RAW	CJC
6	9/21	RAW	CJC

PUBLIC WORKS – STREETS AND TRANSPORTATION

APPROVED BY: TRAFFIC ENGINEER MANAGER

APPROVED DATE: 9/1/2021

CITY OF Vancouver WASHINGTON

CABINET DETAIL FOR PEDESTRIAN CROSSING WIRING DIAGRAM

STANDARD PLAN NUMBER

T23–01B

I:\CITYAPPS\AUTOCAD\STD_DETAILS\DRAWING_FILES\T23-01B

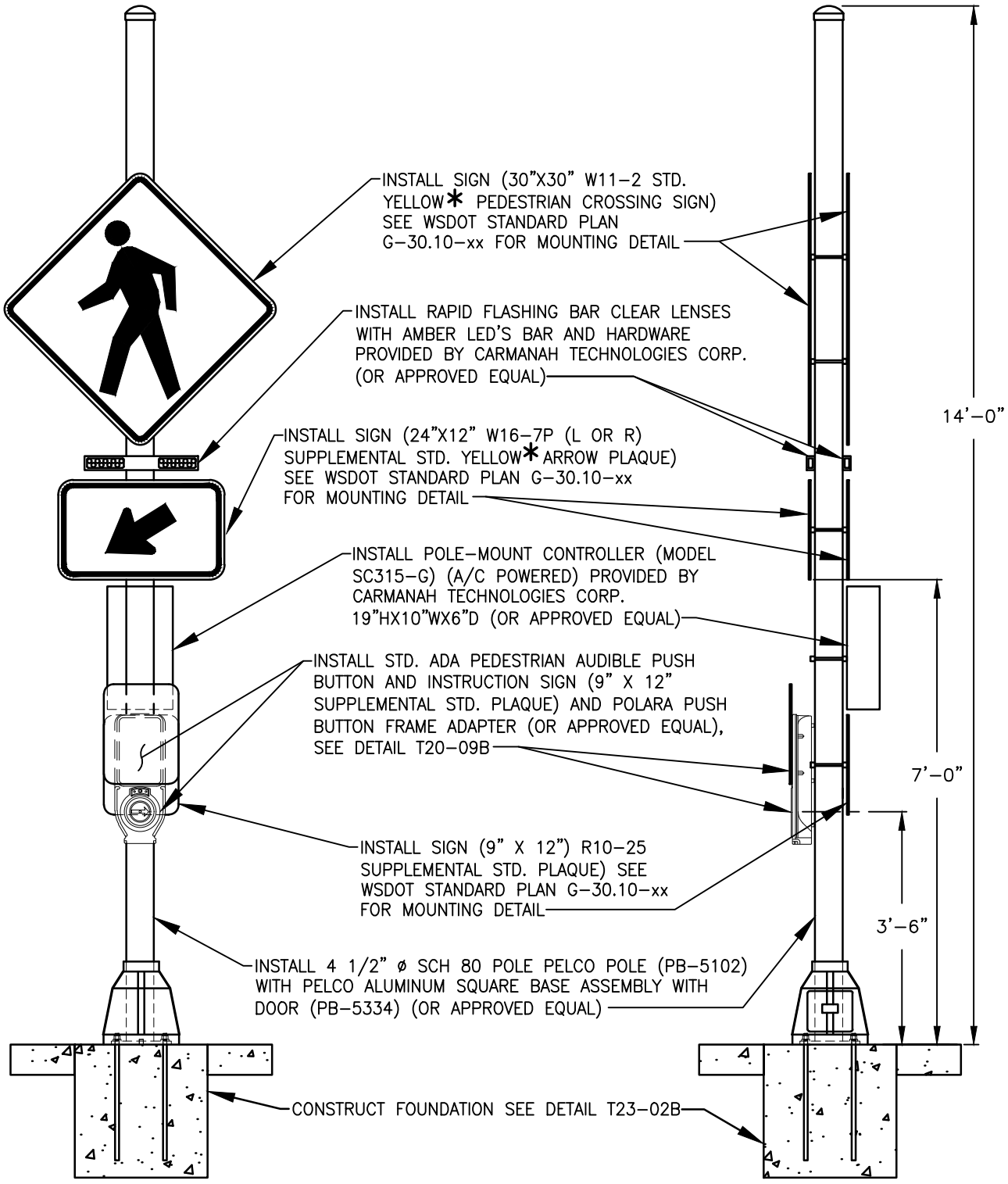

*"YELLOW" SIGNS IN SCHOOL ZONE ARE FLUORESCENT YELLOW-GREEN.

REV NO.	DATE	BY	APPR
1	1/15	RAW	CJC
2	3/16	RAW	CJC
3	3/17	RAW	CJC
4	7/19	RAW	CJC
5	9/21	RAW	CJC

PUBLIC WORKS – STREETS AND TRANSPORTATION

APPROVED BY: TRAFFIC ENGINEER MANAGER

APPROVED DATE: 9/1/2021

CITY OF Vancouver WASHINGTON

RECTANGULAR RAPID FLASHING BEACON ASSEMBLY DETAIL

STANDARD PLAN NUMBER

T23-02A

I:\CITYAPPS\AUTOCAD\STD_DETAILS\DRAWING_FILES\T23-02A

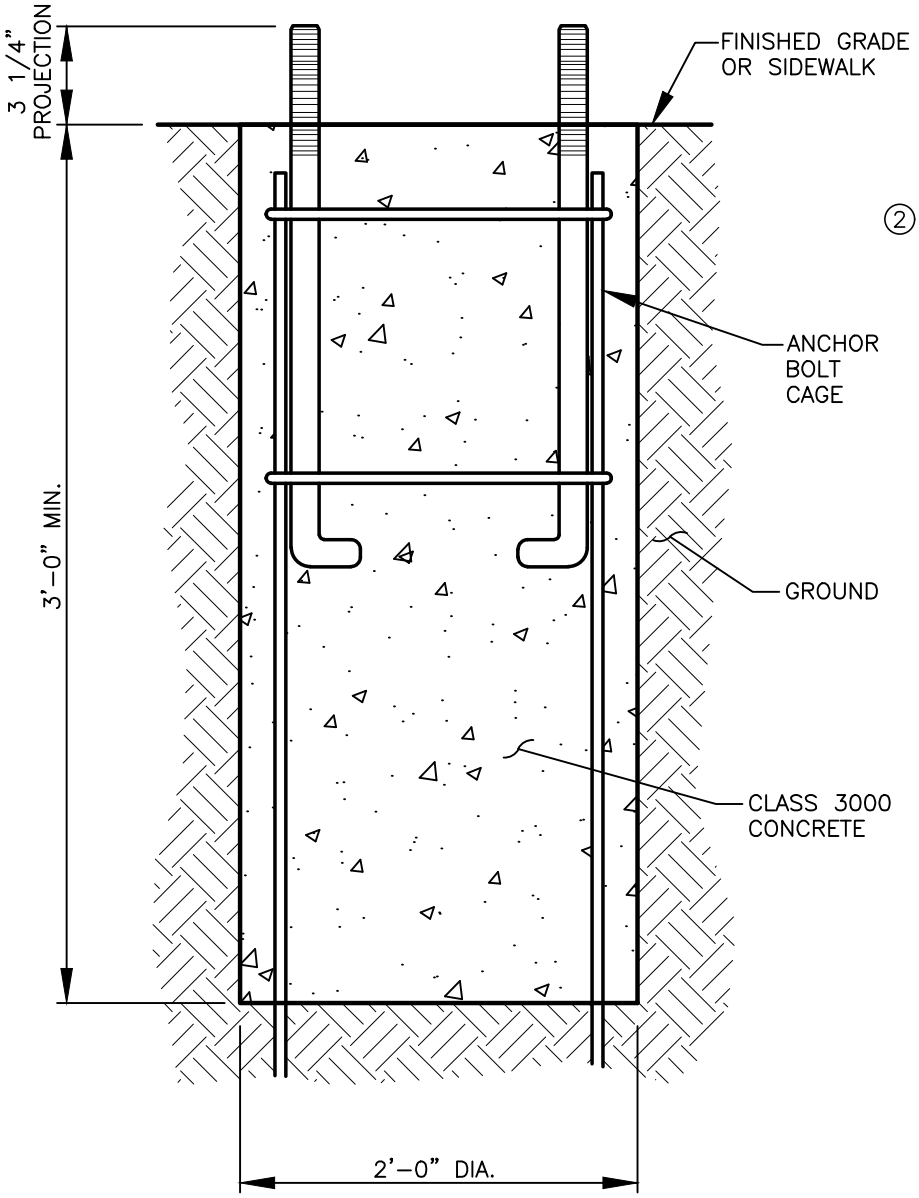

FOUNDATION DETAIL

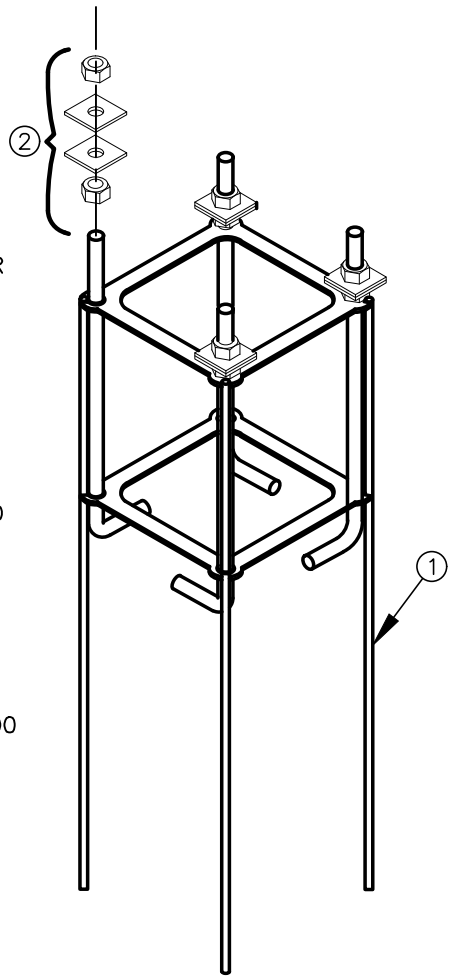

ANCHOR BOLT CAGE DETAIL

NOTES:

1. ANCHOR BOLT CAGE, WITH 3/4" – 10 BOLTS x 18", 36" REBAR, 13" BC STEEL, GALVANIZED.
2. HARDWARE KIT, ANCHOR BOLT CAGE, 3/4" – 10NC WITH SQUARE WASHERS, STEEL GALVANIZED.

REV NO.	DATE	BY	APPR
1	1/15	RAW	CJC
2	7/19	RAW	CJC
3	9/21	RAW	CJC

PUBLIC WORKS – STREETS AND TRANSPORTATION

APPROVED BY: TRAFFIC ENGINEER MANAGER

APPROVED DATE: 9/1/2021

CITY OF Vancouver WASHINGTON

RETANGULAR RAPID FLASHING BEACON FOUNDATION DETAIL

STANDARD PLAN NUMBER

T23–02B

I:\CITYAPPS\AUTOCAD\STD_DETAILS\DRAWING_FILES\T23-02B

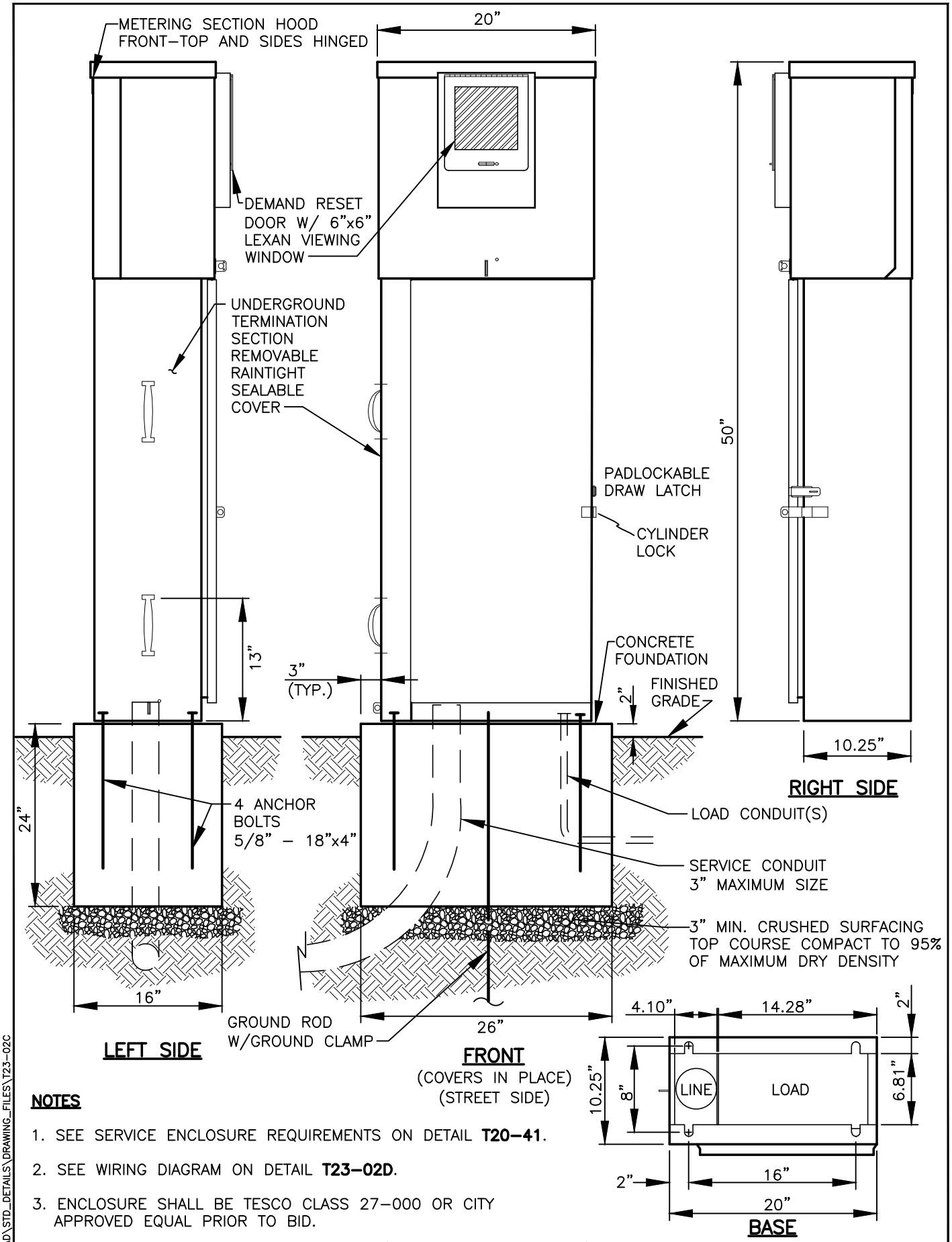

NOTES

1. SEE SERVICE ENCLOSURE REQUIREMENTS ON DETAIL **T20–41**.
2. SEE WIRING DIAGRAM ON DETAIL **T23–02D**.
3. ENCLOSURE SHALL BE TESCO CLASS 27–000 OR CITY APPROVED EQUAL PRIOR TO BID.

REV NO.	DATE	BY	APPR
1	1/15	RAW	CJC
2	4/18	RAW	CJC
3	7/18	RAW	CJC
4	7/19	RAW	CJC
5	9/21	RAW	CJC

PUBLIC WORKS – STREETS AND TRANSPORTATION

APPROVED BY: TRAFFIC ENGINEER MANAGER

APPROVED DATE: 9/1/2021

CITY OF Vancouver WASHINGTON

RETANGULAR RAPID FLASHING BEACON SERVICE CABINET DETAIL

STANDARD PLAN NUMBER

T23–02C

I:\CITYAPPS\AUTOCAD\STD_DETAILS\DRAWING_FILES\T23–02C

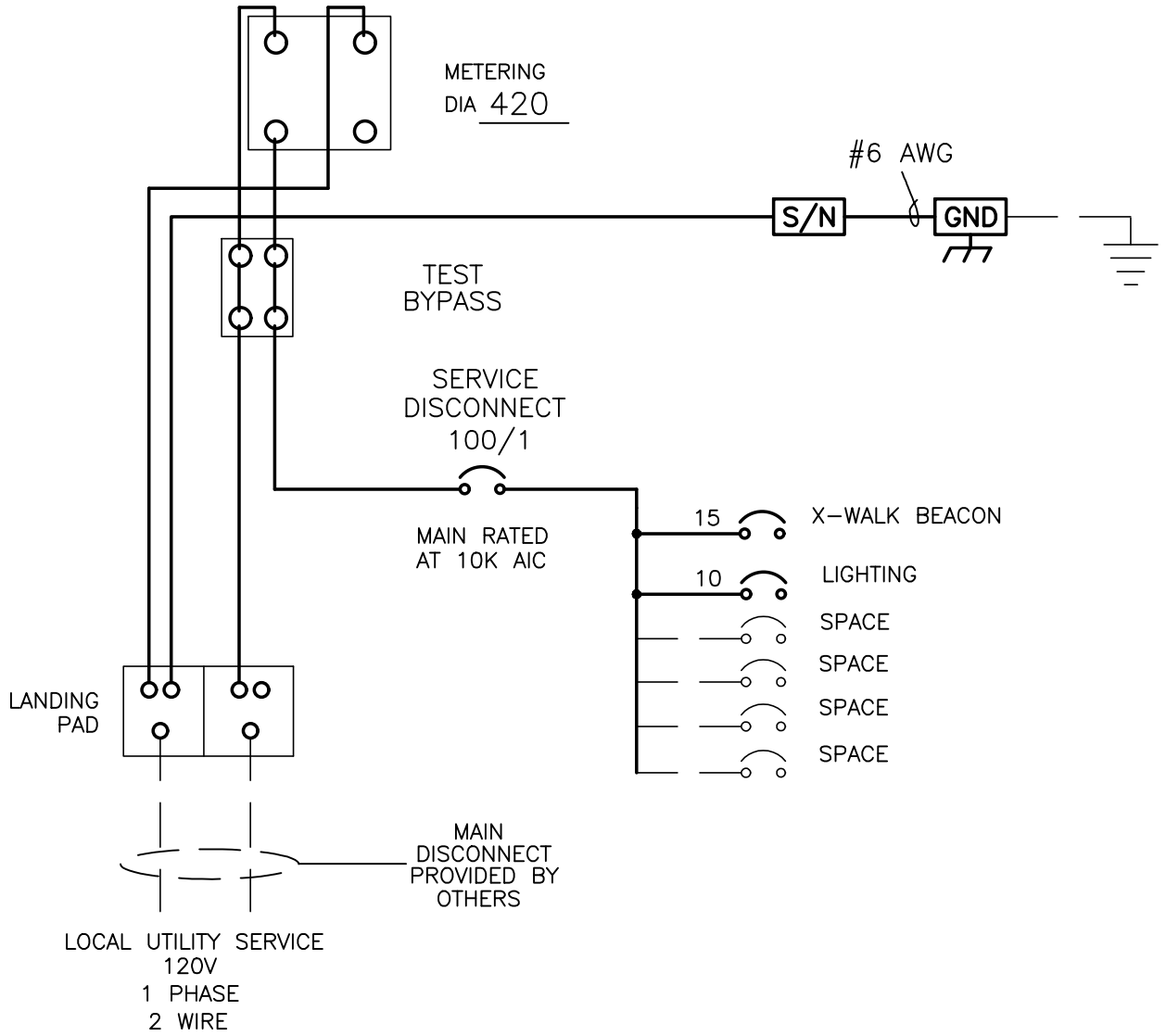

NOTE: LOAD CURRENT FOR ALL BREAKER NOT TO EXCEED 80% OF BREAKER AMPERAGE

NOTES:

1. SEE SERVICE ENCLOSURE REQUIREMENTS ON DETAIL **T23-02C**.

REV NO.	DATE	BY	APPR
1	1/15	RAW	CJC
2	7/19	RAW	CJC
3	9/21	RAW	CJC

PUBLIC WORKS – STREETS AND TRANSPORTATION

APPROVED BY: TRAFFIC ENGINEER MANAGER

APPROVED DATE: 9/1/2021

CITY OF Vancouver WASHINGTON

RETANGULAR RAPID FLASHING BEACON SERVICE CABINET WIRING DIAGRAM

STANDARD PLAN NUMBER

T23-02D

I:\CITYAPPS\AUTOCAD\STD_DETAILS\DRAWING_FILES\T23-02D

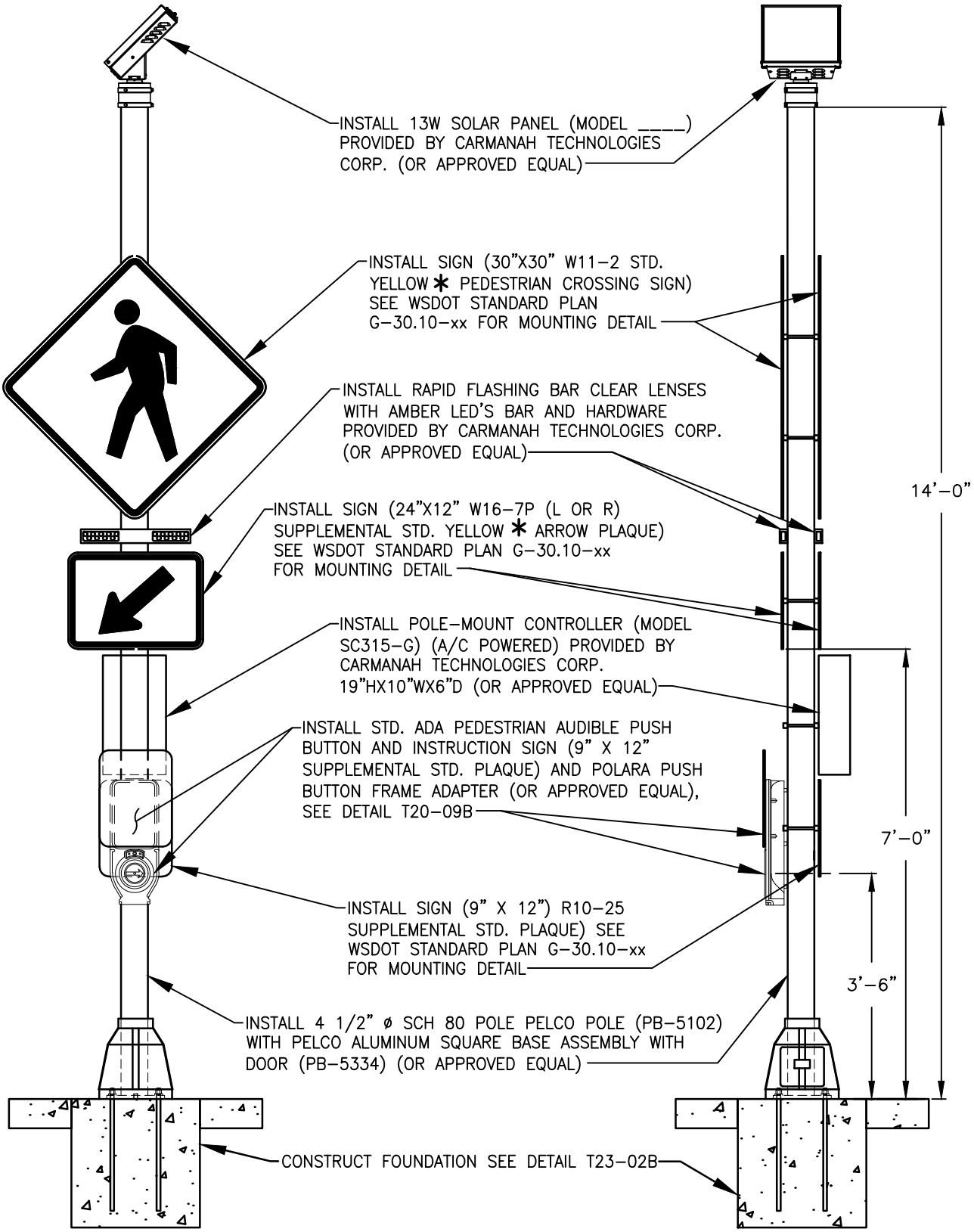

*"YELLOW" SIGNS IN SCHOOL ZONE ARE FLUORESCENT YELLOW-GREEN.

REV NO.	DATE	BY	APPR
1	7/19	RAW	CJC
2	9/21	RAW	CJC

PUBLIC WORKS – STREETS AND TRANSPORTATION

APPROVED BY: TRAFFIC ENGINEER MANAGER

APPROVED DATE: 9/1/2021

CITY OF Vancouver WASHINGTON

RECTANGULAR RAPID FLASHING BEACON ASSEMBLY WITH SOLAR MOUNTED POWER SOURCE

STANDARD PLAN NUMBER

T23-03

I:\CITYAPPS\AUTOCAD\STD_DETAILS\DRAWING_FILES\T23-03

I:\CITYAPPS\AUTOCAD\STD_DETAILS\DRAWING_FILES\T24-01A

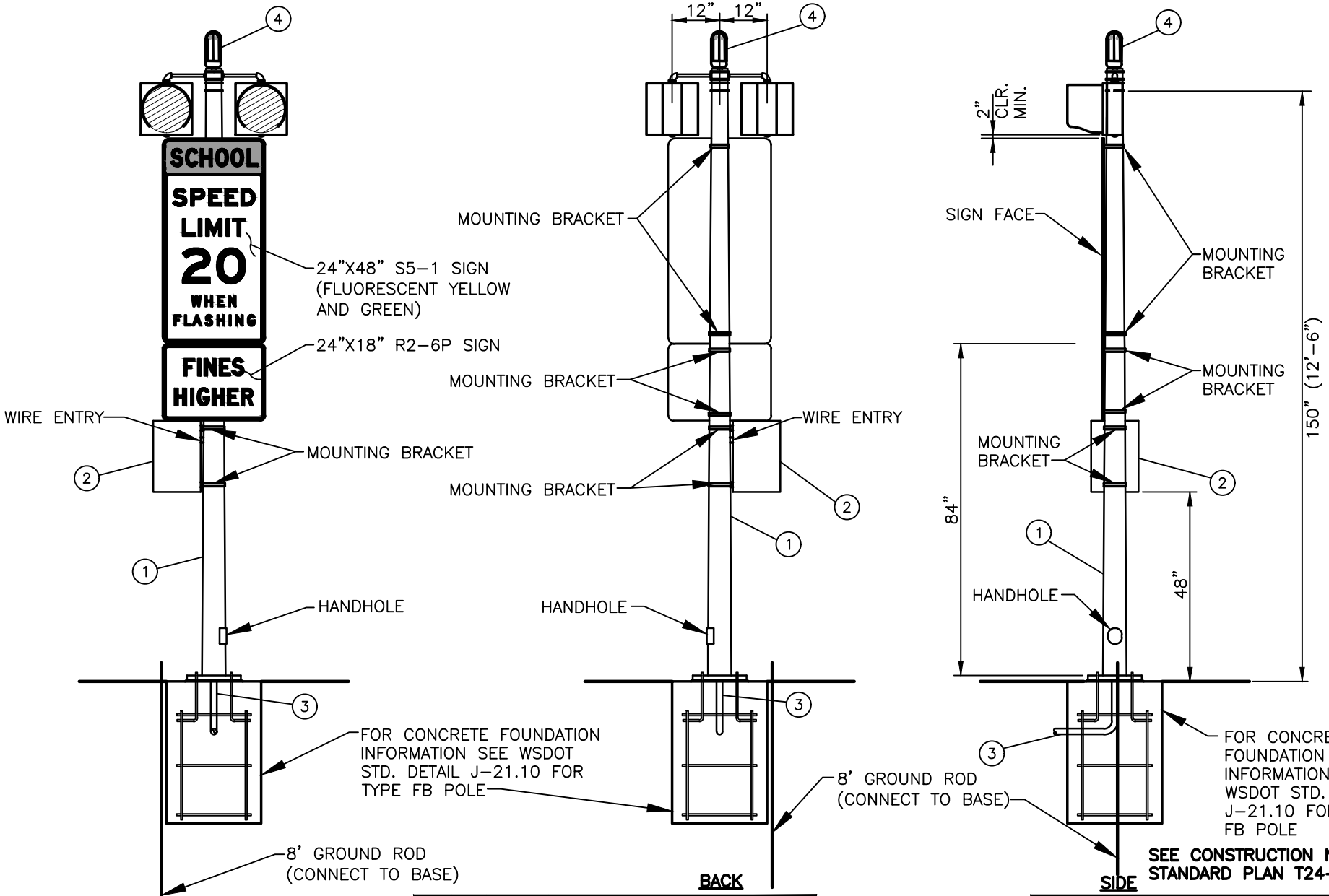

SEE CONSTRUCTION NOTES ON STANDARD PLAN T24-01B.

REV NO.	DATE	BY	APPR
1	2/21	OIS	CJC
2	9/21	RAW	CJC

PUBLIC WORKS – STREETS AND TRANSPORTATION

APPROVED BY: TRAFFIC ENGINEER MANAGER

APPROVED DATE: 9/1/2021

CITY OF Vancouver WASHINGTON

SCHOOL FLASHER STANDARD DETAIL VIEWS

STANDARD PLAN NUMBER

T24-01A

NOTES:

IN ACCORDANCE WITH RCW 19.122 "UNDERGROUND UTILITIES", THE CONTRACTOR, PRIOR TO COMMENCING ANY EXCAVATION, SHALL PROVIDE NOTICE OF THE SCHEDULED EXCAVATION TO ALL OWNERS OF UNDERGROUND FACILITIES BY CALLING THE CLARK COUNTY UTILITY COORDINATING COUNCIL'S "ONE CALL" NUMBER 1-800-424-5555. THE NOTICE SHALL BE GIVEN TO THE OWNERS OF THE FACILITIES NOT LESS THAN TWO BUSINESS DAYS OR MORE THAN 10 BUSINESS DAYS BEFORE EXCAVATION. THIS NOTICE SHALL BE PROVIDED PRIOR TO TRENCHING AND EXCAVATION FOR THE FOUNDATION.

THE CONTRACTOR IS RESPONSIBLE FOR CONTACTING CLARK PUBLIC UTILITIES FOR NEW ELECTRICAL SERVICE.

FOR CONNECTION TO EXISTING LIGHT POLE, POWER IS TO BE CONNECTED AT THE BASE OF THE LIGHT POLE.

THE CONTRACTOR IS RESPONSIBLE FOR OBTAINING ELECTRICAL PERMITS FROM COMMUNITY AND ECONOMIC DEVELOPMENT DEPARTMENT AT 415 W. 6TH ST.

PAGER SYSTEM SHALL BE ELTEC TC2000.

GENERAL NOTES:

SIGN COLORS: PER MUTCD 7B.07 "SCHOOL WARNING SIGNS, INCLUDING THE 'SCHOOL' PORTION OF THE SCHOOL SPEED LIMIT (S5-1) SIGN AND INCLUDING ANY SUPPLEMENTAL PLAQUES USED IN ASSOCIATION WITH THESE WARNING SIGNS, SHALL HAVE A FLUORESCENT YELLOW-GREEN BACKGROUND WITH A BLACK LEGEND AND BORDER UNLESS OTHERWISE PROVIDED IN THIS MANUAL FOR A SPECIFIC SIGN.

SEE **T24-01A SCHOOL FLASHER VIEWS.**

SEE **T24-01C CONTROLLER CABINET DETAIL**.

SEE **T24-01E OPTIONAL MOUNTING AND POWER CONNECTION OPTIONS**.

SEE **T24-01D WIRING DIAGRAM**.

CONSTRUCTION NOTES:

1. CITY OF VANCOUVER TYPE I STANDARD 12'-6" IN LENGTH.
2. SEE **T24-01C CONTROLLER CABINET DETAIL**.
3. 1 1/2" DIA. CONDUIT.
4. SEE INDICATION LIGHT DETAIL.
5. TOP MOUNT SEE WSDOT DETAIL J-21.16.

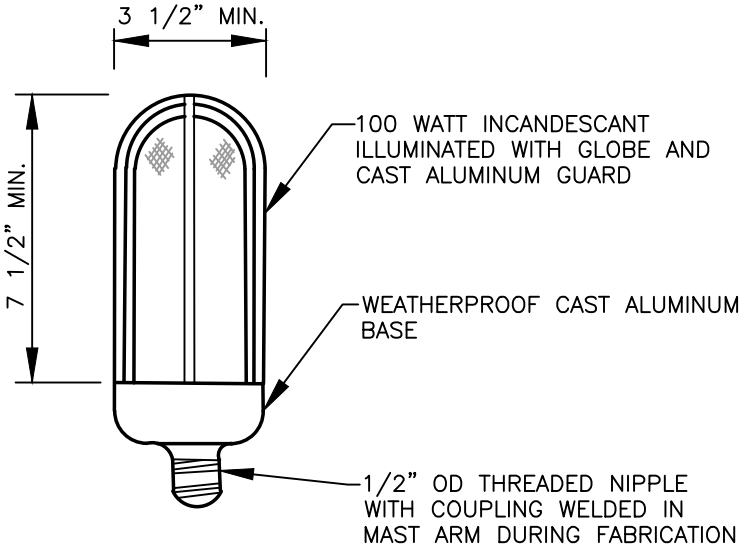

INDICATION LIGHT DETAIL

REV NO.	DATE	BY	APPR
1	2/21	OIS	CJC
2	9/21	RAW	CJC

PUBLIC WORKS - STREETS AND TRANSPORTATION

APPROVED BY: TRAFFIC ENGINEER MANAGER

APPROVED DATE: 9/1/2021

CITY OF Vancouver WASHINGTON

SCHOOL FLASHER STANDARD DETAIL CONSTRUCTION NOTES AND INDICATOR LIGHT DETAIL

STANDARD PLAN NUMBER

T24-01B

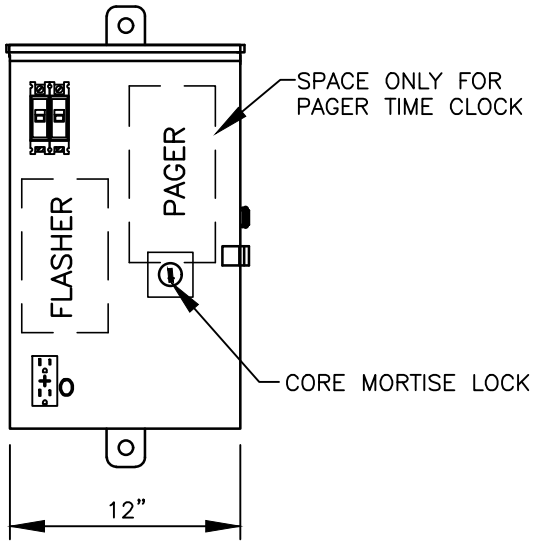

FRONT VIEW

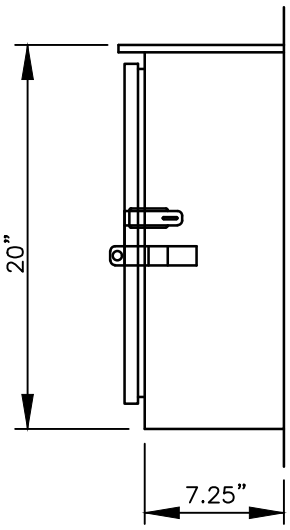

RIGHT SIDE

ENCLOSURE CONSTRUCTION NOTES

1. EXTERIOR, 1/8" ALUMINUM, AND INTERIOR 14 GA COLD ROLLED STEEL ELECTRICALLY WELDED AND REINFORCED WHERE REQUIRED.
2. CONSTRUCTION WILL BE NEMA 3R, RAINTIGHT.
3. ALL NUTS, BOLTS AND SCREWS WILL BE STAINLESS STEEL.
4. NUTS, BOLTS AND SCREWS WILL NOT BE VISIBLE FROM OUTSIDE OF ENCLOSURE.
5. NAMEPLATES WILL BE PROVIDED AS REQUIRED.
6. CONTROL WIRING WILL BE MARKED AT BOTH ENDS BY PERMANENT WIRE MARKERS.
7. A PLASTIC COVERED WIRING DIAGRAM WILL BE ATTACHED TO THE INSIDE OF THE FRONT DOOR.
8. ENCLOSURE WILL BE FACTORY WIRED AND CONFORM TO REQUIRED NEMA STANDARDS.
9. COLOR TO BE SPECIFIED PER JOB, PER CITY OF VANOCUVER'S TRAFFIC ENGINEER OR PROJECT MANAGER.

REV NO.	DATE	BY	APPR
1	2/21	OIS	CJC
2	9/21	RAW	CJC

PUBLIC WORKS – STREETS AND TRANSPORTATION

APPROVED BY: TRAFFIC ENGINEER MANAGER

APPROVED DATE: 9/1/2021

CITY OF Vancouver WASHINGTON

SCHOOL FLASHING STANDARD DETAILS CONTROL CABINET DETAIL

STANDARD PLAN NUMBER

T24–01C

I:\CITYAPPS\AUTOCAD\STD_DETAILS\DRAWING_FILES\T24-01C

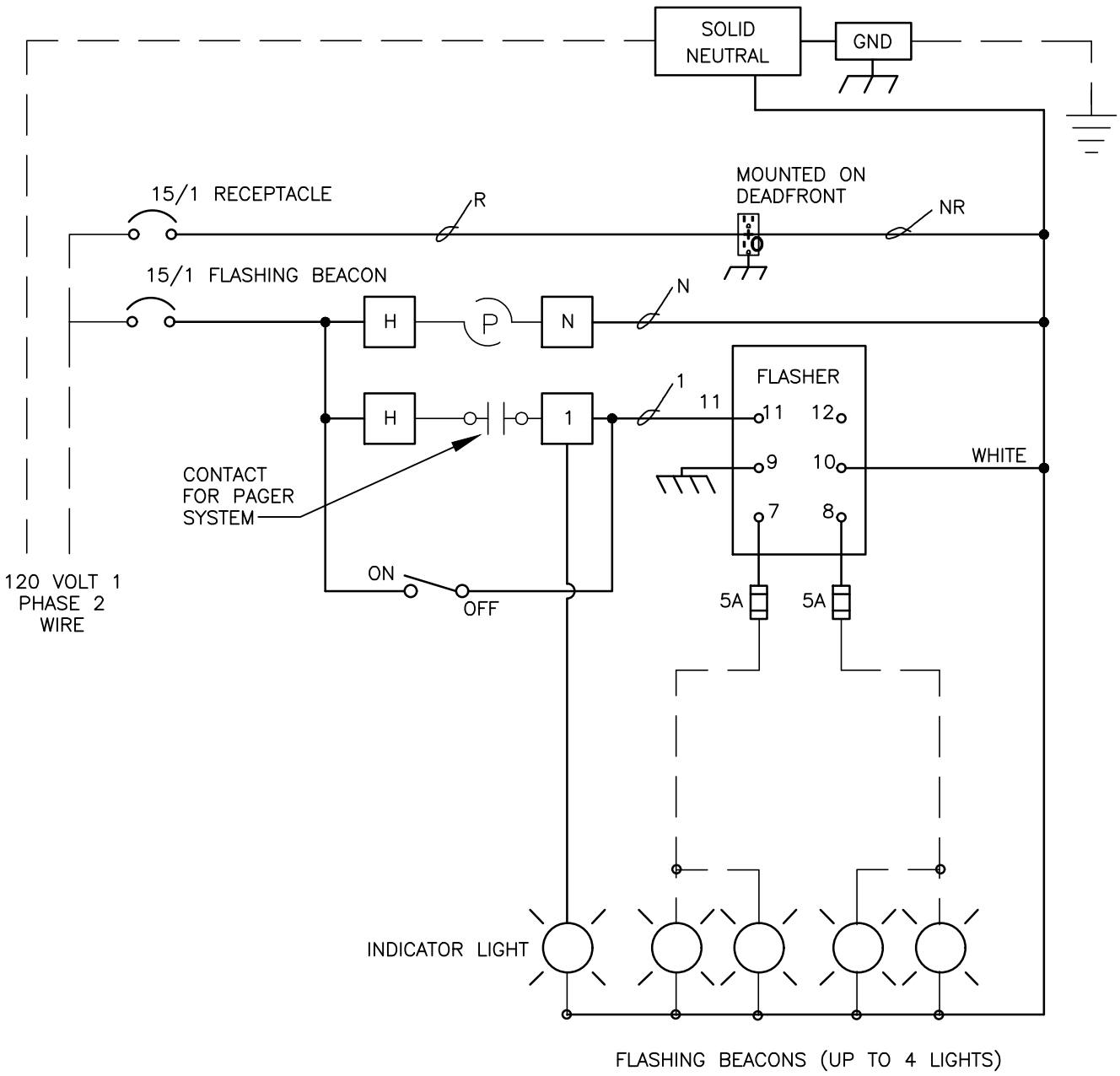

= TERMINAL BLOCK

= WIRE TAG

REV NO.	DATE	BY	APPR
1	2/21	OIS	CJC
2	9/21	RAW	CJC

PUBLIC WORKS – STREETS AND TRANSPORTATION

APPROVED BY: TRAFFIC ENGINEER MANAGER

APPROVED DATE: 9/1/2021

CITY OF Vancouver WASHINGTON

SCHOOL FLASHING STANDARD DETAILS WIRING DIAGRAM

STANDARD PLAN NUMBER

T24–01D

I:\CITYAPPS\AUTOCAD\STD_DETAILS\DRAWING_FILES\T24–01D

I:\CITYAPPS\AUTOCAD\STD_DETAILS\DRAWING_FILES\T24-01E

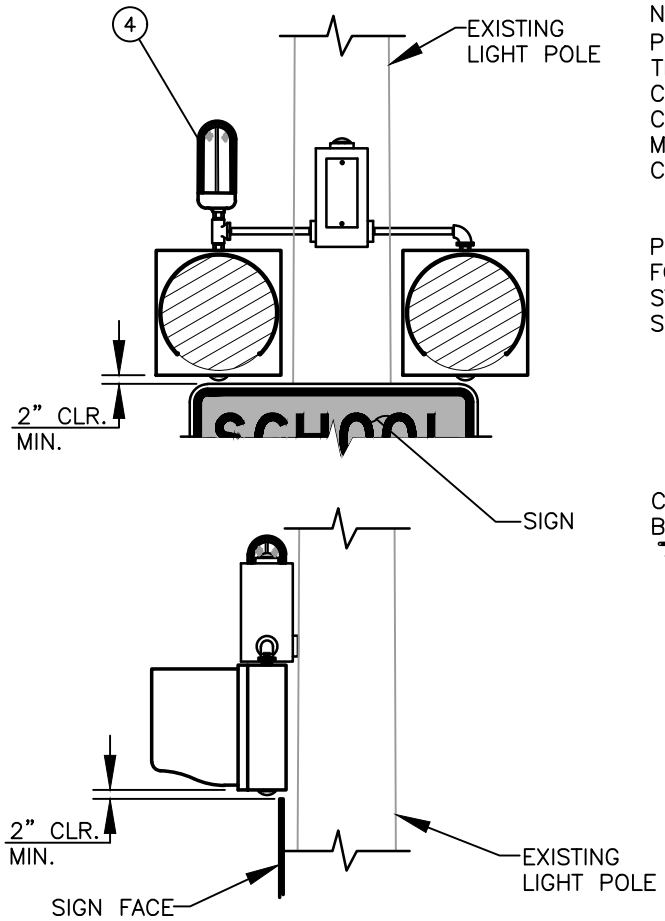

OPTIONAL INSTALLATION TO EXISTING LIGHT POLE

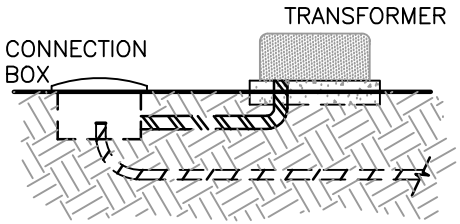

UNDERGROUND SERVICE

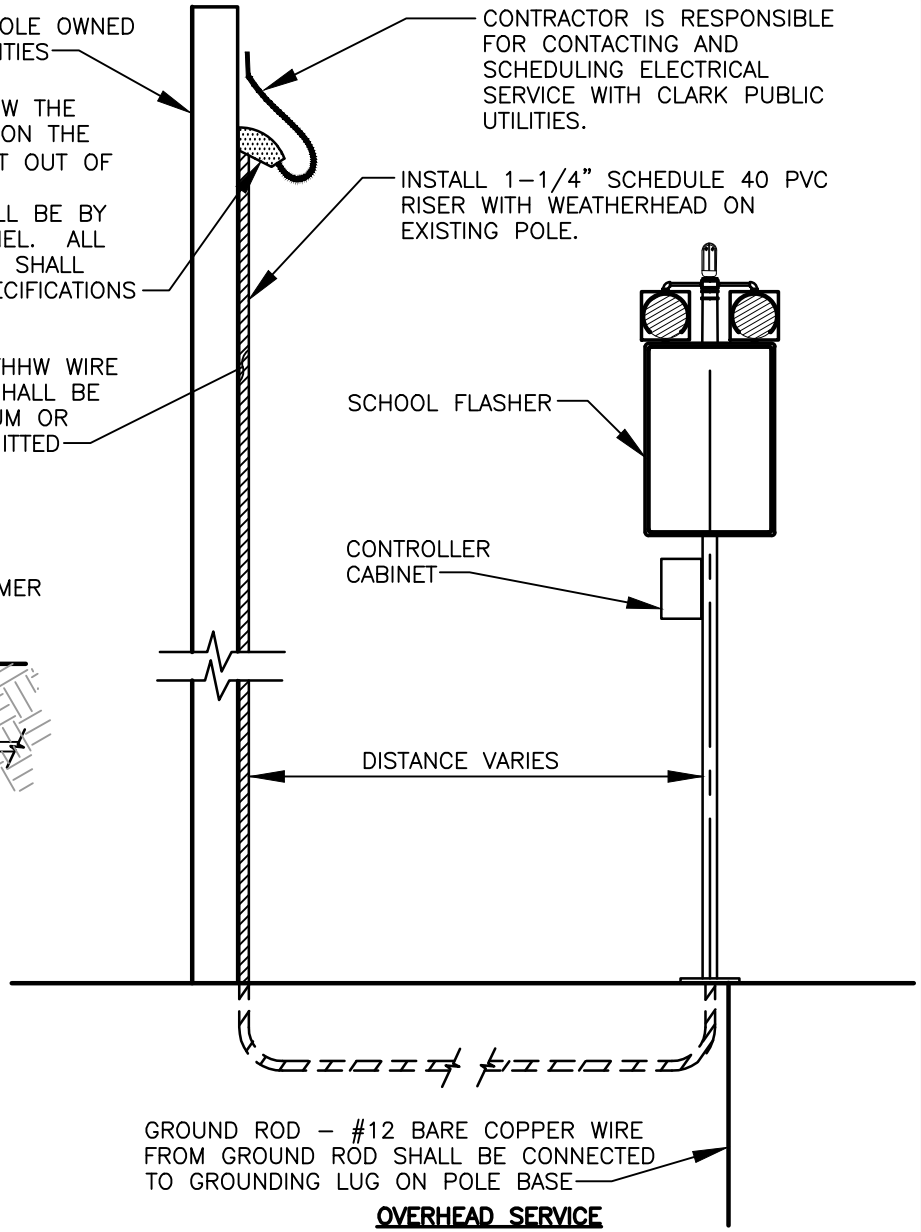

OVERHEAD SERVICE

REV NO.	DATE	BY	APPR
1	2/21	OIS	CJC
2	9/21	RAW	CJC

PUBLIC WORKS – STREETS AND TRANSPORTATION

APPROVED BY: TRAFFIC ENGINEER MANAGER

APPROVED DATE: 9/1/2021

CITY OF Vancouver WASHINGTON

SCHOOL FLASHER STANDARD DETAIL
OPTIONAL INSTALLATION ON EXISTING LIGHT POLE AND SERVICE CONNECTION

STANDARD PLAN NUMBER

T24-01E

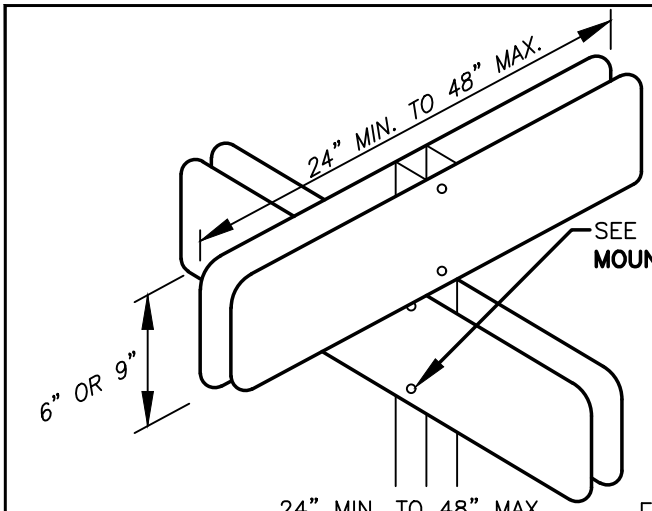

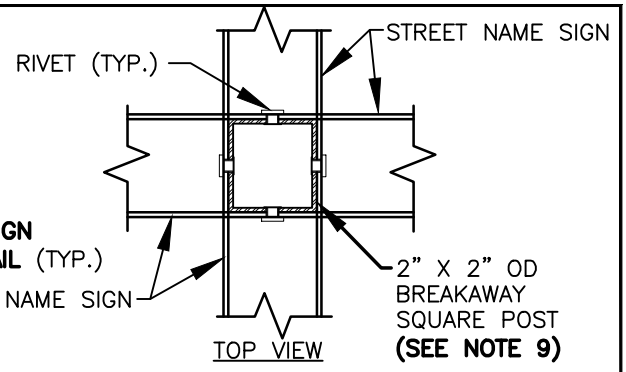

DOUBLE SIDED SIGN MOUNTING DETAIL

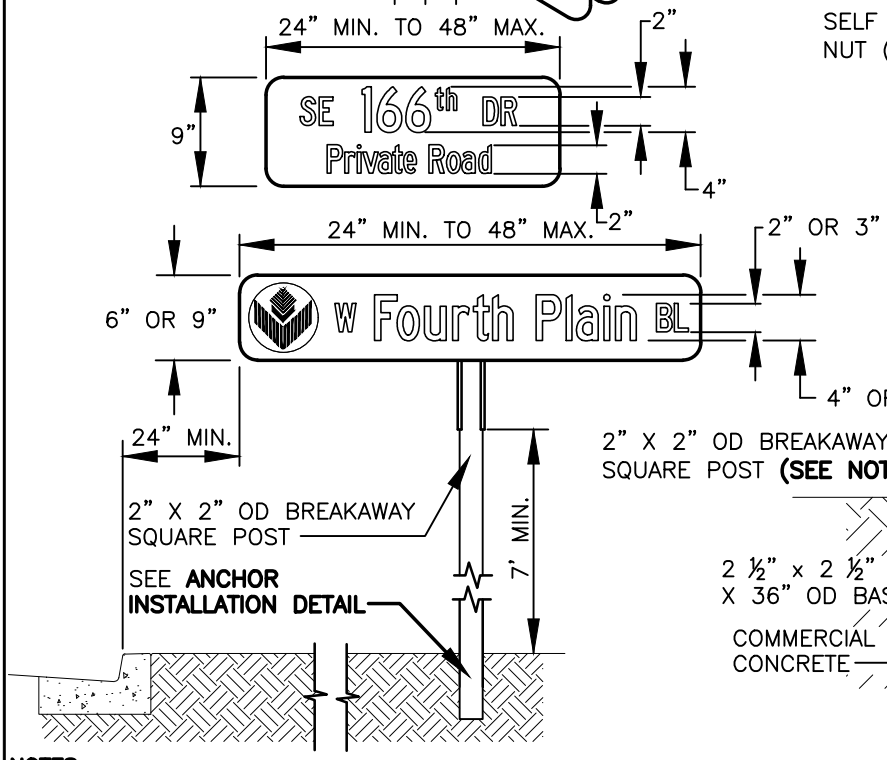

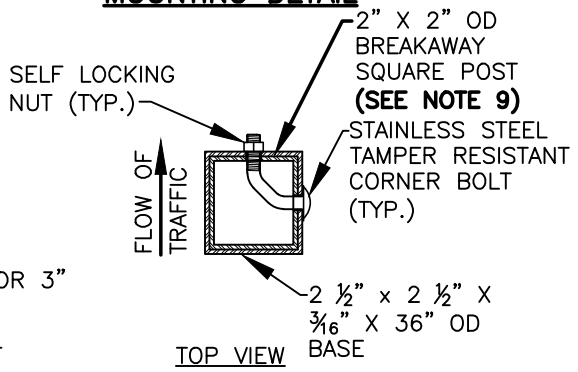

ANCHOR DETAIL

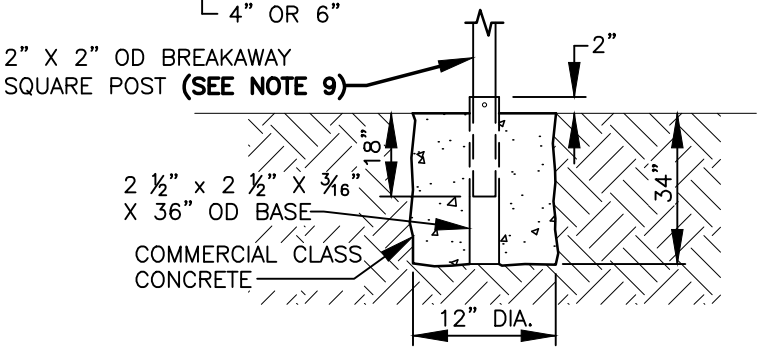

ANCHOR INSTALLATION DETAIL

NOTES:

1. SIGN TO BE 6" WITH 4" LETTERS ONLY WHEN BOTH STREETS ARE LOCAL AND HAVE A POSTED SPEED OF 25 MPH OR LESS.
2. SIGN TO BE 9" WITH 6" LETTERS WHEN STREETS HAVE A SPEED GREATER THAN 25 MPH AND ARE LOCAL OR ARTERIAL STREETS.
3. SIGN FACE SHALL BE FABRICATED FROM CUBED CORNERED LENS (VIP, TYPE A DIAMOND GRADE) REFLECTIVE MATERIAL. FACE LEGEND AND BORDER SHALL BE WHITE ON A GREEN BACKGROUND, EXCEPT IN THE DOWNTOWN AREA, WHICH SHALL HAVE A BROWN BACKGROUND.
4. LETTERING SHALL BE A COMBINATION OF UPPER AND LOWER CASE LETTERS PER FHWA STANDARDS. THE PREFIX SHALL BE ABBREVIATED UPPER CASE LETTERS. THE STREET NAME SHALL BE LOWER CASE LETTERS WITH THE FIRST LETTER UPPER CASE. THE SUFFIX SHALL BE ABBREVIATED UPPER CASE.
5. ALL SIGN MATERIALS AND ATTACHMENT HARDWARE SHALL CONFORM TO MUTCD AND WSDOT STANDARD SPECIFICATIONS.
6. WHEN SIGN REQUIRES TWO MESSAGE LINES, USE 2 SIGN BOARDS WITH AN ARROW ADDED TO THE BOARD (LEFT ARROW LEFT OF THE DIRECTION AND RIGHT ARROW ON THE RIGHT).
7. ENGINEER SHALL APPROVE FACE COPY PRIOR TO FABRICATION.
8. FOR SIGN MANUFACTURING DETAILS SEE CITY OF VANCOUVER AMENDMENTS TO THE STANDARDS AND SPECIFICATIONS FOR TRAFFIC CONTROL DEVICES AND LIGHTING.
9. BREAKAWAY SIGN POSTS ARE TO BE "PRE-PUNCHED" CITY APPROVED POSTS.

REV NO.	DATE	BY	APPR
1	1/05	RAW	AGE
2	3/06	RAW	AGE
3	2/07	RAW	AGE
4	8/08	RAW	AGE
5	1/15	RAW	CJC
6	9/21	RAW	CJC

PUBLIC WORKS – STREETS AND TRANSPORTATION

APPROVED BY: TRAFFIC ENGINEER MANAGER

APPROVED DATE: 9/1/2021

CITY OF Vancouver WASHINGTON

GROUND MOUNTED STREET NAME SIGN

STANDARD PLAN NUMBER T29-01

I:\CITYAPPS\AUTOCAD\STD_DETAILS\DRAWING_FILES\T29-01

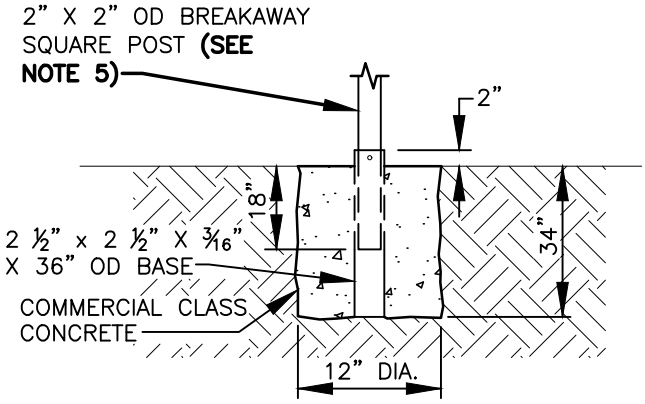

ANCHOR INSTALLATION DETAIL

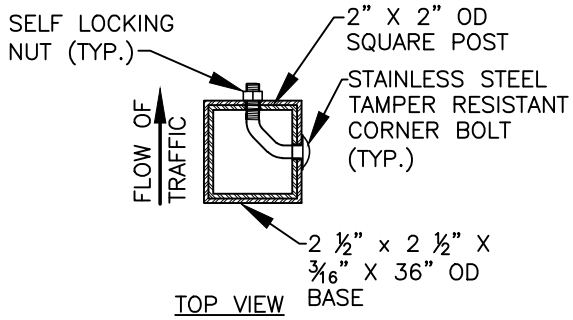

ANCHOR DETAIL

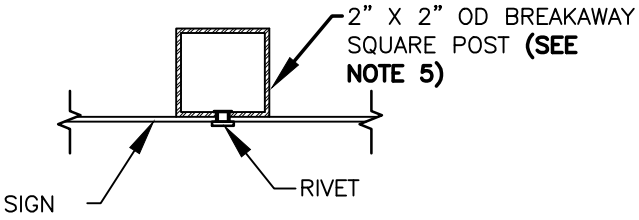

TOP VIEW

SIGN MOUNTING DETAIL

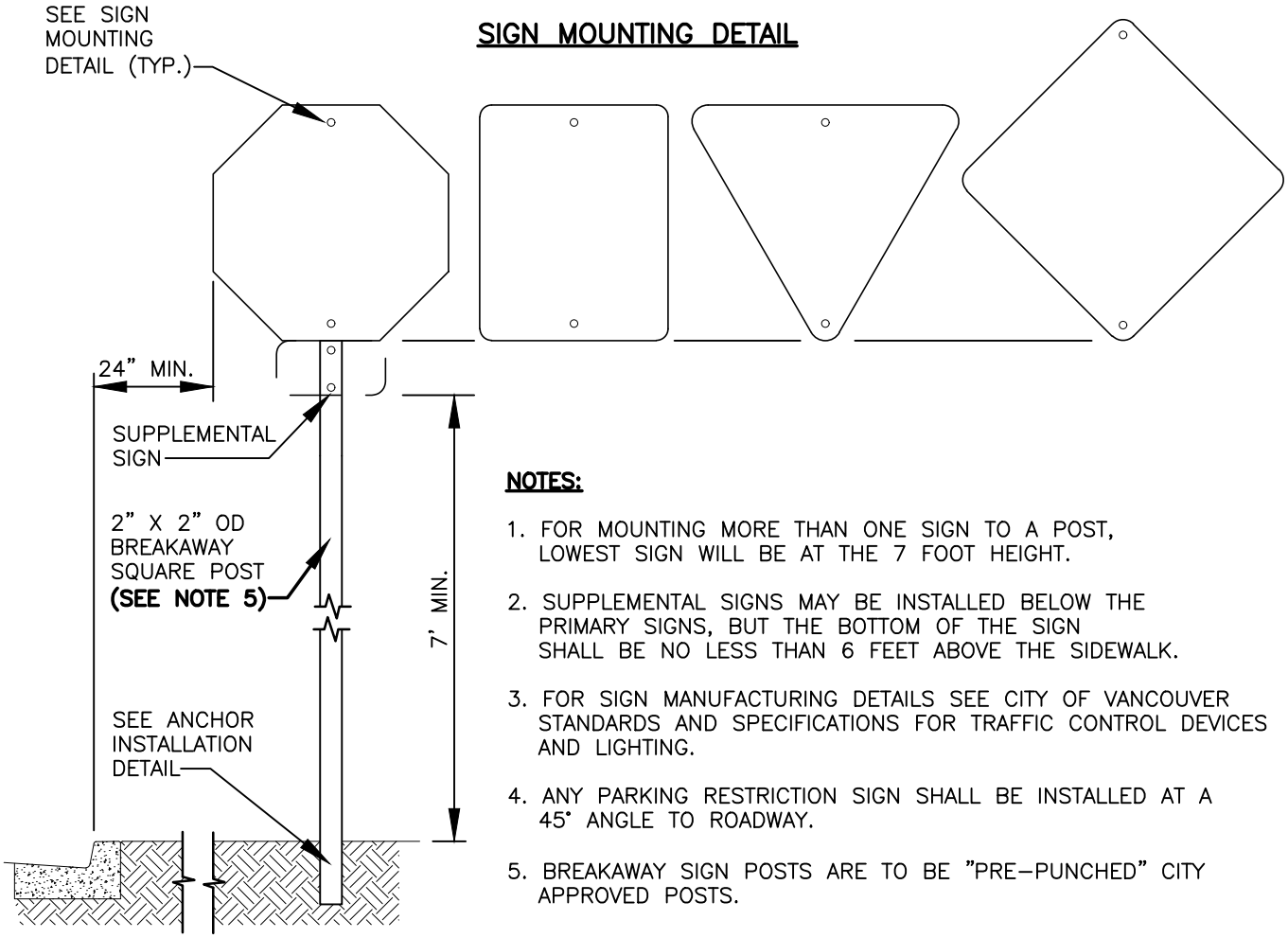

NOTES:

1. FOR MOUNTING MORE THAN ONE SIGN TO A POST, LOWEST SIGN WILL BE AT THE 7 FOOT HEIGHT.
2. SUPPLEMENTAL SIGNS MAY BE INSTALLED BELOW THE PRIMARY SIGNS, BUT THE BOTTOM OF THE SIGN SHALL BE NO LESS THAN 6 FEET ABOVE THE SIDEWALK.
3. FOR SIGN MANUFACTURING DETAILS SEE CITY OF VANCOUVER STANDARDS AND SPECIFICATIONS FOR TRAFFIC CONTROL DEVICES AND LIGHTING.
4. ANY PARKING RESTRICTION SIGN SHALL BE INSTALLED AT A 45° ANGLE TO ROADWAY.
5. BREAKAWAY SIGN POSTS ARE TO BE "PRE-PUNCHED" CITY APPROVED POSTS.

REV NO.	DATE	BY	APPR
1	1/05	RAW	AGE
2	3/06	RAW	AGE
3	2/07	RAW	AGE
4	8/08	RAW	AGE
5	1/15	RAW	CJC
6	9/21	RAW	CJC

PUBLIC WORKS – STREETS AND TRANSPORTATION

APPROVED BY: TRAFFIC ENGINEER MANAGER

APPROVED DATE: 9/1/2021

CITY OF Vancouver WASHINGTON

GROUND MOUNTED SIGN DETAILS

STANDARD PLAN NUMBER

T29–02

I:\CITYAPPS\AUTOCAD\STD_DETAILS\DRAWING_FILES\T29-02

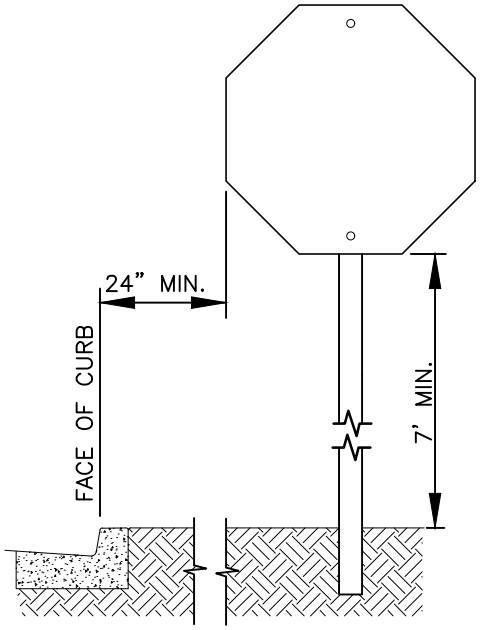

SIGN LOCATION BY CURB

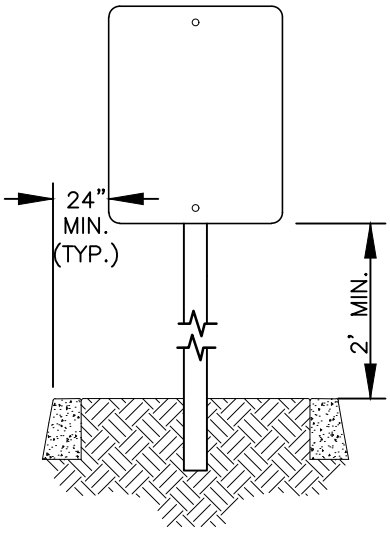

SIGN LOCATION IN MEDIAN
(SEE DETAIL T02-17 FOR PLACEMENT)

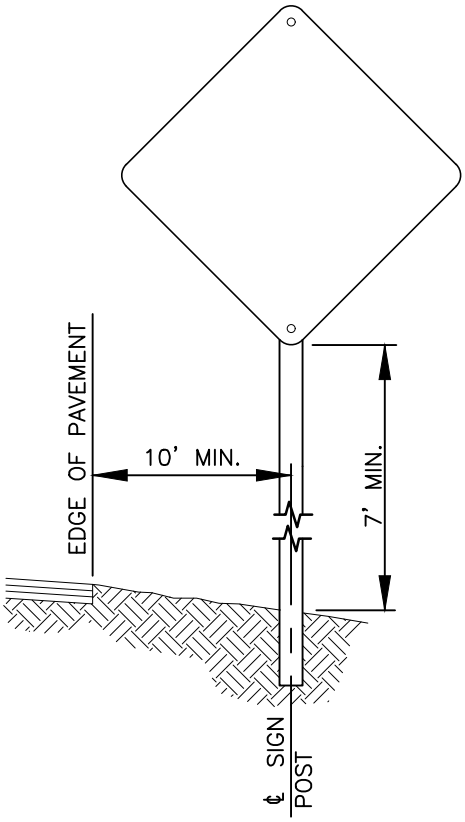

SIGN LOCATION EDGE OF PAVEMENT

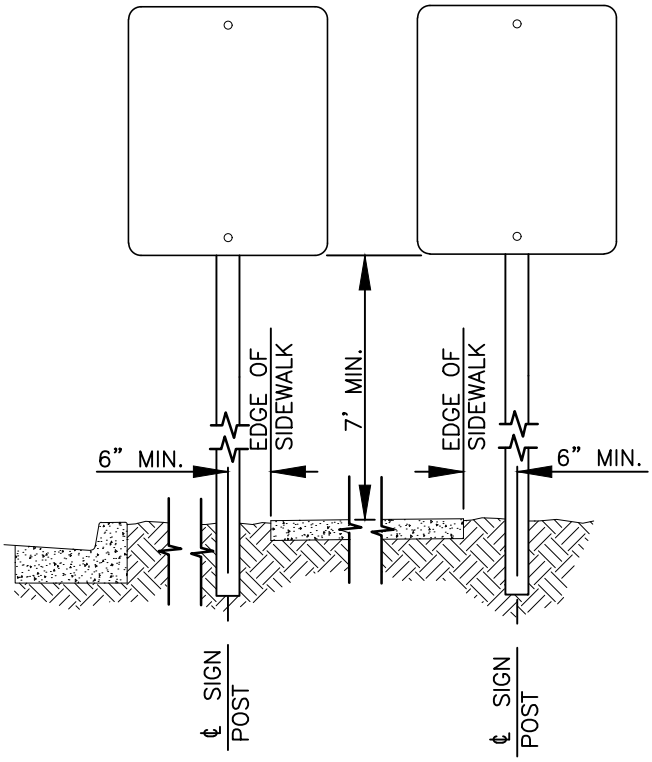

SIGN LOCATION OUTSIDE OF SIDEWALK

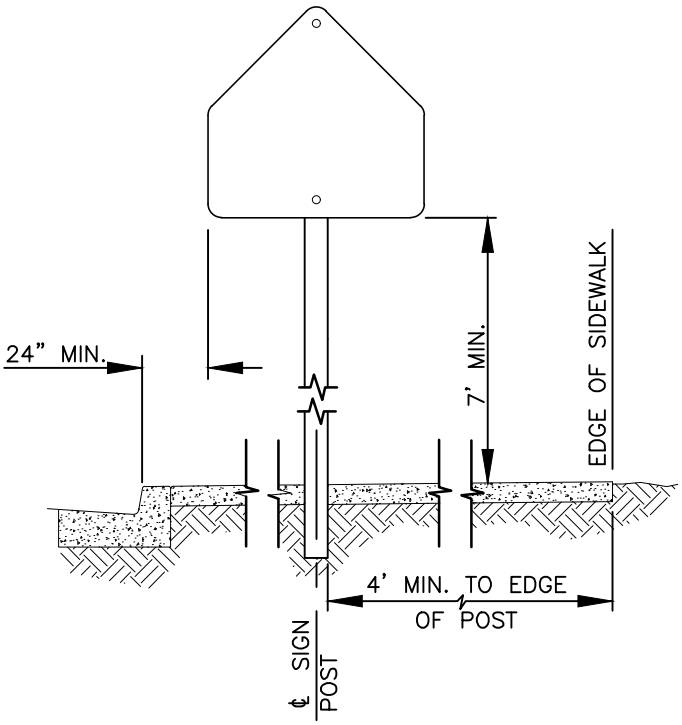

SIGN LOCATION IN SIDEWALK

REV NO.	DATE	BY	APPR
1	8/04	RAW	AGE
2	3/06	RAW	AGE
3	2/07	RAW	AGE
4	8/08	RAW	AGE
5	1/15	RAW	CJC
6	9/21	RAW	CJC

PUBLIC WORKS – STREETS AND TRANSPORTATION

APPROVED BY: TRAFFIC ENGINEER MANAGER

APPROVED DATE: 9/1/2021

CITY OF Vancouver WASHINGTON

SIGN LOCATION DETAILS

STANDARD PLAN NUMBER

T29-03

I:\CITYAPPS\AUTOCAD\STD_DETAILS\DRAWING_FILES\T29-03

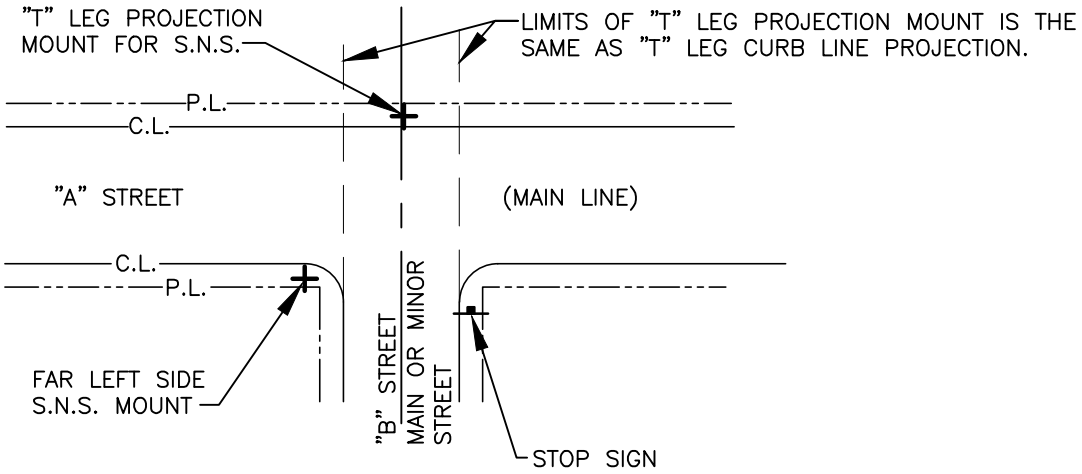

WHEN A "MAIN LINE" STREET AND A MINOR "T" LEG STREET OR TWO "MAIN LINE" STREETS INTERSECT AT A "T" INTERSECTION, SIGNS SHALL BE MOUNTED INSIDE THE CURB LINE ON BOTH SIDES OF THE THROUGH STREET. ONE SET OF SIGNS SHALL BE ERECTED "FAR LEFT SIDE" AT THE "T" LEG. THE OTHER SET OF SIGNS SHALL BE MOUNTED AS CLOSE AS POSSIBLE TO THE "T" LEG CENTER LINE PROJECTION. FOR ADDITIONAL SIGN INFORMATION, SEE **GROUND MOUNTED STREET NAME SIGN DETAIL, T29–01**.

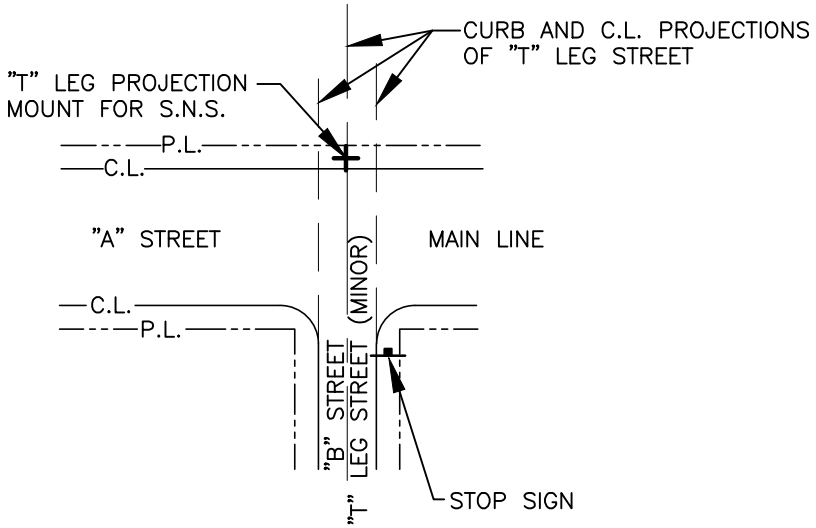

WHEN TWO MINOR STREETS INTERSECT AT A "T" INTERSECTION, SIGNS WILL BE MOUNTED INSIDE THE CURB LINE OF THE THROUGH STREET ON THE SIDE OPPOSITE THE "T" LEG AND WITHIN THE CURB LINE PROJECTIONS OF THE "T" LEG STREET. SIGNS WILL BE MOUNTED AS CLOSE AS POSSIBLE TO THE "T" LEG CENTER LINE PROJECTION. FOR ADDITIONAL SIGN INFORMATION SEE **GROUND MOUNTED STREET NAME SIGN DETAIL, T29–01**.

"T" INTERSECTIONS

REV NO.	DATE	BY	APPR
1	1/05	RAW	AGE
2	3/06	RAW	AGE
3	2/07	RAW	AGE
4	8/08	RAW	AGE
5	1/15	RAW	CJC
6	9/21	RAW	CJC

PUBLIC WORKS – STREETS AND TRANSPORTATION

APPROVED BY: TRAFFIC ENGINEER MANAGER

APPROVED DATE: 9/1/2021

CITY OF Vancouver WASHINGTON

STREET NAME SIGN PLACEMENT "T" INTERSECTIONS

STANDARD PLAN NUMBER

T29–04

I:\CITYAPPS\AUTOCAD\STD_DETAILS\DRAWING_FILES\T29–04

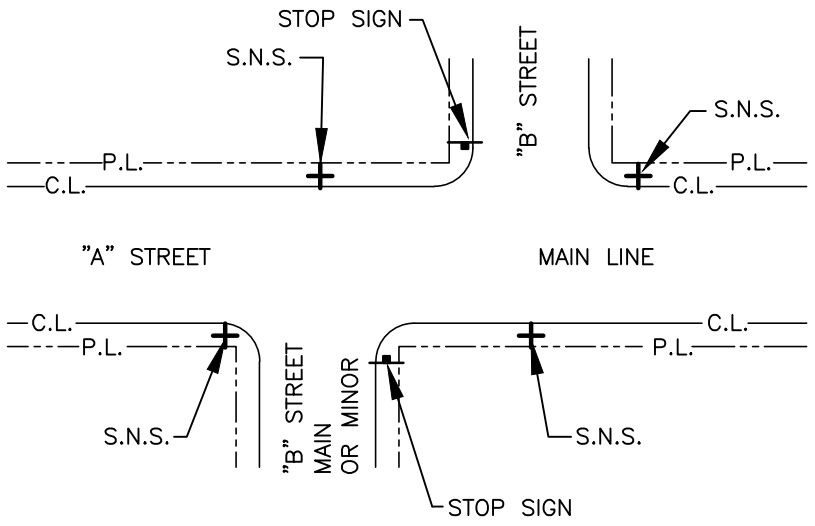

"JOGGING" INTERSECTIONS

FOR SIGNING PURPOSES, "JOGGING" INTERSECTIONS WILL BE CONSIDERED AS TWO "T" INTERSECTIONS PLACED SIDE BY SIDE WITH THE "THROUGH" STREETS CONNECTED AND THE "T" LEGS POINTED IN OPPOSITE DIRECTIONS. SIGNING RULES FOR "JOGGING" INTERSECTIONS ARE THE SAME AS THOSE FOR TWO "T" INTERSECTIONS. FOR ADDITIONAL SIGN INFORMATION, SEE **GROUND MOUNTED STREET NAME SIGN DETAIL, T29–01**.

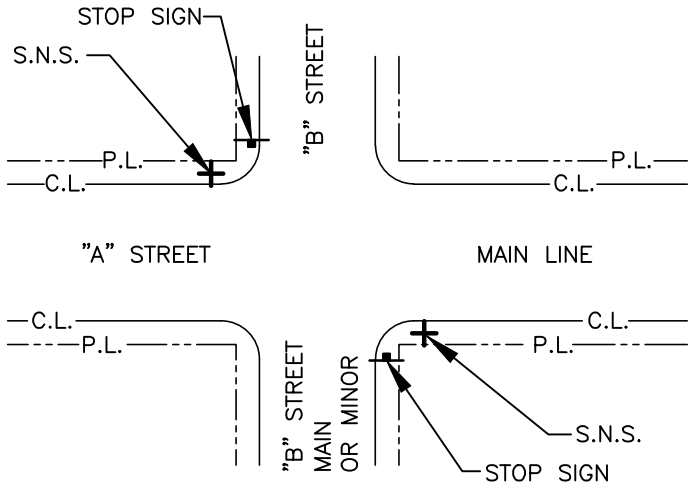

"4–WAY" INTERSECTIONS

IN BUSINESS DISTRICTS AND ON PRINCIPAL ARTERIALS, STREET NAME SIGNS SHOULD BE PLACED AT LEAST ON DIAGONALLY OPPOSITE CORNERS SO THAT THEY WILL BE ON THE FAR RIGHT–HAND SIDE OF THE INTERSECTION FOR TRAFFIC ON THE MAJOR STREET. SIGNS NAMING BOTH STREETS SHOULD BE ERECTED AT EACH LOCATION. THEY SHOULD BE MOUNTED WITH THEIR FACES PARALLEL TO THE STREETS THEY NAME. IN RESIDENTIAL DISTRICTS AT LEAST ONE STREET NAME SIGN SHOULD BE MOUNTED AT EACH INTERSECTION. FOR ADDITIONAL SIGN INFORMATION, SEE **GROUND MOUNTED STREET NAME SIGN DETAIL, T29–01**.

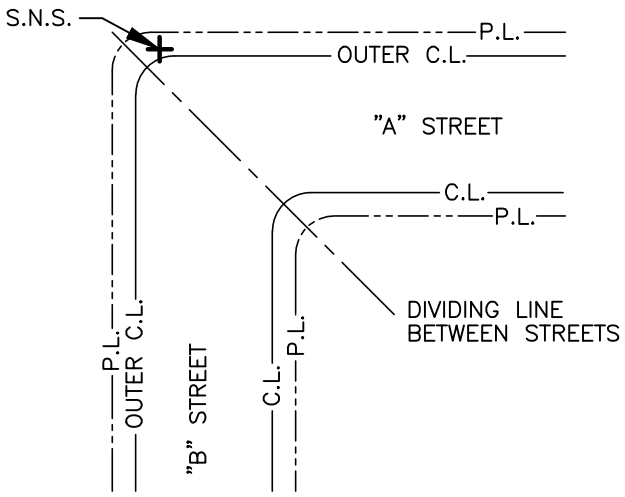

"ANGLED" INTERSECTIONS

STREET NAME SIGNS SHALL BE ERECTED AT "ANGLED" INTERSECTIONS INSIDE THE OUTER CURB LINES OF THE TWO INTERSECTING STREETS. THEY SHALL BE MOUNTED 10 FEET OR LESS FROM THE DIVIDING LINE BETWEEN STREETS, OTHERWISE SIGNS WILL BE MOUNTED AS CLOSE AS POSSIBLE TO THE "T" LEG CENTER LINE PROJECTION. FOR ADDITIONAL SIGN INFORMATION, SEE **GROUND MOUNTED STREET NAME SIGN DETAIL, T29–01**.

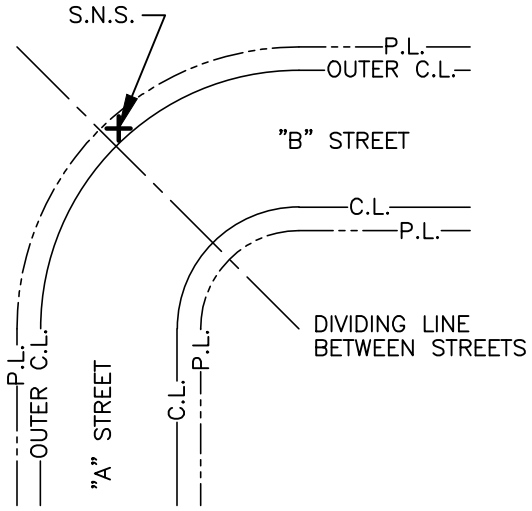

"CURVED" INTERSECTIONS

STREET NAME SIGNS SHALL BE ERECTED AT "CURVED" INTERSECTIONS INSIDE THE OUTER CURB LINES OF THE TWO INTERSECTING STREETS. THEY SHALL BE MOUNTED BETWEEN THE TWO HOUSES ALONG THE OUTER PROPERTY LINE BETWEEN WHICH N–S HOUSE NUMBERS CHANGE TO E–W HOUSE NUMBERS, OR BETWEEN OUTER PROPERTY LINE HOUSES BETWEEN WHICH HOUSE NUMBERS CHANGE FROM ODD TO EVEN NUMBERS. IF HOUSES ARE NOT BUILT ALONG THE OUTER PROPERTY LINE, SIGNS SHALL BE MOUNTED IN THE MIDDLE OF THE CURB INSIDE THE OUTER CURB LINE. FOR ADDITIONAL SIGN INFORMATION, SEE **GROUND MOUNTED STREET NAME SIGN DETAIL, T29–01**.

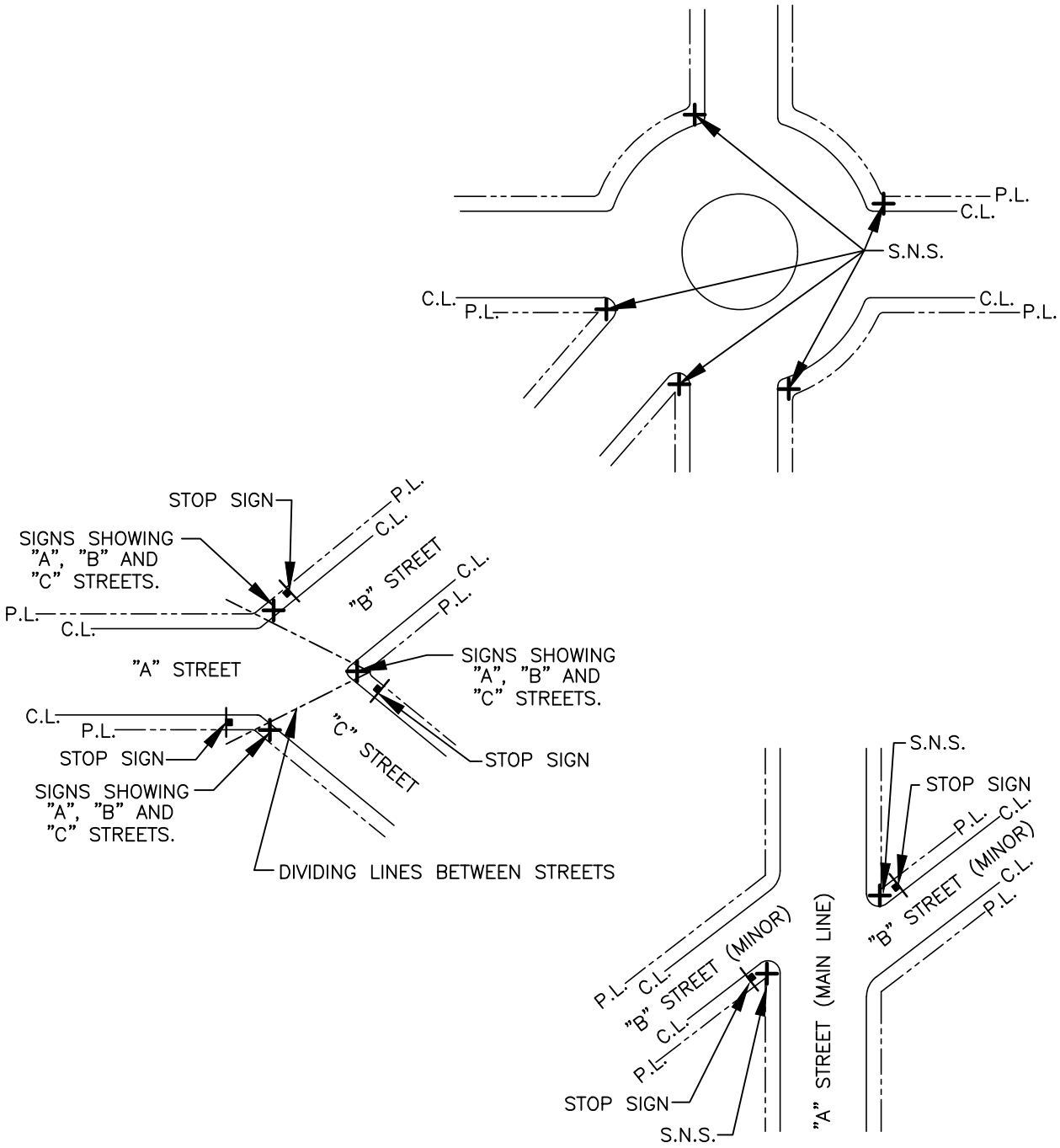

"SPECIAL CONDITION" INTERSECTIONS

MOST OF THE INTERSECTIONS IN THE CITY FALL INTO THESE CATEGORIES OUTLINED IN SECTIONS A THROUGH E. THERE ARE MANY INTERSECTIONS, HOWEVER, THAT FALL INTO NO PATTERN AND ARE DIFFICULT TO CLASSIFY. THESE ARE KNOWN AS "SPECIAL CONDITION" INTERSECTIONS. THIS SECTION CONTAINS EXAMPLES OF THESE INTERSECTIONS WITH SUGGESTED SIGN LOCATIONS. IT IS REALIZED THAT THE EXAMPLES ARE NOT ALL–INCLUSIVE, BUT SHOULD ACT AS GUIDES FOR SIGN MOUNTING AT RELATED INTERSECTIONS. AT INTERSECTIONS OF ODD CONFIGURATION THAT CANNOT BE CLASSIFIED, SIGNS SHALL BE PLACED SUCH THAT THEY ARE VISIBLE FROM ALL APPROACHES. FOR ADDITIONAL SIGN INFORMATION, SEE **GROUND MOUNTED STREET NAME SIGN DETAIL, T29–01**.

REV NO.	DATE	BY	APPR
1	1/05	RAW	AGE
2	3/06	RAW	AGE
3	2/07	RAW	AGE
4	8/08	RAW	AGE
5	1/15	RAW	CJC
6	9/21	RAW	CJC

PUBLIC WORKS – STREETS AND TRANSPORTATION

APPROVED BY: TRAFFIC ENGINEER MANAGER

APPROVED DATE: 9/1/2021

CITY OF Vancouver WASHINGTON

STREET NAME SIGN PLACEMENT AT "SPECIAL CONDITIONS" INTERSECTIONS

STANDARD PLAN NUMBER

T29–07A

I:\CITYAPPS\AUTOCAD\STD_DETAILS\DRAWING_FILES\T29–07A

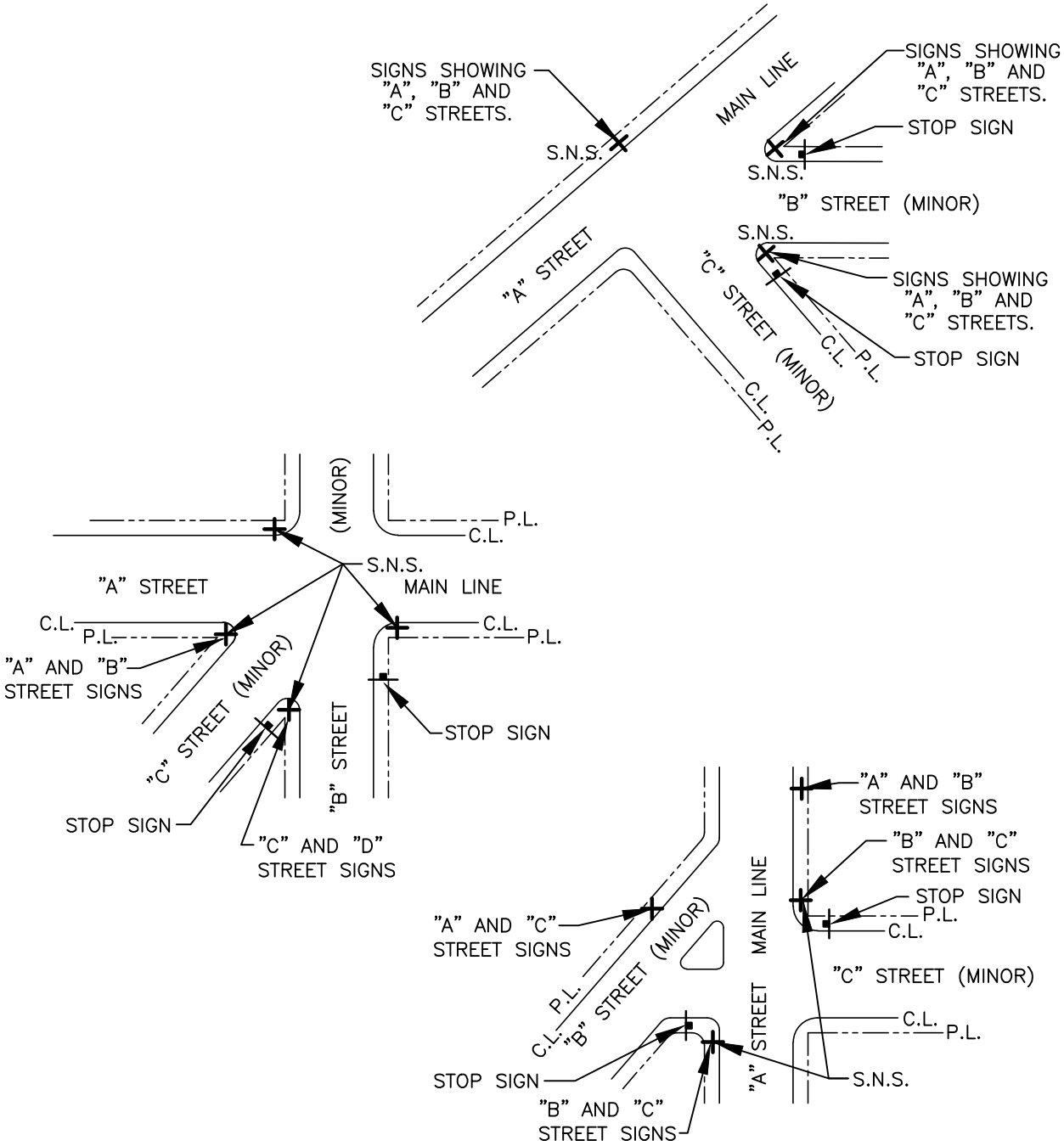

"SPECIAL CONDITION" INTERSECTIONS

MOST OF THE INTERSECTIONS IN THE CITY FALL INTO THESE CATEGORIES OUTLINED IN SECTIONS A THROUGH E. THERE ARE MANY INTERSECTIONS, HOWEVER, THAT FALL INTO NO PATTERN AND ARE DIFFICULT TO CLASSIFY. THESE ARE KNOWN AS "SPECIAL CONDITION" INTERSECTIONS. THIS SECTION CONTAINS EXAMPLES OF THESE INTERSECTIONS WITH SUGGESTED SIGN LOCATIONS. IT IS REALIZED THAT THE EXAMPLES ARE NOT ALL–INCLUSIVE, BUT SHOULD ACT AS GUIDES FOR SIGN MOUNTING AT RELATED INTERSECTIONS. AT INTERSECTIONS OF ODD CONFIGURATION THAT CANNOT BE CLASSIFIED, SIGNS SHALL BE PLACED SUCH THAT THEY ARE VISIBLE FROM ALL APPROACHES. FOR ADDITIONAL SIGN INFORMATION, SEE **GROUND MOUNTED STREET NAME SIGN DETAIL, T29–01**.

REV NO.	DATE	BY	APPR
1	1/05	RAW	AGE
2	3/06	RAW	AGE
3	2/07	RAW	AGE
4	8/08	RAW	AGE
5	1/15	RAW	CJC
6	9/21	RAW	CJC

PUBLIC WORKS – STREETS AND TRANSPORTATION

APPROVED BY: TRAFFIC ENGINEER MANAGER

APPROVED DATE: 9/1/2021

CITY OF Vancouver WASHINGTON

STREET NAME SIGN PLACEMENT AT "SPECIAL CONDITIONS" INTERSECTIONS

STANDARD PLAN NUMBER

T29–07B

I:\CITYAPPS\AUTOCAD\STD_DETAILS\DRAWING_FILES\T29–07B

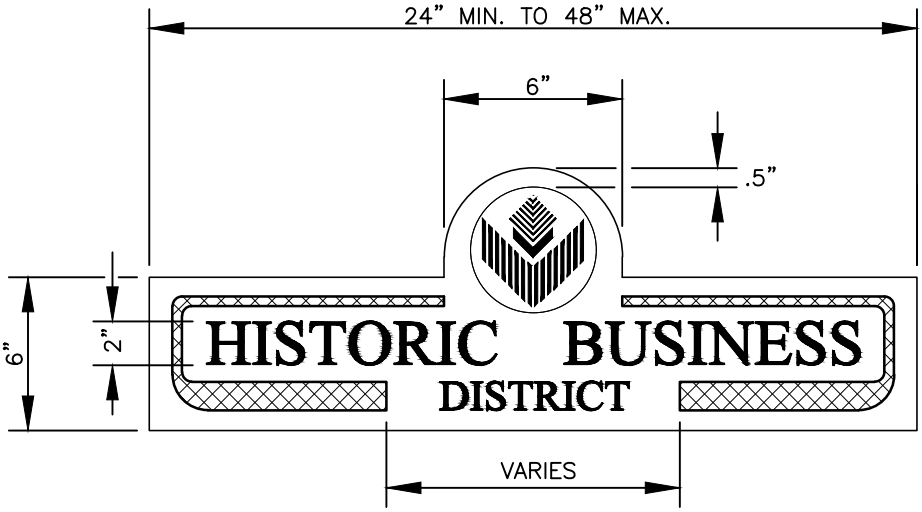

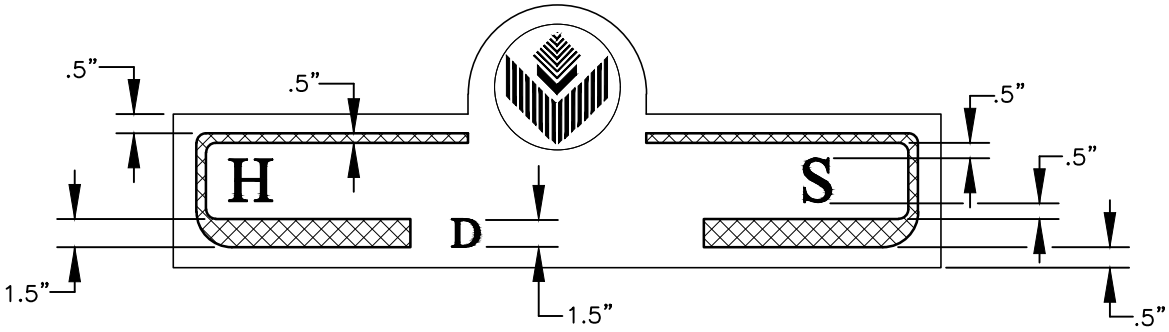

NOTES:

1. FACE LEGEND AND BORDER SHALL BE WHITE, EACH DISTRICT SHALL CHOOSE COLOR OF BACKGROUND.
2. LETTERING SHALL BE TIMES NEW ROMAN.
3. ENGINEER SHALL APPROVE SIGN PRIOR TO FABRICATION.
4. ALL SIGN MATERIALS AND ATTACHMENT HARDWARE SHALL CONFORM TO MUTCD AND WSDOT STANDARD SPECIFICATIONS.
5. FOR SIGN MANUFACTURING DETAILS SEE CHAPTER 3, SECTION 3–09 PERMANENT SIGNING OF THE CITY OF VANCOUVER AMENDMENTS TO THE STANDARDS AND SPECIFICATIONS FOR TRAFFIC CONTROL DEVICES AND LIGHTING.

REV NO.	DATE	BY	APPR
1	1/05	RAW	AGE
2	3/06	RAW	AGE
3	2/07	RAW	AGE
4	8/08	RAW	AGE
5	1/15	RAW	CJC
6	9/21	RAW	CJC

PUBLIC WORKS – STREETS AND TRANSPORTATION

APPROVED BY: TRAFFIC ENGINEER MANAGER

APPROVED DATE: 9/1/2021

CITY OF Vancouver WASHINGTON

SIGN TOPPER DETAIL

STANDARD PLAN NUMBER

T29–08

I:\CITYAPPS\AUTOCAD\STD_DETAILS\DRAWING_FILES\T29–08

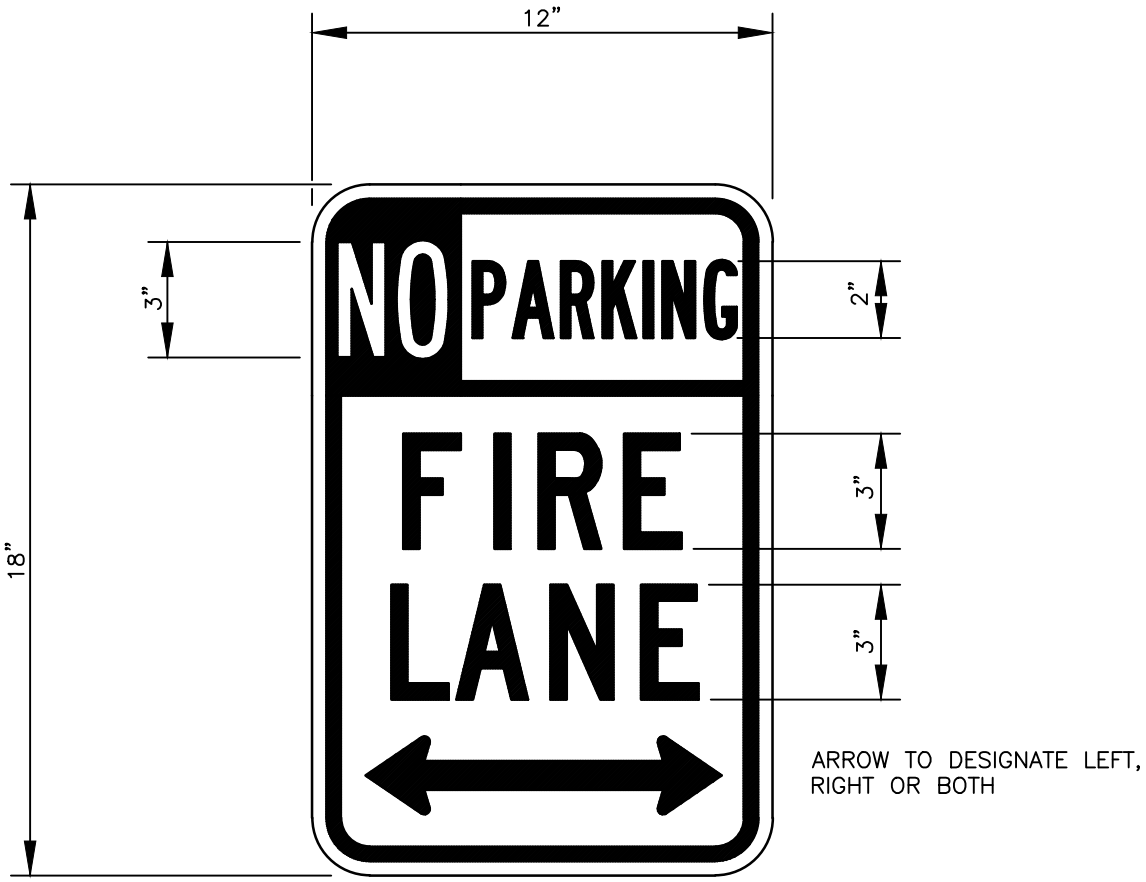

(MODIFIED R7–107)

NOTES:

1. **"NO PARKING FIRE LANE"** SHALL BE POSTED WHEREVER PARKING COULD OBSTRUCT THE REQUIRED 20' FIRE APPARATUS ACCESS LANE. "NO PARKING FIRE LANE" SHALL BE POSTED TO THE FOLLOWING STANDARDS:
   - ACCESS ROADS LESS THAN 28' NO PARKING ALLOWED ON STREET;
   - ACCESS ROADS 28' TO 36' PARKING ONLY ON ONE (1) SIDE;
   - ACCESS ROADS 36' AND GREATER PARKING ON BOTH SIDES.
   - CUL–DE–SACS THAT ARE SPECIFICALLY REQUIRED BY THE FIRE DEPARTMENT FOR TURN–AROUND WITH A RADIUS OF LESS THAN 43' NO PARKING IN RADIUS OF CUL–DE–SAC.
2. PARKING RESTRICTION SIGNS SHALL BE INSTALLED AT 45° TO ROADWAY.
3. FOR ADDITIONAL INFORMATION, SEE COV VANCOUVER FIRE MARSHAL'S OFFICE STD. PLAN F–503.3.

REV NO.	DATE	BY	APPR
1	1/05	RAW	AGE
2	3/06	RAW	AGE
3	2/07	RAW	AGE
4	8/08	RAW	AGE
5	1/15	RAW	CJC
6	9/21	RAW	CJC

PUBLIC WORKS – STREETS AND TRANSPORTATION

APPROVED BY: TRAFFIC ENGINEER MANAGER

APPROVED DATE: 9/1/2021

CITY OF Vancouver WASHINGTON

NO PARKING FIRE LANE SIGN DETAIL

STANDARD PLAN NUMBER T29–09

I:\CITYAPPS\AUTOCAD\STD_DETAILS\DRAWING_FILES\T29–09

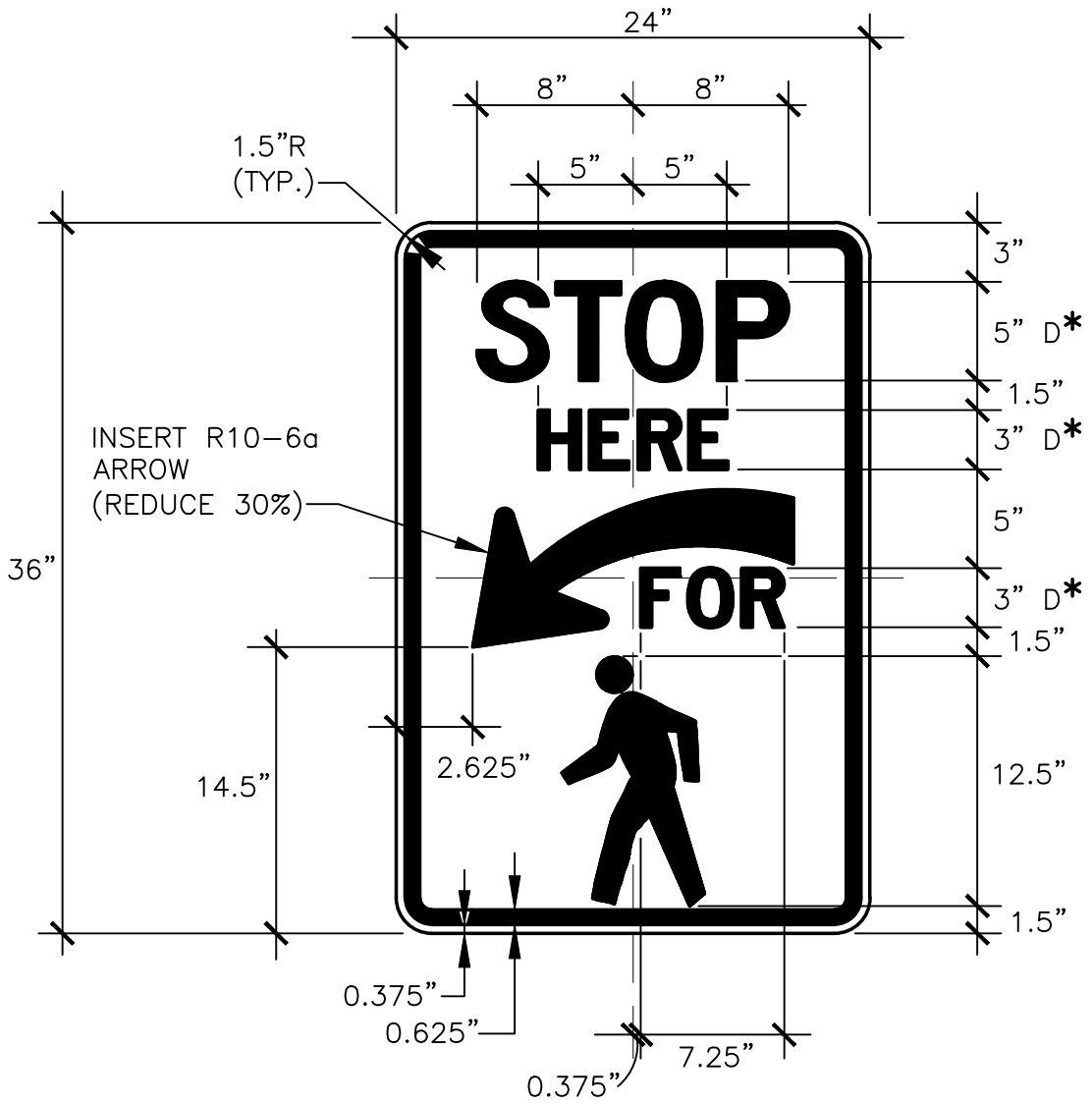

*SERIES 2000 STANDARD ALPHABETS.

NOTES:

1. THE "STOP HERE FOR PEDESTRIANS" SIGN (MODIFIED R1-5aL) SHOULD BE USED WHEN ADVANCE STOP BARS ARE USED FOR CROSSWALKS. IF USED, THE SIGN SHALL BE PLACED SO THE DOWN POINTING ARROW IS AT THE SAME LOCATION AS THE STOP BAR.

2. SIGN BACKGROUND: WHITE, RETRO-REFLECTIVE SHEETING
   SIGN LEGEND: BLACK, NON-REFLECTIVE.

REV NO.	DATE	BY	APPR
1	3/06	RAW	AGE
2	2/07	RAW	AGE
3	8/08	RAW	AGE
4	1/15	RAW	CJC
5	9/21	RAW	CJC

PUBLIC WORKS - STREETS AND TRANSPORTATION

APPROVED BY: TRAFFIC ENGINEER MANAGER

APPROVED DATE: 9/1/2021

CITY OF Vancouver WASHINGTON

STOP HERE FOR PEDESTRIANS SIGN DETAIL

STANDARD PLAN NUMBER

T29-10

I:\CITYAPPS\AUTOCAD\STD_DETAILS\DRAWING_FILES\T29-10

SIGNING GENERAL NOTES:

1. STREET NAME SIGN SHALL BE ALUMINUM SHEETING, FLAT STOCK, IN LENGTHS OF 6" INCREMENTS.
2. SIGN FACE SHALL BE FABRICATED FROM CUBED CORNERED LENS (VIP, TYPE A) REFLECTIVE MATERIAL. FACE LEGEND AND BORDER SHALL BE WHITE ON A GREEN BACKGROUND.
3. LETTERING SHALL BE A COMBINATION OF UPPER AND LOWER CASE LETTERS PER FHWA STANDARDS. THE PREFIX/SUFFIX WILL BE INITIAL UPPER CASE LETTERS AT HALF HEIGHT AND CENTERED ON THE PRIMARY COPY. STREET NAMES WILL BE LOWER CASE LETTER WITH THE FIRST LETTER UPPER CASE. IF STREET NAME IS A NUMBERED STREET THEN THE SUFFIX OF THE PRIMARY COPY SHALL BE LOWER CASE SUPERSCRIPT AND SHALL BE HALF THE HEIGHT OF THE PRIMARY COPY'S CAPITAL LETTERS.
4. ALL SIGN MATERIALS AND ATTACHMENT HARDWARE SHALL CONFORM TO MUTCD AND WSDOT STANDARD SPECIFICATIONS.
5. WHEN SIGN REQUIRES TWO MESSAGE LINES, WIDTH SHALL BE INCREASED AND AN ARROW SHALL BE ADDED TO BOTH MESSAGE LINES (LEFT ARROW LEFT OF THE DIRECTION AND RIGHT ARROW ON THE RIGHT).
6. ENGINEER SHALL APPROVE FACE COPY PRIOR TO FABRICATION.

STRIPING GENERAL NOTES:

1. ALL MARKINGS WILL BE THERMOPLASTIC UNLESS OTHERWISE NOTED ON PLANS.
2. REMOVAL OF EXISTING STRIPING IS TO BE DETERMINED IN THE FIELD AND IS CONSIDERED INCIDENTAL WORK, STRIPING SHALL BE GROUND OFF AS DIRECTED BY THE ENGINEER.
3. STRIPING REMOVAL SHALL BE PER HYDROJET OR AS DIRECTED BY THE ENGINEER.
4. AREAS OF STRIPING NOT RESURFACED SHALL BE FOG SEALED. AREA TO BE PAINTED SHALL BE FOG SEALED PRIOR TO PAINTING.

TYPE 2 RPM RAISED FACE COLORS	
TYPE 2WR	WHITE AND RED
TYPE 2YR	YELLOW AND RED
TYPE 2YY	YELLOW AND YELLOW
TYPE 2WW	WHITE AND WHITE
TYPE 2W	WHITE – ONE SIDE

FOR ADDITIONAL INFORMATION ON RAISED PAVEMENT MARKINGS SEE WASHINGTON STANDARD SPECIFICATIONS SECTION 9–21.

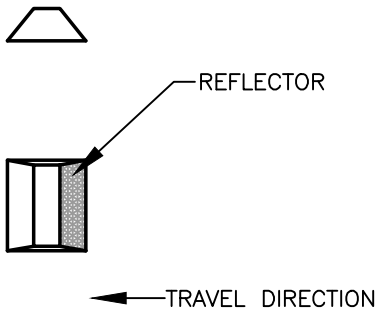

TYPE 2 RPM
REFLECTORS ON ONE SIDE

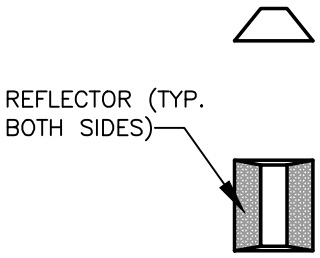

TYPE 2 RPM
REFLECTORS ON BOTH SIDES

REV NO.	DATE	BY	APPR
1	8/08	RAW	AGE
2	1/15	RAW	AGE
3	3/17	RAW	CJC
4	7/18	RAW	CJC
5	7/19	RAW	CJC
6	9/21	RAW	CJC

PUBLIC WORKS – STREETS AND TRANSPORTATION

APPROVED BY: TRAFFIC ENGINEER MANAGER

APPROVED DATE: 9/1/2021

CITY OF Vancouver WASHINGTON

SIGNING AND STRIPING GENERAL NOTES

STANDARD PLAN NUMBER T29–20

I:\CITYAPPS\AUTOCAD\STD_DETAILS\DRAWING_FILES\T29-20

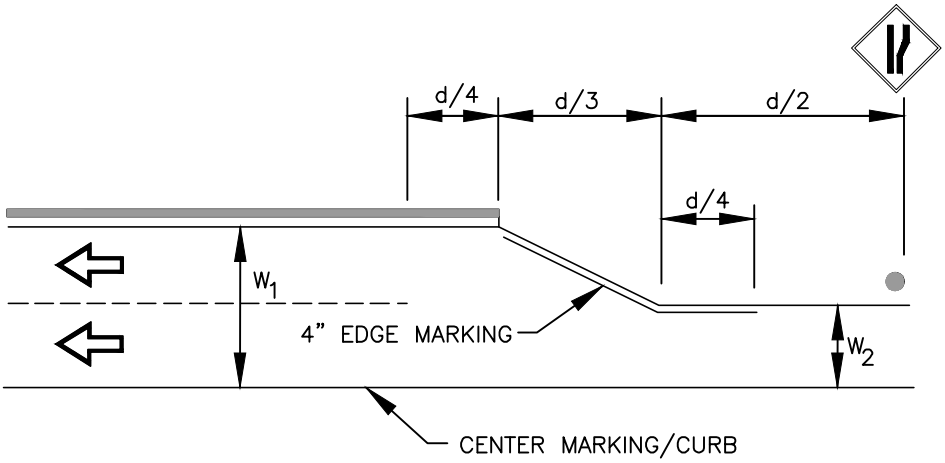

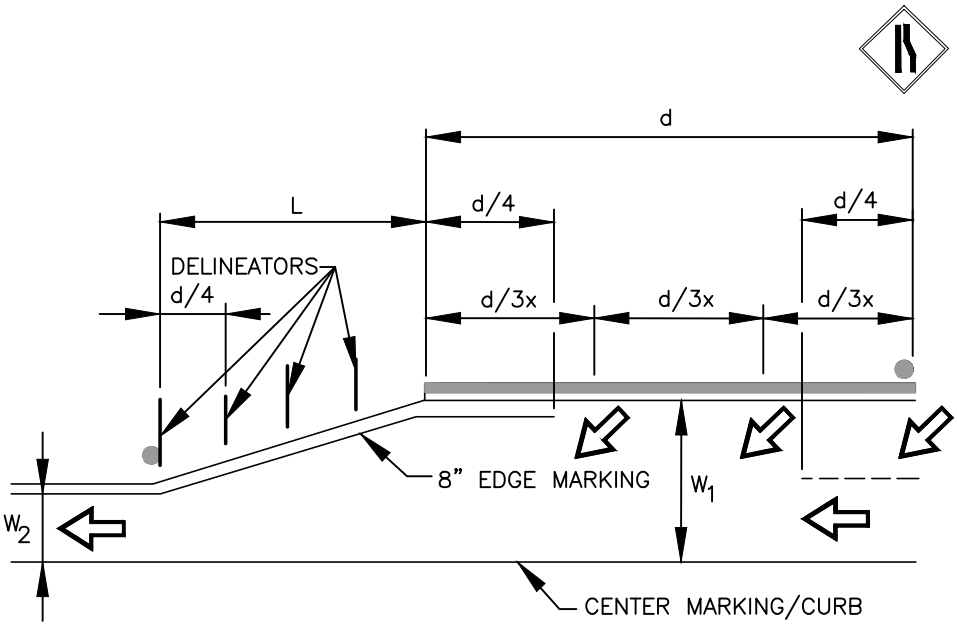

$L = \frac{WS^2}{60}$ (S<45MPH)

L=WS (S≥45 MPH)

S= DESIGN SPEED OR 85 PERCENTILE SPEED, WHICHEVER IS HIGHER

$W = W_1 - W_2$

d=12.5(S)

REV NO.	DATE	BY	APPR
1	1/05	RAW	AGE
2	3/06	RAW	AGE
3	2/07	RAW	AGE
4	8/08	RAW	AGE
5	1/15	RAW	CJC
6	9/21	RAW	CJC

PUBLIC WORKS – STREETS AND TRANSPORTATION

APPROVED BY: TRAFFIC ENGINEER MANAGER

APPROVED DATE: 9/1/2021

CITY OF Vancouver WASHINGTON

PAVEMENT WIDTH TRANSITION SIGNS AND MARKINGS

STANDARD PLAN NUMBER

T29–21

I:\CITYAPPS\AUTOCAD\STD_DETAILS\DRAWING_FILES\T29-21

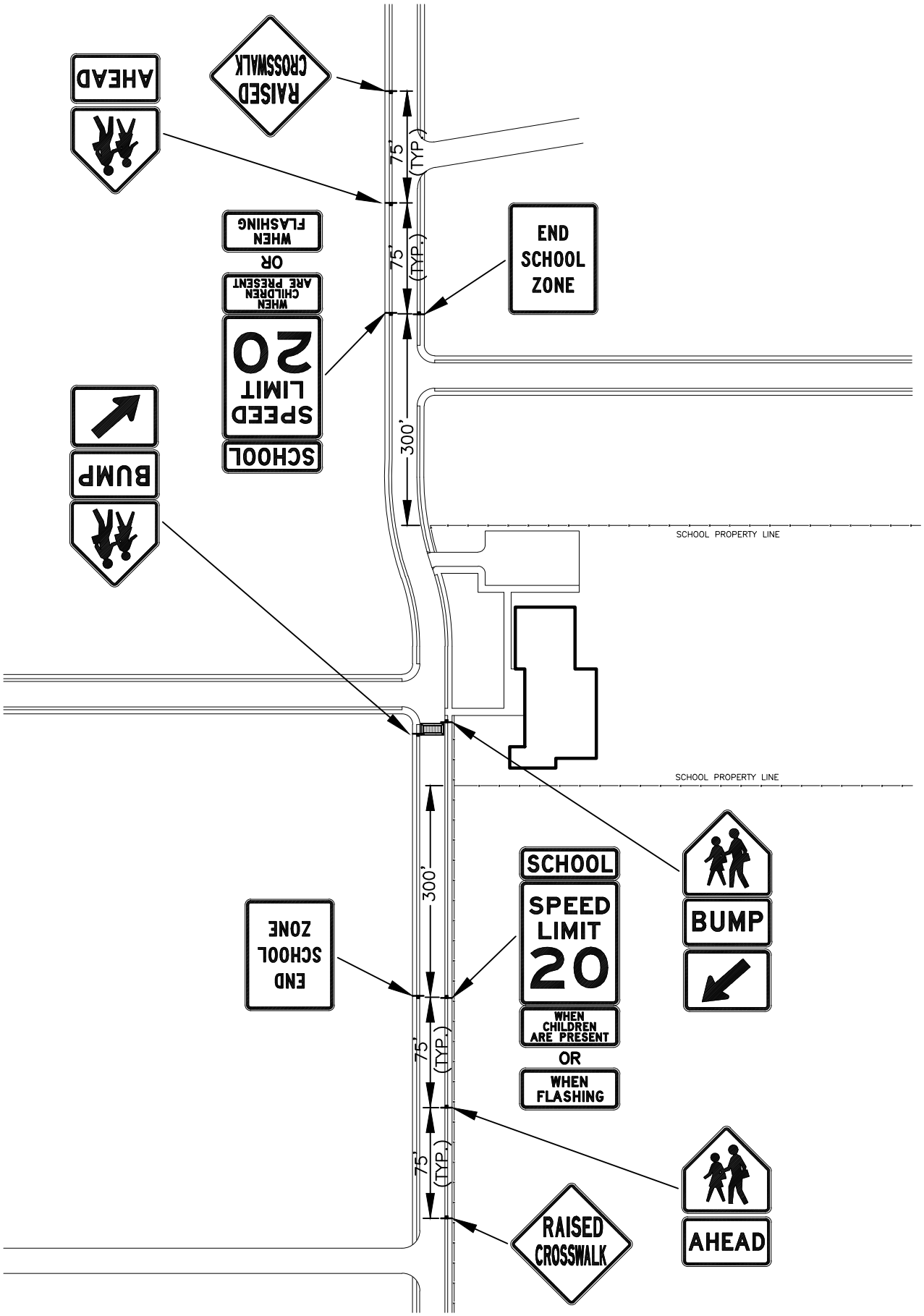

REV NO.	DATE	BY	APPR
1	8/04	RAW	AGE
2	3/06	RAW	AGE
3	2/07	RAW	AGE
4	8/08	RAW	AGE
5	1/15	RAW	CJC
6	9/21	RAW	CJC

PUBLIC WORKS – STREETS AND TRANSPORTATION

APPROVED BY: TRAFFIC ENGINEER MANAGER

APPROVED DATE: 9/1/2021

CITY OF Vancouver WASHINGTON

TYPICAL SIGNING FOR SCHOOL AREA TRAFFIC CONTROL WITH RAISED CROSSWALK

STANDARD PLAN NUMBER

T29–22

I:\CITYAPPS\AUTOCAD\STD_DETAILS\DRAWING_FILES\T29-22

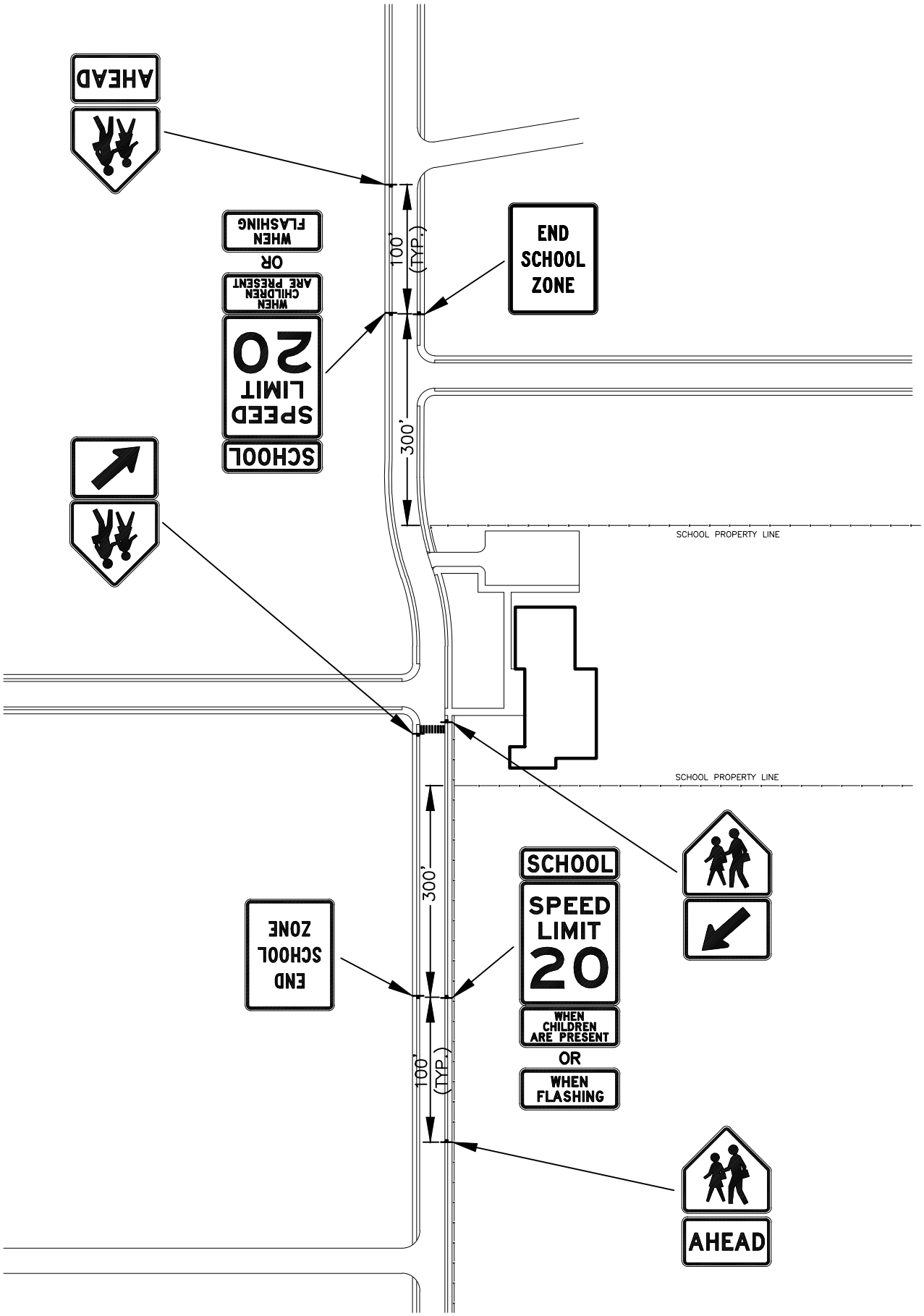

REV NO.	DATE	BY	APPR
1	8/04	RAW	AGE
2	3/06	RAW	AGE
3	2/07	RAW	AGE
4	8/08	RAW	AGE
5	1/15	RAW	CJC
6	9/21	RAW	CJC

PUBLIC WORKS – STREETS AND TRANSPORTATION

APPROVED BY: TRAFFIC ENGINEER MANAGER

APPROVED DATE: 9/1/2021

CITY OF Vancouver WASHINGTON

TYPICAL SIGNING FOR SCHOOL AREA TRAFFIC CONTROL

STANDARD PLAN NUMBER

T29–23

I:\CITYAPPS\AUTOCAD\STD_DETAILS\DRAWING_FILES\T29-23

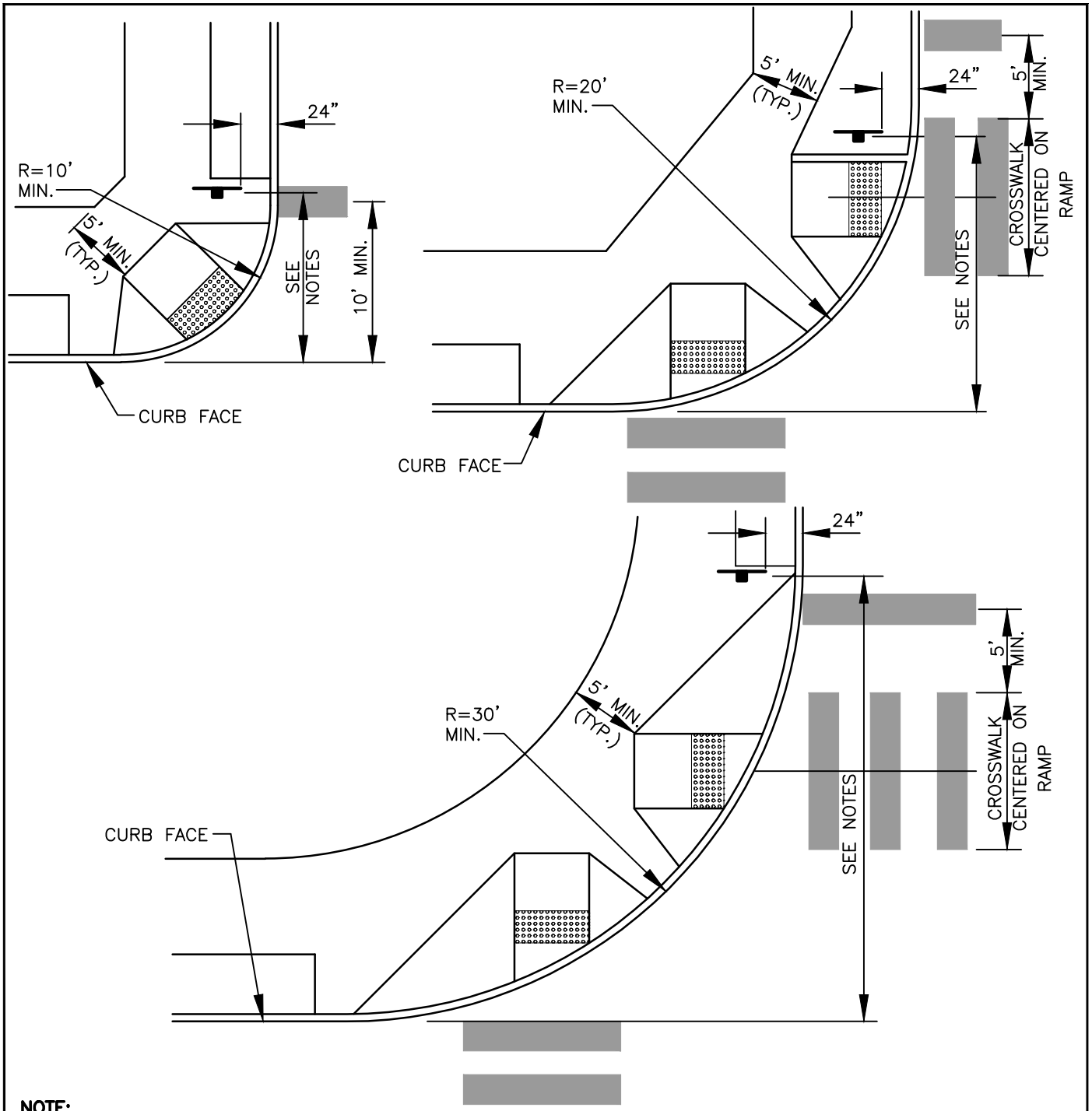

NOTE:

THE STOP SIGN SHALL BE LOCATED AS CLOSE AS PRACTICAL TO THE INTERSECTION IT REGULATES, WHILE OPTIMIZING ITS VISIBILITY.

GUIDANCE:
STOP BARS, WHEN USED TO SUPPLEMENT A STOP SIGN, SHOULD BE AT THE POINT WHERE THE USER SHOULD STOP.

OPTION:
AT WIDE–THROAT INTERSECTIONS OR WHERE TWO OR MORE APPROACH LANES OF TRAFFIC EXIST ON THE SIGNED APPROACH, OBSERVANCE OF THE STOP CONTROL MAY BE IMPROVED BY THE INSTALLATION OF AN ADDITIONAL STOP SIGN ON THE LEFT SIDE OF THE ROAD AND/OR USE OF A STOP BAR. AT CHANNELIZED INTERSECTIONS, THE ADDITIONAL STOP SIGN MAY BE EFFECTIVELY PLACED ON A CHANNELIZING ISLAND.

FOR ADDITIONAL INFORMATION, SEE MUTCD MANUAL SECTION 2B.06 FOR STOP SIGN PLACEMENT.

REV NO.	DATE	BY	APPR
1	3/06	RAW	AGE
2	2/07	RAW	AGE
3	8/08	RAW	AGE
4	1/15	RAW	AGE
5	7/18	RAW	CJC
6	9/21	RAW	CJC

PUBLIC WORKS – STREETS AND TRANSPORTATION

APPROVED BY: TRAFFIC ENGINEER MANAGER

APPROVED DATE: 9/1/2021

CITY OF Vancouver WASHINGTON

STOP SIGN, STOP BAR AND CROSSWALK LOCATIONS DETAILS

STANDARD PLAN NUMBER

T29–24

I:\CITYAPPS\AUTOCAD\STD_DETAILS\DRAWING_FILES\T29-24

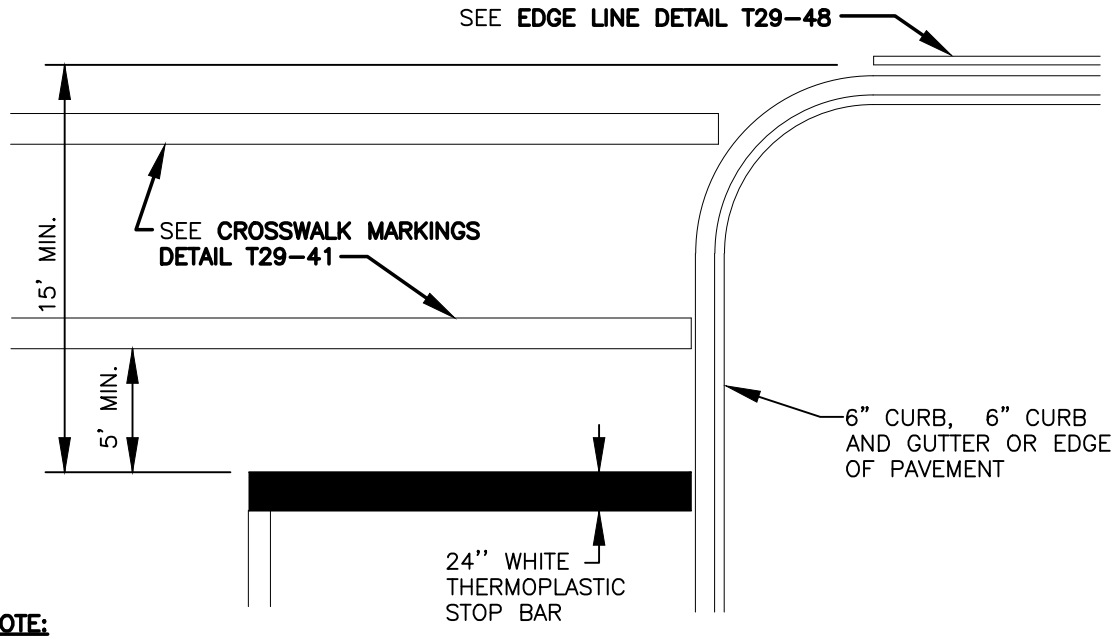

GENERAL NOTE:

LOCATE STOP BAR 5' MIN. IN ADVANCE OF THE NEAREST MARKED CROSSWALK OR IF NO CROSSWALK, 15' MIN. IN BACK OF THE EXTENDED FOG LINE. VERIFY SIGHT DISTANCE AND TRUCK MOVEMENTS.

STOP BAR

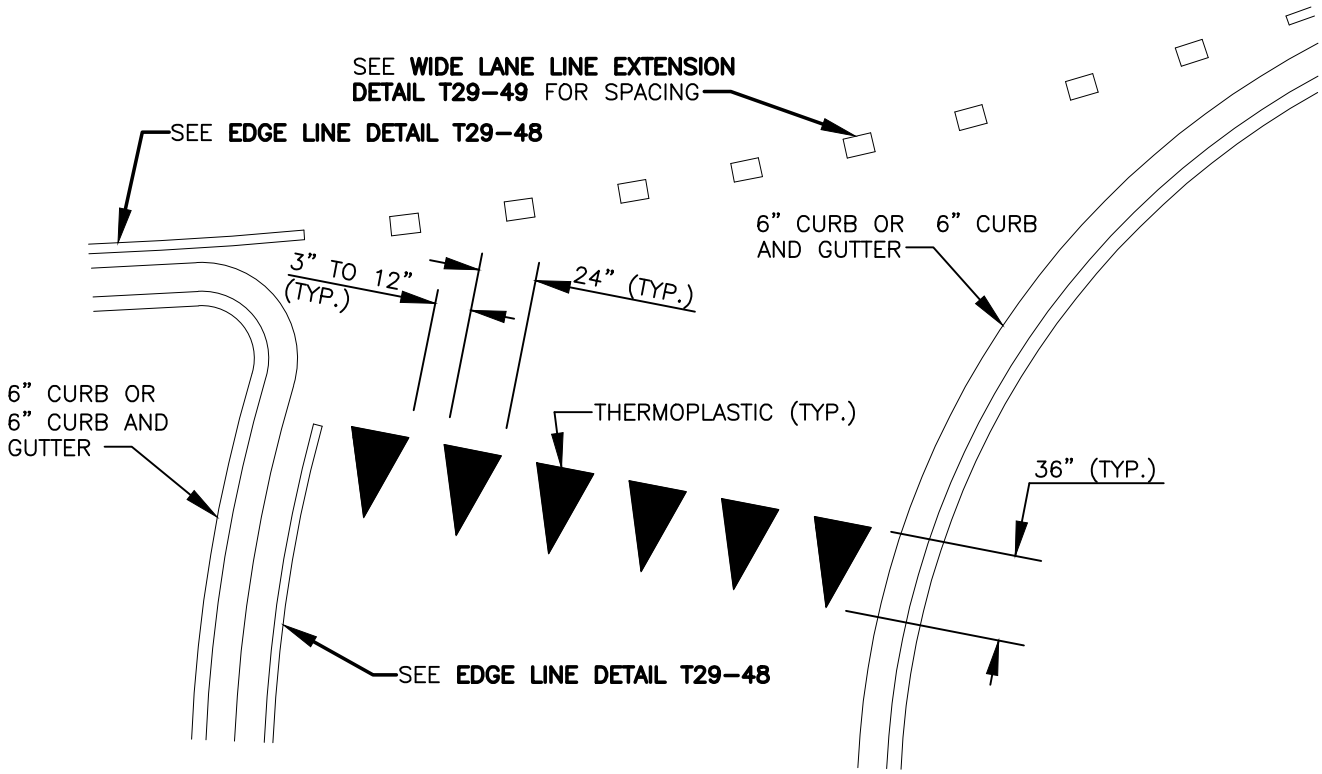

YIELD LINE BAR

NOTE:

SEE THE 2009 EDITION OF MUTCD, **SECTIONS 3B.16, 3B.24, 3B.25** AND **FIGURES 3B–14, 3B–26, 3B–27** FOR ADDITIONAL CIRCULAR INTERSECTION INFORMATION.

REV NO.	DATE	BY	APPR
1	1/05	RAW	AGE
2	3/06	RAW	AGE
3	2/07	RAW	AGE
4	8/08	RAW	AGE
5	7/14	RAW	CJC
6	9/21	RAW	CJC

PUBLIC WORKS – STREETS AND TRANSPORTATION

APPROVED BY: TRAFFIC ENGINEER MANAGER

APPROVED DATE: 9/1/2021

CITY OF Vancouver WASHINGTON

STOP BAR AND YIELD LINE MARKINGS

STANDARD PLAN NUMBER T29–40

I:\CITYAPPS\AUTOCAD\STD_DETAILS\DRAWING_FILES\T29–40

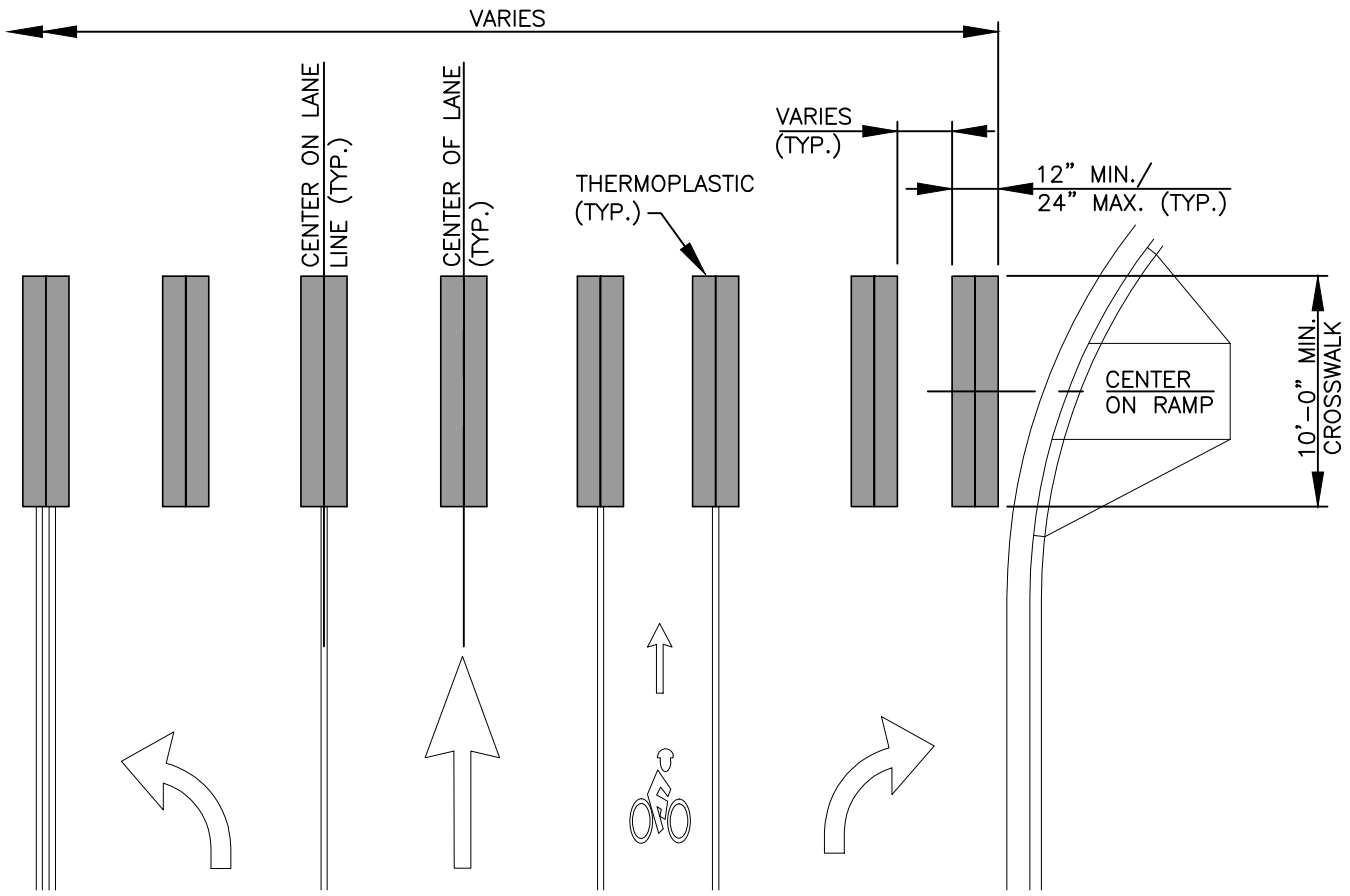

STANDARD CROSSWALK

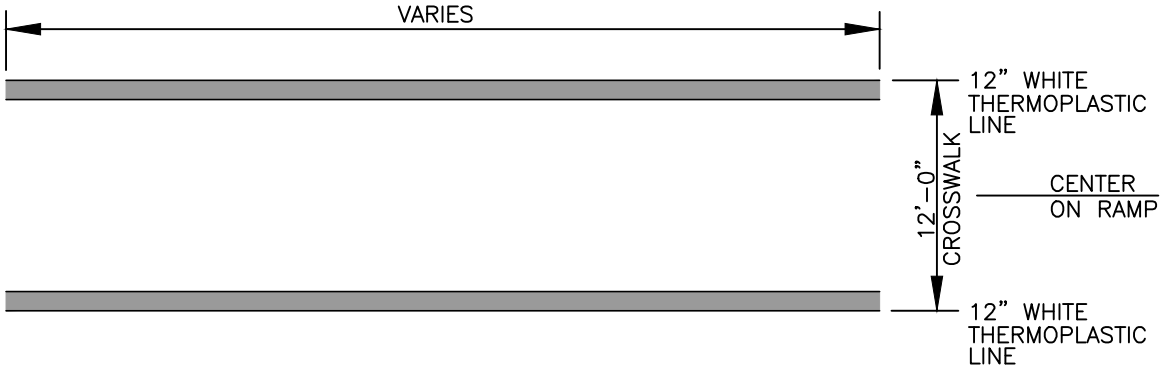

CROSSWALK ALTERNATE

GENERAL NOTE:

1. LOCATE CROSSWALKS CENTERED ON WHEELCHAIR RAMP LOCATIONS OR 5' BACK OF EXTENDED FOG LINE, EDGE OF PAVEMENT OR CURB FACE.

2. USE OF CROSSWALK ALTERNATE ON APPROVAL OF TRAFFIC MANAGER.

REV NO.	DATE	BY	APPR
1	8/04	RAW	AGE
2	3/06	RAW	AGE
3	2/07	RAW	AGE
4	8/08	RAW	AGE
5	1/15	RAW	CJC
6	9/21	RAW	CJC

PUBLIC WORKS – STREETS AND TRANSPORTATION

APPROVED BY: TRAFFIC ENGINEER MANAGER

APPROVED DATE: 9/1/2021

CITY OF Vancouver WASHINGTON

CROSSWALK LINE MARKINGS

STANDARD PLAN NUMBER T29-41

I:\CITYAPPS\AUTOCAD\STD_DETAILS\DRAWING_FILES\T29-41

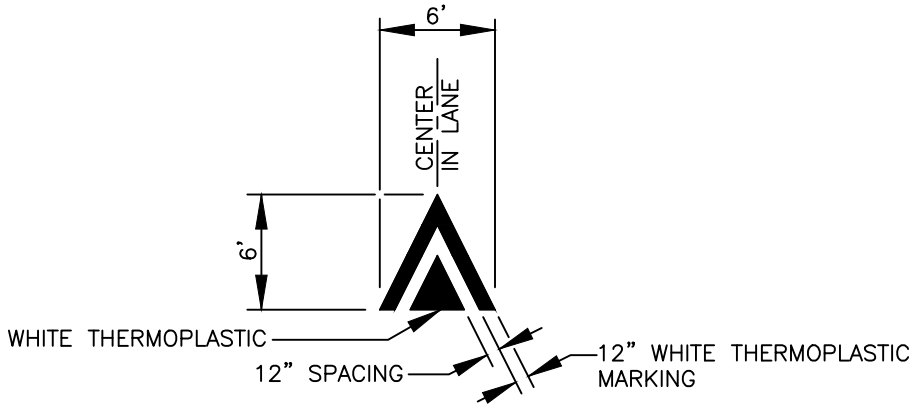

TRIANGLE SPEED BUMP LEGEND

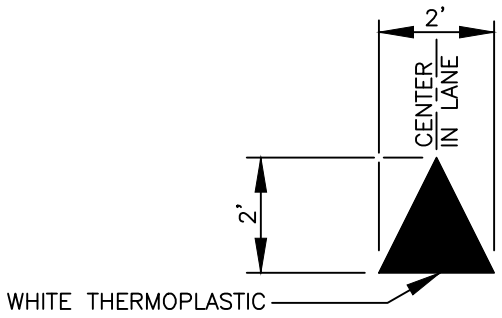

BIKE LANE TRIANGLE SPEED BUMP LEGEND

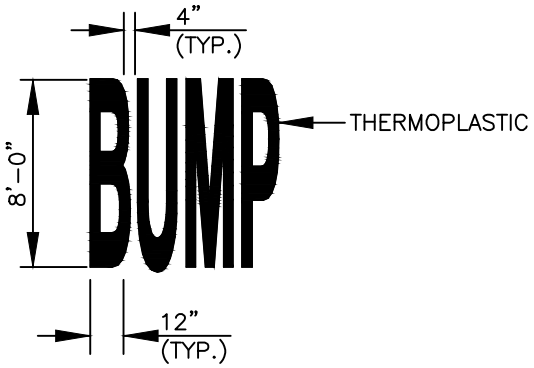

BUMP LEGEND

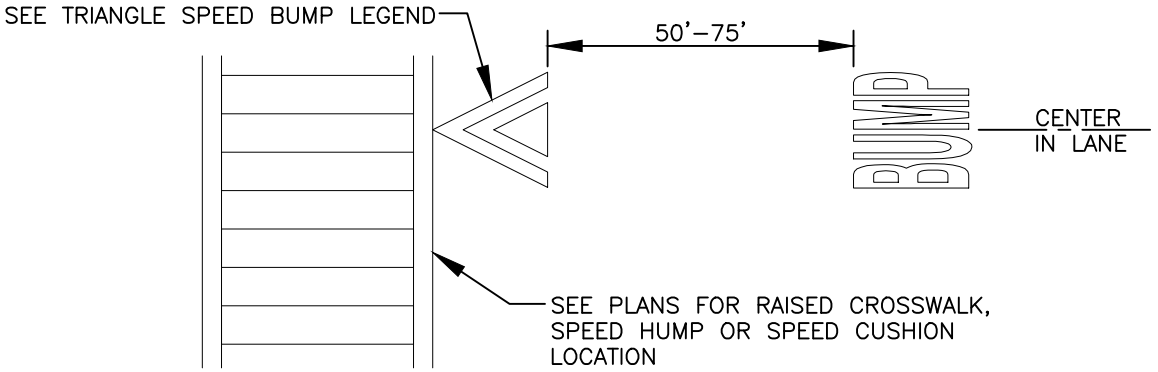

BUMP LEGEND AT RAISED CROSSWALK

REV NO.	DATE	BY	APPR
1	8/04	RAW	AGE
2	3/06	RAW	AGE
3	2/07	RAW	AGE
4	8/08	RAW	AGE
5	1/15	RAW	CJC
6	9/21	RAW	CJC

PUBLIC WORKS – STREETS AND TRANSPORTATION

APPROVED BY: TRAFFIC ENGINEER MANAGER

APPROVED DATE: 9/1/2021

CITY OF Vancouver WASHINGTON

TRIANGLE SPEED BUMP LEGEND AND BUMP LEGEND AT RAISED CROSSWALK

STANDARD PLAN NUMBER

T29-42

I:\CITYAPPS\AUTOCAD\STD_DETAILS\DRAWING_FILES\T29-42

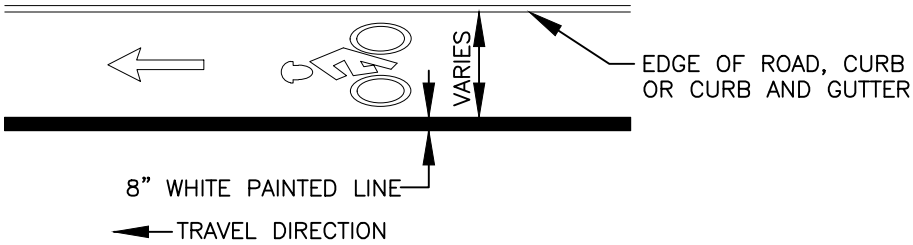

BIKE LANE LINE

LANE WIDTH PREFERABLE 5' TO 6'

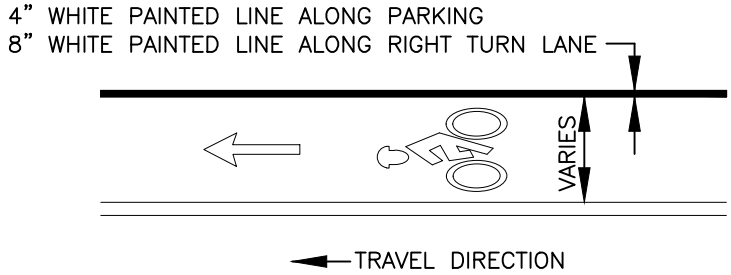

BIKE EDGE LINE

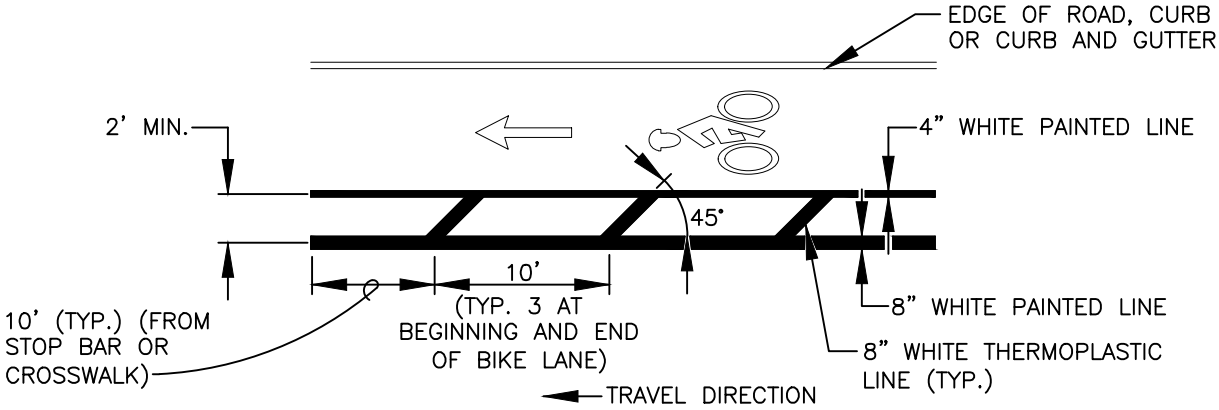

BIKE LANE BUFFER ZONE AREA MARKING

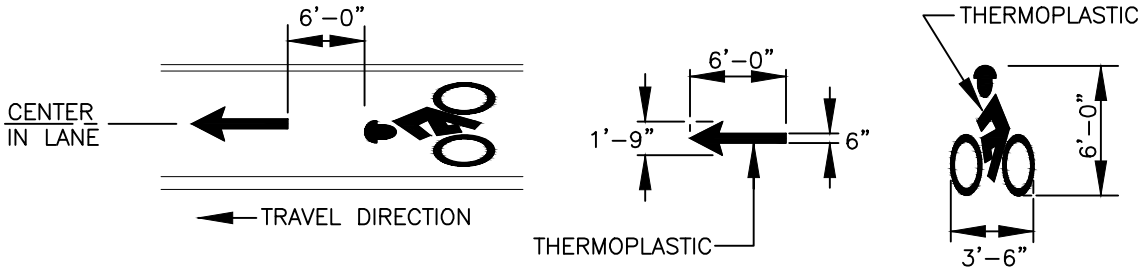

BICYCLE LANE MARKING

BICYCLE LANE MARKING PLACEMENT LOCATIONS:

A) AT THE BEGINNING OF BIKE LANES.

B) AT THE "OUT" SIDE OF THE INTERSECTION.

C) AT MAJOR CHANGES IN DIRECTION.

D) AT INTERVALS NOT TO EXCEED 550' MAX.

E) AT BOTH SIDES OF THE VEHICULAR RIGHT TURN LANE WHERE BIKE LANE TRANSITIONS FROM EDGE OF ROAD TO BETWEEN THROUGH LANE AND RIGHT TURN LANE, SEE MUTCD FIGURE 9C-4.

REV NO.	DATE	BY	APPR
1	8/08	RAW	AGE
2	1/15	RAW	AGE
3	3/16	RAW	CJC
4	7/19	RAW	CJC
5	10/19	RAW	CJC
6	9/21	RAW	CJC

PUBLIC WORKS – STREETS AND TRANSPORTATION

APPROVED BY: TRAFFIC ENGINEER MANAGER

APPROVED DATE: 9/1/2021

CITY OF Vancouver WASHINGTON

BIKE LANE MARKINGS AND LEGENDS

STANDARD PLAN NUMBER T29-43

P:\CITYAPPS\AUTOCAD\STD_DETAILS\DRAWING_FILES\T29-43

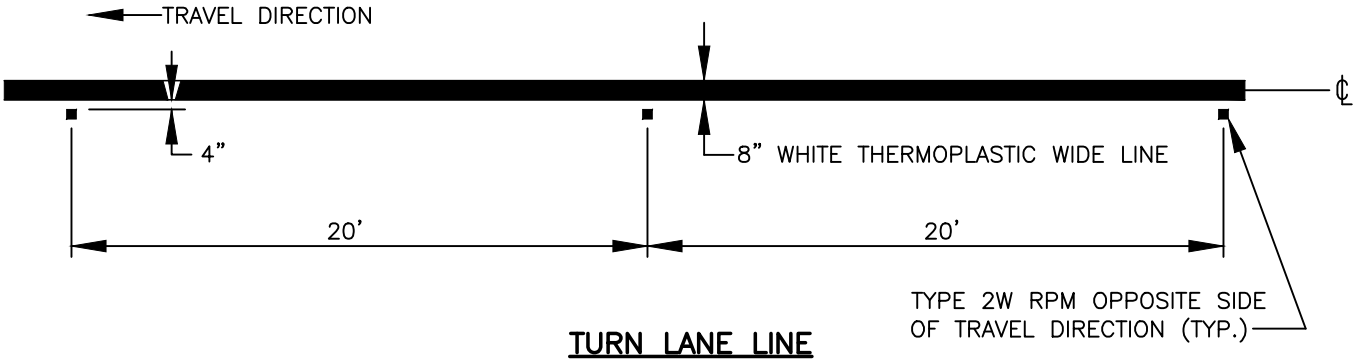

TURN LANE LINE

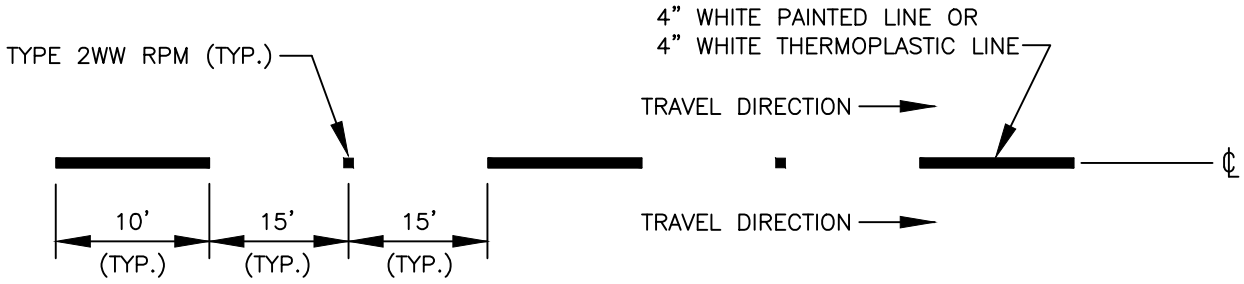

LANE LINE (PAINT OR THERMOPLASTIC)

WITH TWO–WAY WHITE RAISED
PAVEMENT MARKERS

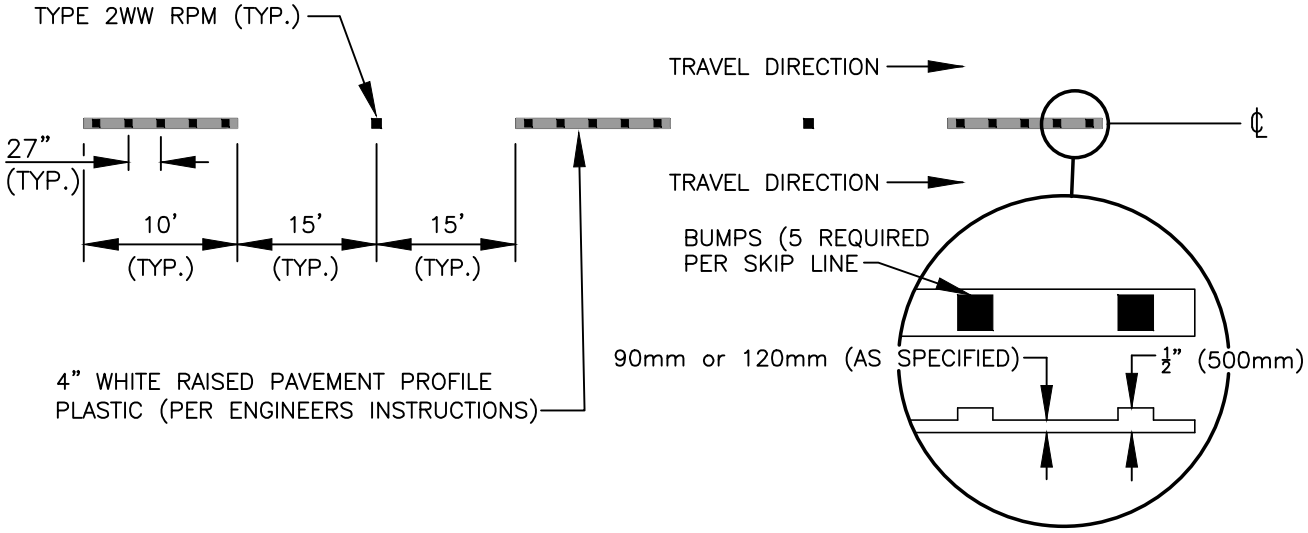

LANE LINE (PROFILE)

WITH TWO–WAY WHITE RAISED
PAVEMENT MARKERS

REV NO.	DATE	BY	APPR
1	8/08	RAW	AGE
2	7/14	RAW	AGE
3	7/18	RAW	CJC
4	7/19	RAW	CJC
5	10/19	RAW	CJC
6	9/21	RAW	CJC

PUBLIC WORKS – STREETS AND TRANSPORTATION

APPROVED BY: TRAFFIC ENGINEER MANAGER

APPROVED DATE: 9/1/2021

CITY OF Vancouver WASHINGTON

WHITE LANE LINE MARKINGS

STANDARD PLAN NUMBER

T29–44

I:\CITYAPPS\AUTOCAD\STD_DETAILS\DRAWING_FILES\T29-44

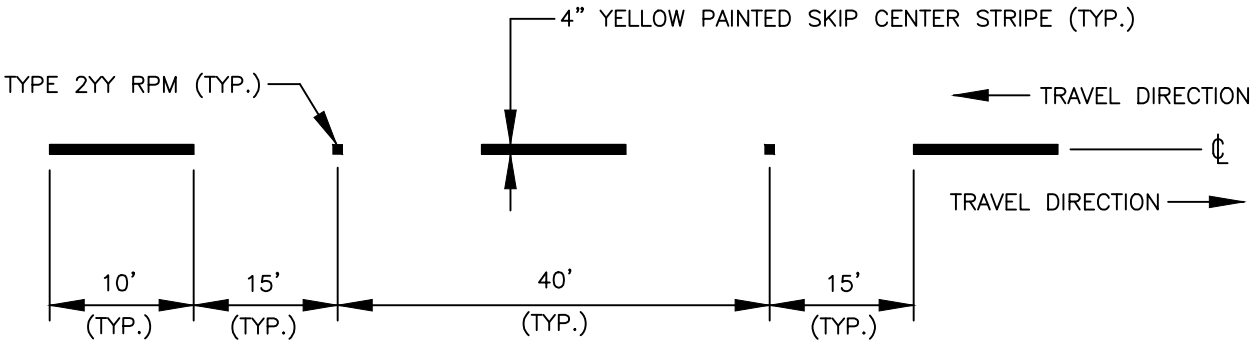

PAINTED TWO-WAY CENTER LINE MARKINGS

WITH TYPE 2YY BI-DIRECTIONAL RAISED
PAVEMENT MARKERS

REV NO.	DATE	BY	APPR
1	2/07	RAW	AGE
2	8/08	RAW	AGE
3	1/15	RAW	CJC
4	7/18	RAW	CJC
5	7/19	RAW	CJC
6	9/21	RAW	CJC

PUBLIC WORKS – STREETS AND TRANSPORTATION

APPROVED BY: TRAFFIC ENGINEER MANAGER

APPROVED DATE: 9/1/2021

CITY OF Vancouver WASHINGTON

YELLOW CENTERLINE MARKINGS

STANDARD PLAN NUMBER

T29-45

I:\CITYAPPS\AUTOCAD\STD_DETAILS\DRAWING_FILES\T29-45

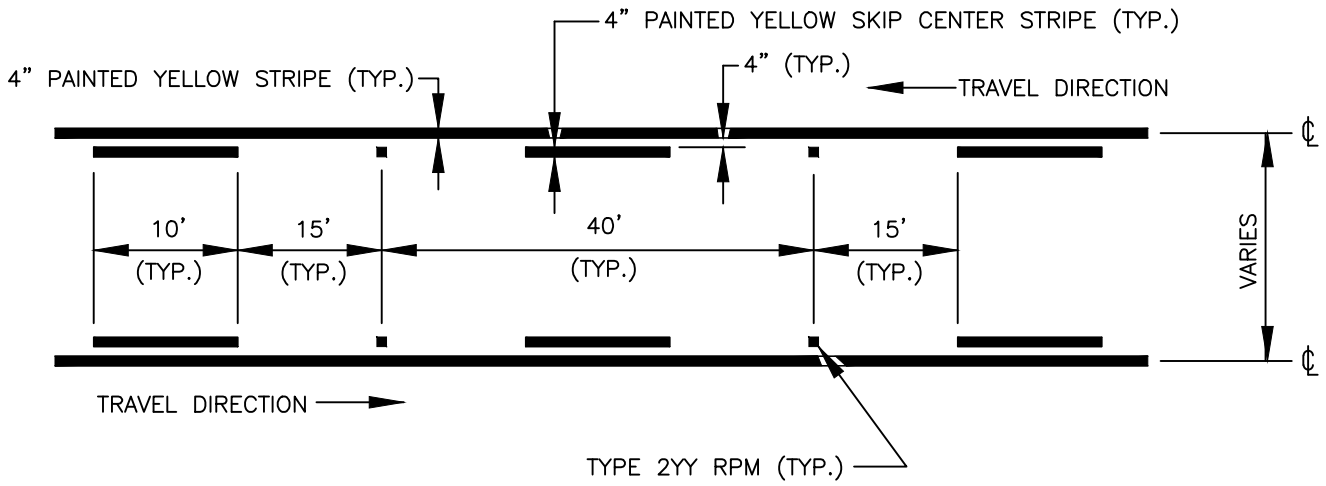

PAINTED TWO-WAY LEFT TURN LANE MARKINGS

REV NO.	DATE	BY	APPR
1	2/07	RAW	AGE
2	8/08	RAW	AGE
3	1/15	RAW	CJC
4	7/18	RAW	CJC
5	7/19	RAW	CJC
6	9/21	RAW	CJC

PUBLIC WORKS – STREETS AND TRANSPORTATION

APPROVED BY: TRAFFIC ENGINEER MANAGER

APPROVED DATE: 9/1/2021

CITY OF Vancouver WASHINGTON

TWO-WAY LEFT TURN LANE MARKINGS

STANDARD PLAN NUMBER

T29-46

I:\CITYAPPS\AUTOCAD\STD_DETAILS\DRAWING_FILES\T29-46

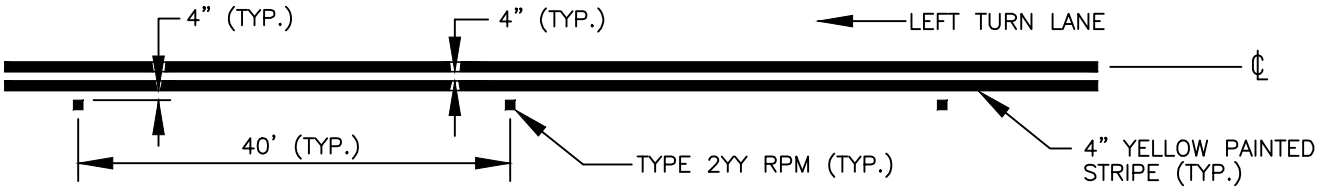

PAINTED MEDIAN STRIPE MARKINGS

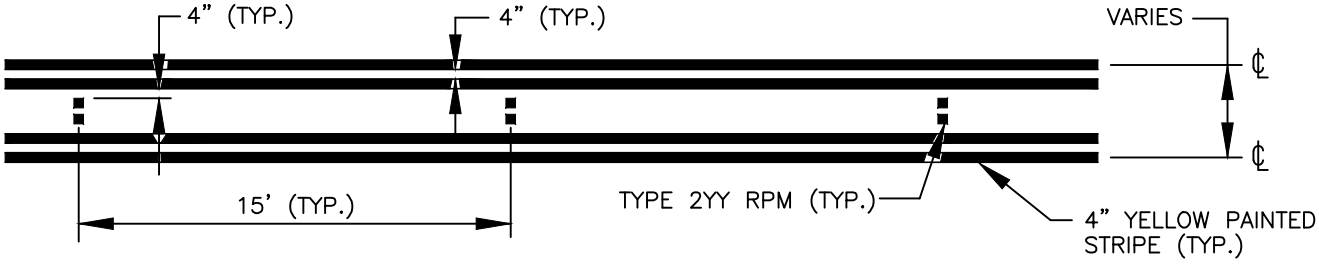

PAINTED MEDIAN STRIPE MARKINGS (VARYING WIDTH)

I:\CITYAPPS\AUTOCAD\STD_DETAILS\DRAWING_FILES\T29-47

REV NO.	DATE	BY	APPR
1	2/07	RAW	AGE
2	8/08	RAW	AGE
3	1/15	RAW	CJC
4	7/18	RAW	CJC
5	7/19	RAW	CJC
6	9/21	RAW	CJC

PUBLIC WORKS – STREETS AND TRANSPORTATION

APPROVED BY: TRAFFIC ENGINEER MANAGER

APPROVED DATE: 9/1/2021

CITY OF Vancouver WASHINGTON

STRIPED MEDIAN MARKINGS

STANDARD PLAN NUMBER

T29-47

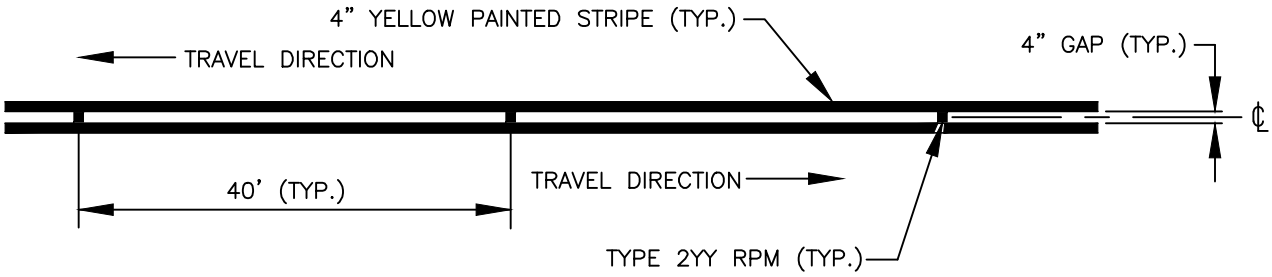

PAINTED DOUBLE YELLOW CENTER LINE MARKINGS

WITH 2YY RAISED PAVEMENT MARKERS

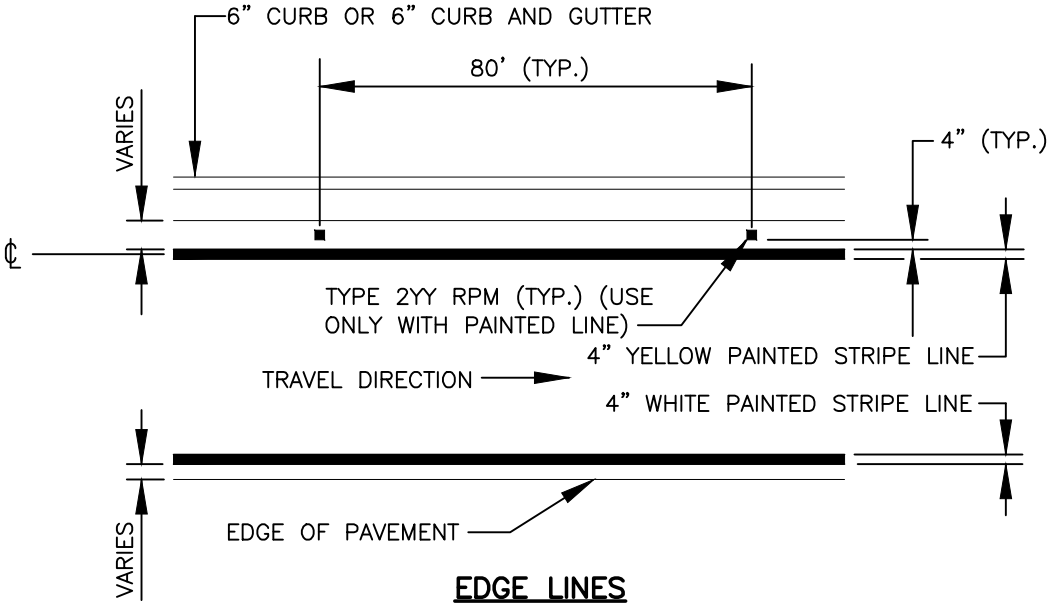

EDGE LINES

REV NO.	DATE	BY	APPR
1	8/08	RAW	AGE
2	1/15	RAW	CJC
3	3/17	RAW	CJC
4	7/18	RAW	CJC
5	7/19	RAW	CJC
6	9/21	RAW	CJC

PUBLIC WORKS – STREETS AND TRANSPORTATION

APPROVED BY: TRAFFIC ENGINEER MANAGER

APPROVED DATE: 9/1/2021

CITY OF Vancouver WASHINGTON

CENTER LINE AND EDGE LINE MARKINGS

STANDARD PLAN NUMBER

T29–48

I:\CITYAPPS\AUTOCAD\STD_DETAILS\DRAWING_FILES\T29-48

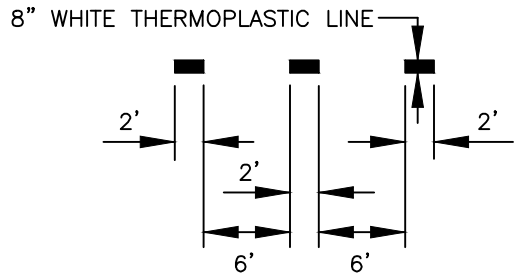

BIKE LANE SKIP LINE

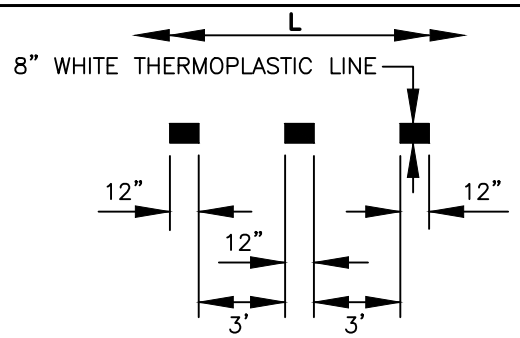

$L = \frac{V^2}{5}$ +100' FOR 85% SPEED, V=≤45 MPH

L=12V +100' FOR 85% SPEED, V=>45 MPH

LANE DROP SKIP LINE

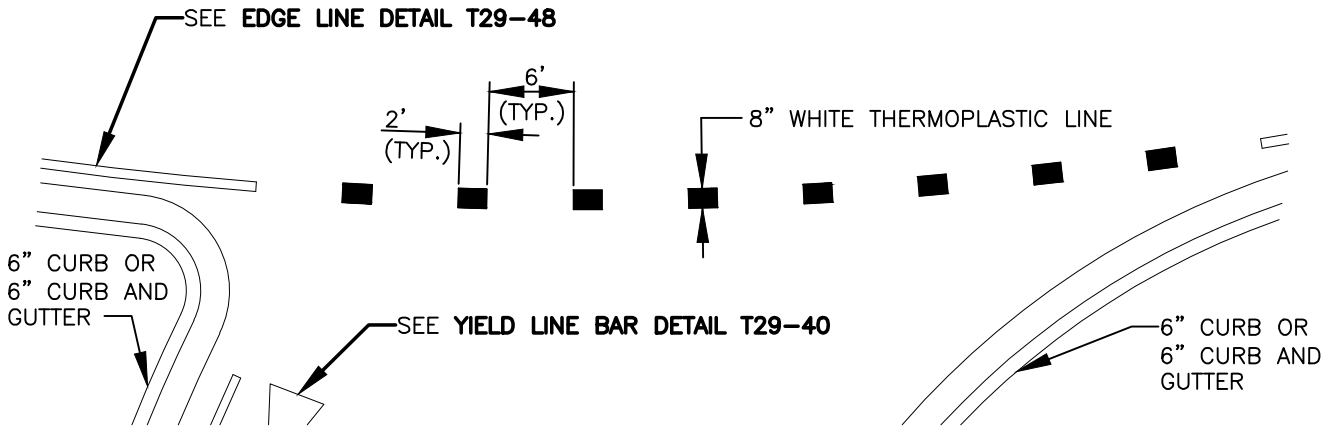

WIDE LANE LINE EXTENSION

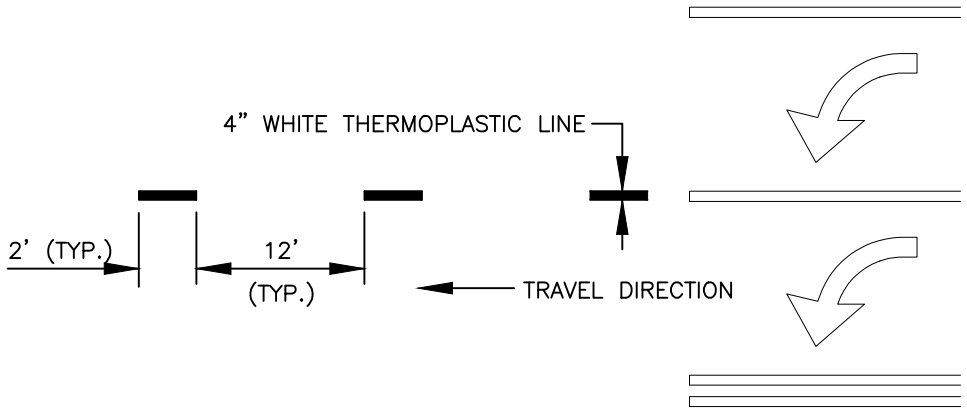

LANE LINE EXTENSIONS THROUGH INTERSECTIONS

REV NO.	DATE	BY	APPR
1	8/08	RAW	AGE
2	7/14	RAW	CJC
3	7/18	RAW	CJC
4	7/19	RAW	CJC
5	2/21	OIS	CJC
6	9/21	RAW	CJC

PUBLIC WORKS – STREETS AND TRANSPORTATION

APPROVED BY: TRAFFIC ENGINEER MANAGER

APPROVED DATE: 9/1/2021

CITY OF Vancouver WASHINGTON

SKIP LINE AND EXTENSION LANE MARKINGS

STANDARD PLAN NUMBER

T29-49

P:\CITYAPPS\AUTOCAD\STD_DETAILS\DRAWING_FILES\T29-49

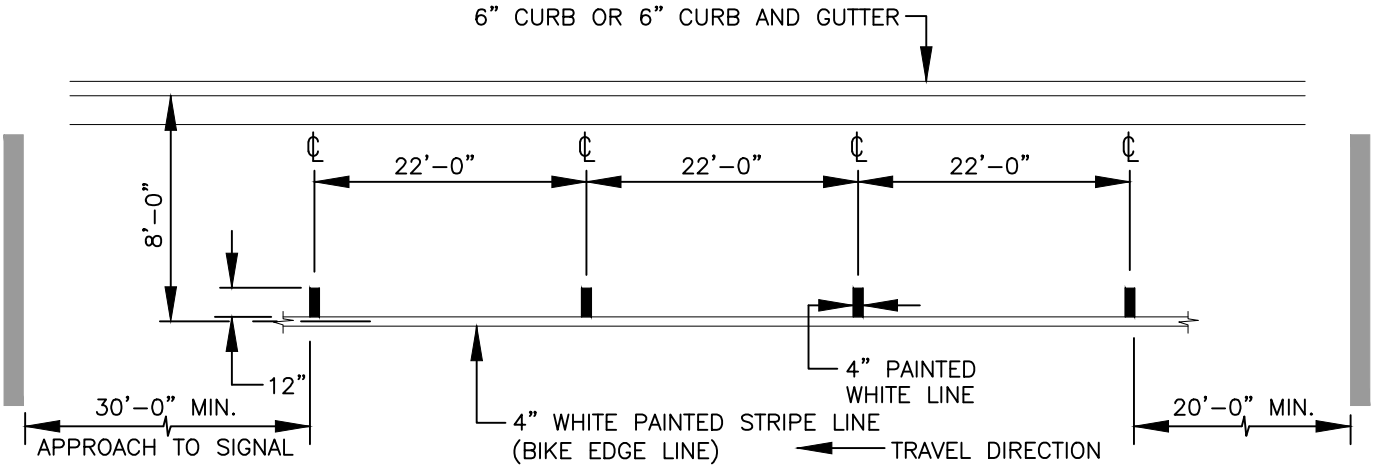

PARKING STRIPE ALONG BIKE LANE

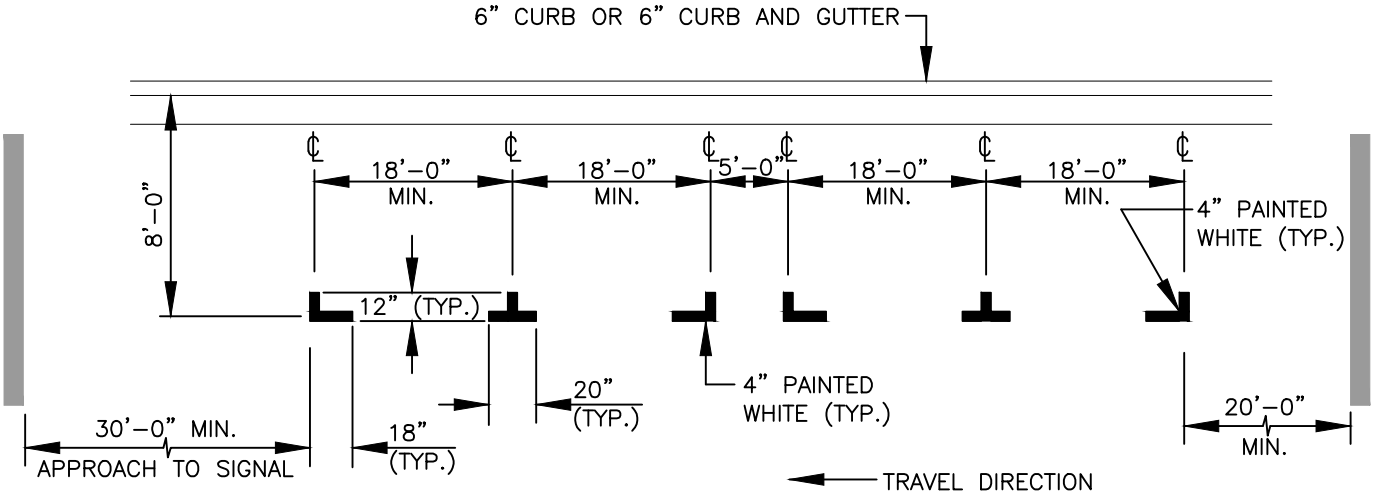

PARKING TEE TYPE 1

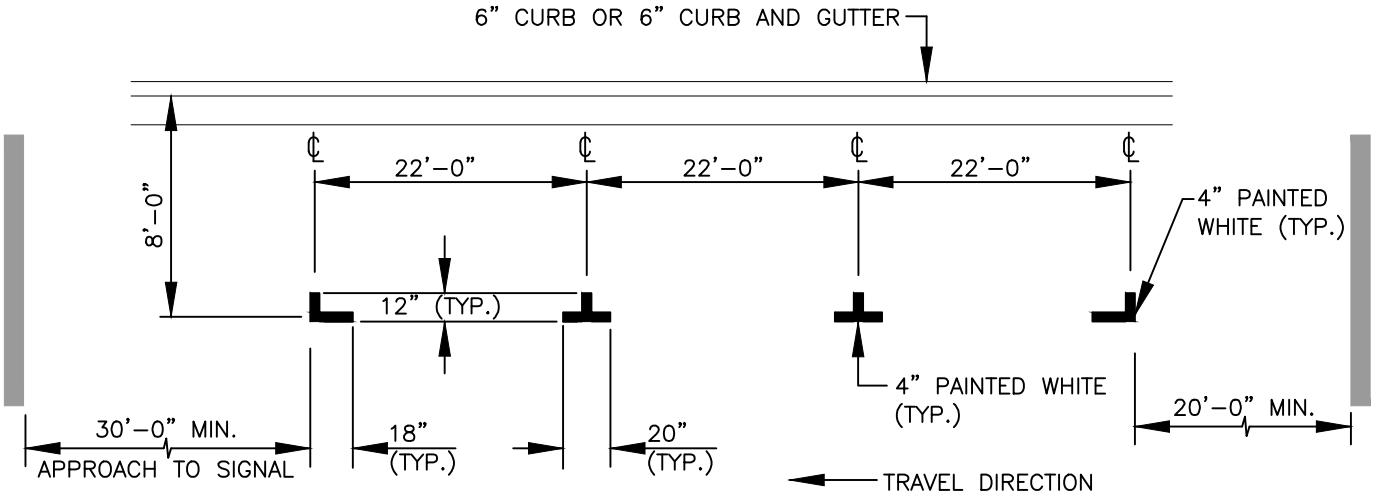

PARKING TEE TYPE 2

REV NO.	DATE	BY	APPR
1	8/04	RAW	AGE
2	3/06	RAW	AGE
3	2/07	RAW	AGE
4	8/08	RAW	AGE
5	1/15	RAW	CJC
6	9/21	RAW	CJC

PUBLIC WORKS – STREETS AND TRANSPORTATION

APPROVED BY: TRAFFIC ENGINEER MANAGER

APPROVED DATE: 9/1/2021

CITY OF Vancouver WASHINGTON

ON-STREET PARALLEL PARKING STALL MARKINGS

STANDARD PLAN NUMBER

T29-50

I:\CITYAPPS\AUTOCAD\STD_DETAILS\DRAWING_FILES\T29-50

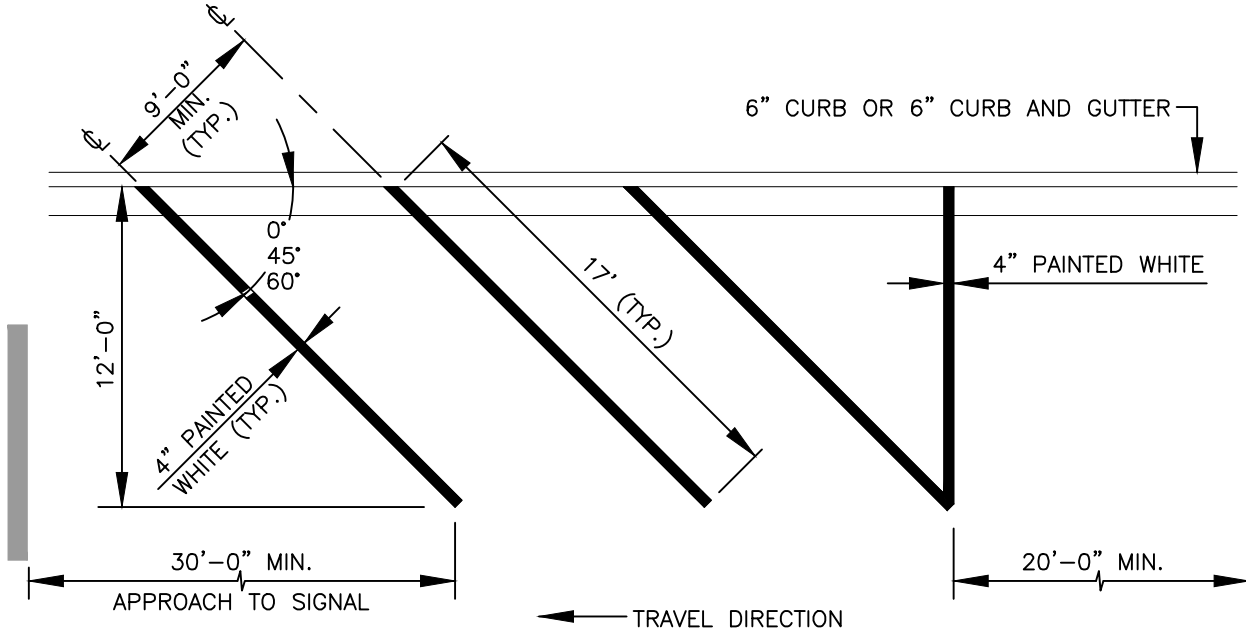

ANGLE PARKING STRIPE

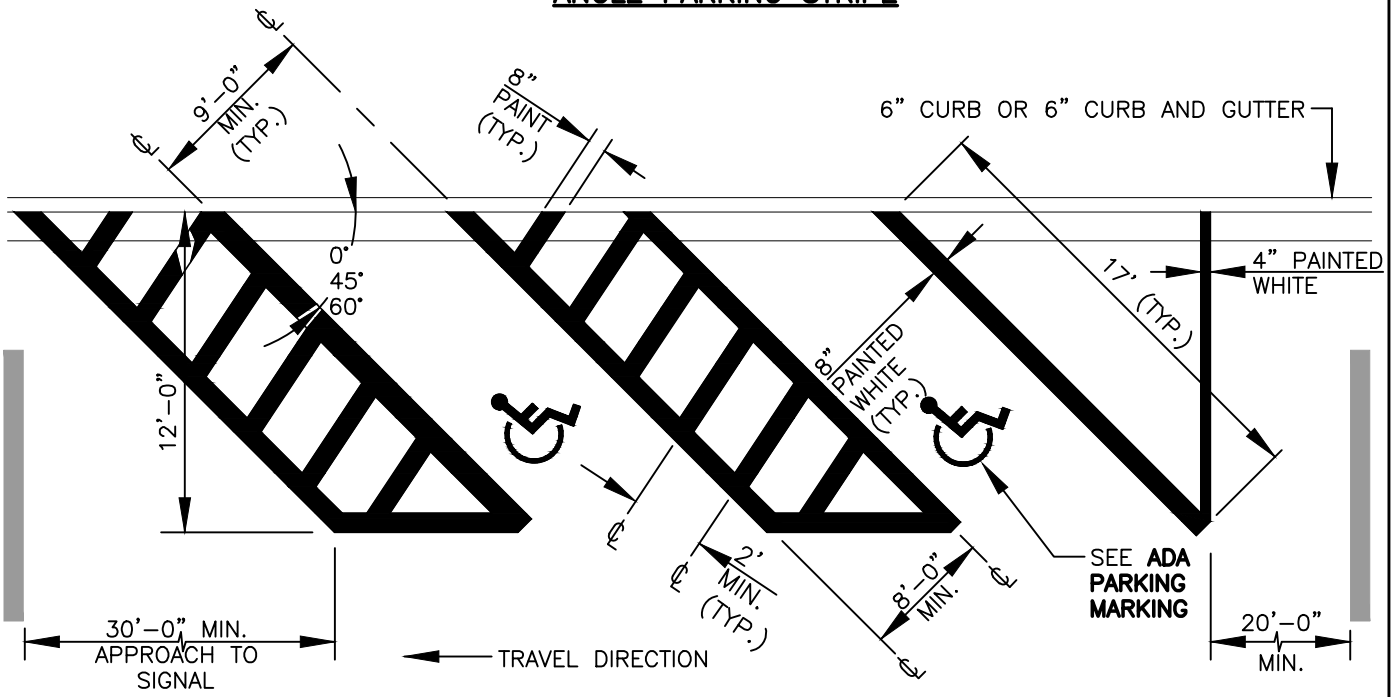

ADA ANGLE PARKING STRIPE

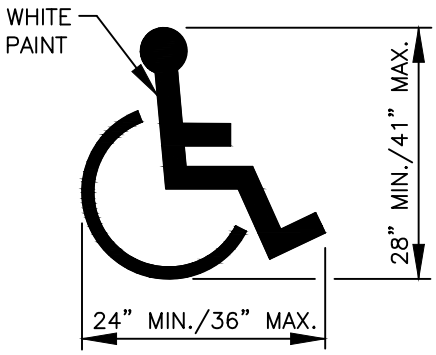

ADA PARKING MARKING

NOTES:

1. SEE THE MILLENNIUM EDITION OF MUTCD, **SECTION 3B.18** AND **FIGURE 3B-18** FOR ADDITIONAL PARKING SPACE MARKING INFORMATION.
2. SEE **VMC TABLE 20.945.040-2** FOR ADDITIONAL DIMENSIONS INFORMATION.

REV NO.	DATE	BY	APPR
1	1/05	RAW	AGE
2	3/06	RAW	AGE
3	2/07	RAW	AGE
4	8/08	RAW	AGE
5	7/14	RAW	CJC
6	9/21	RAW	CJC

PUBLIC WORKS – STREETS AND TRANSPORTATION

APPROVED BY: TRAFFIC ENGINEER MANAGER

APPROVED DATE: 9/1/2021

CITY OF Vancouver WASHINGTON

ON-STREET AND PARKING FACILITY
ANGLE PARKING STALL MARKINGS

STANDARD PLAN NUMBER
T29-51

I:\CITYAPPS\AUTOCAD\STD_DETAILS\DRAWING_FILES\T29-51

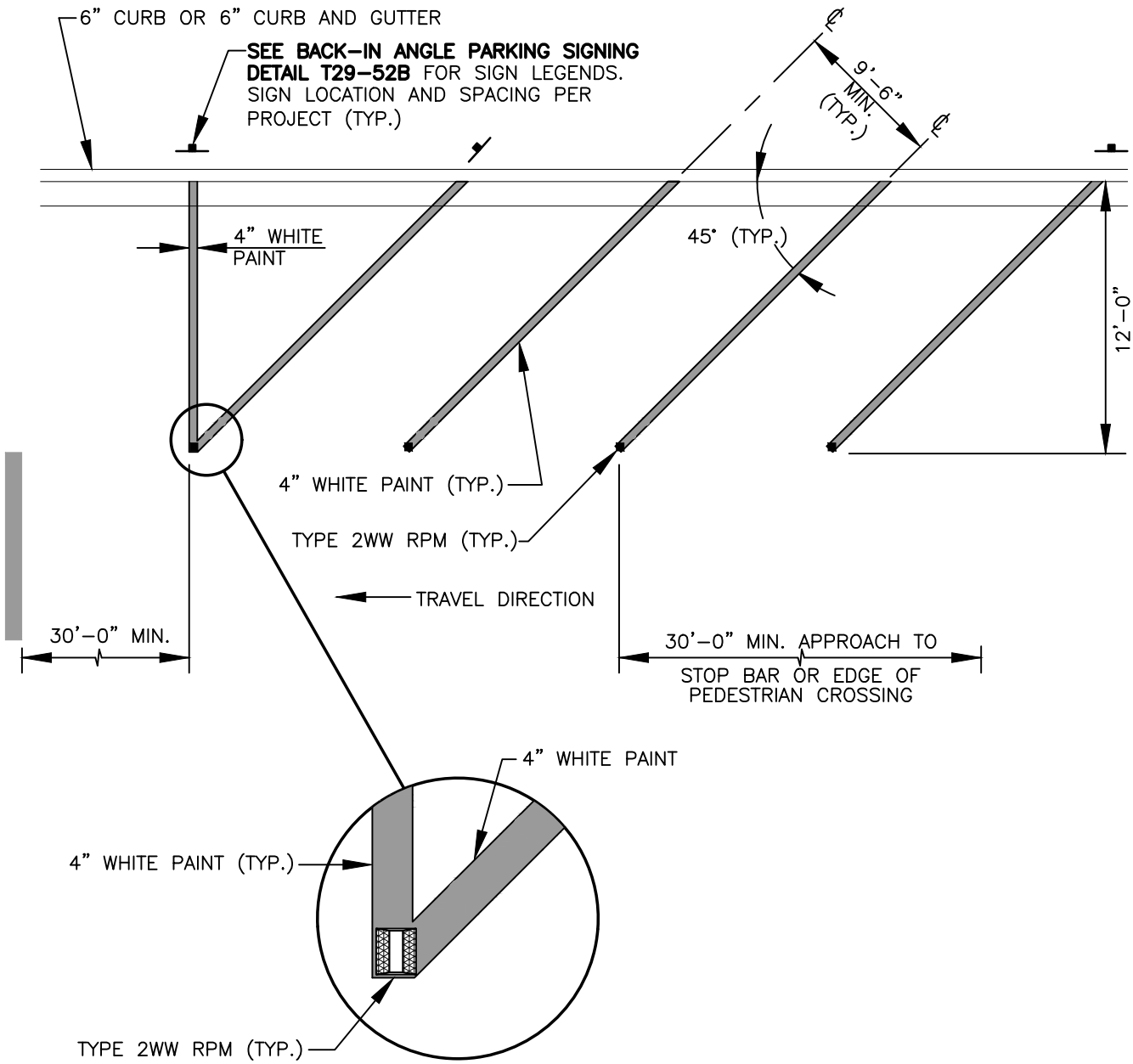

ANGLE BACK IN PARKING STRIPING AND MARKINGS

REV NO.	DATE	BY	APPR
1	8/08	RAW	AGE
2	7/14	RAW	CJC
3	3/17	RAW	CJC
4	7/18	RAW	CJC
5	7/19	RAW	CJC
6	9/21	RAW	CJC

PUBLIC WORKS – STREETS AND TRANSPORTATION

APPROVED BY: TRAFFIC ENGINEER MANAGER

APPROVED DATE: 9/1/2021

CITY OF Vancouver WASHINGTON

ANGLE BACK-IN PARKING STRIPING

STANDARD PLAN NUMBER

T29-52A

I:\CITYAPPS\AUTOCAD\STD_DETAILS\DRAWING_FILES\T29-52A

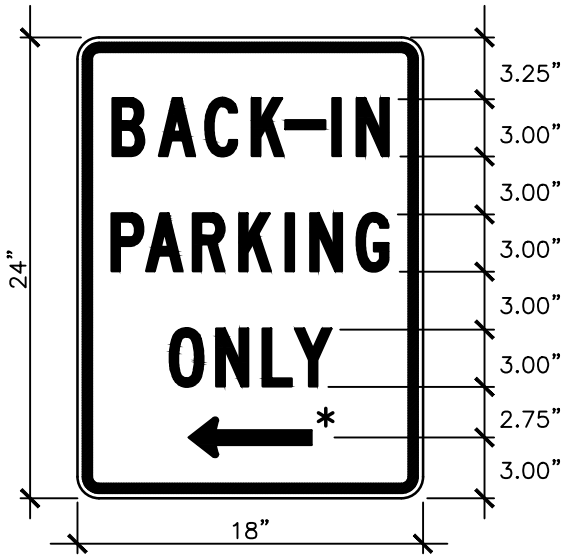

BACK-IN PARKING SIGN OPTION A

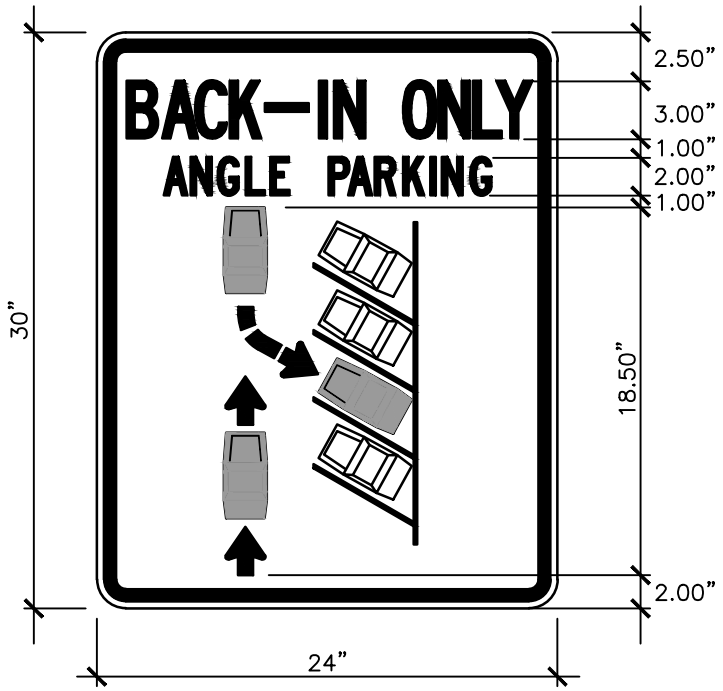

BACK-IN ANGLE PARKING SIGN

SEE ANGLE BACK-IN PARKING STRIPING ON COV STD. PLAN T29-52A FOR LOCATIONS.

REV NO.	DATE	BY	APPR
1	3/06	RAW	AGE
2	2/07	RAW	AGE
3	8/08	RAW	AGE
4	1/15	RAW	CJC
5	9/21	RAW	CJC

PUBLIC WORKS – STREETS AND TRANSPORTATION

APPROVED BY: TRAFFIC ENGINEER MANAGER

APPROVED DATE: 9/1/2021

CITY OF Vancouver WASHINGTON

ANGLE BACK-IN PARKING SIGNING

STANDARD PLAN NUMBER

T29-52B

I:\CITYAPPS\AUTOCAD\STD_DETAILS\DRAWING_FILES\T29-52B

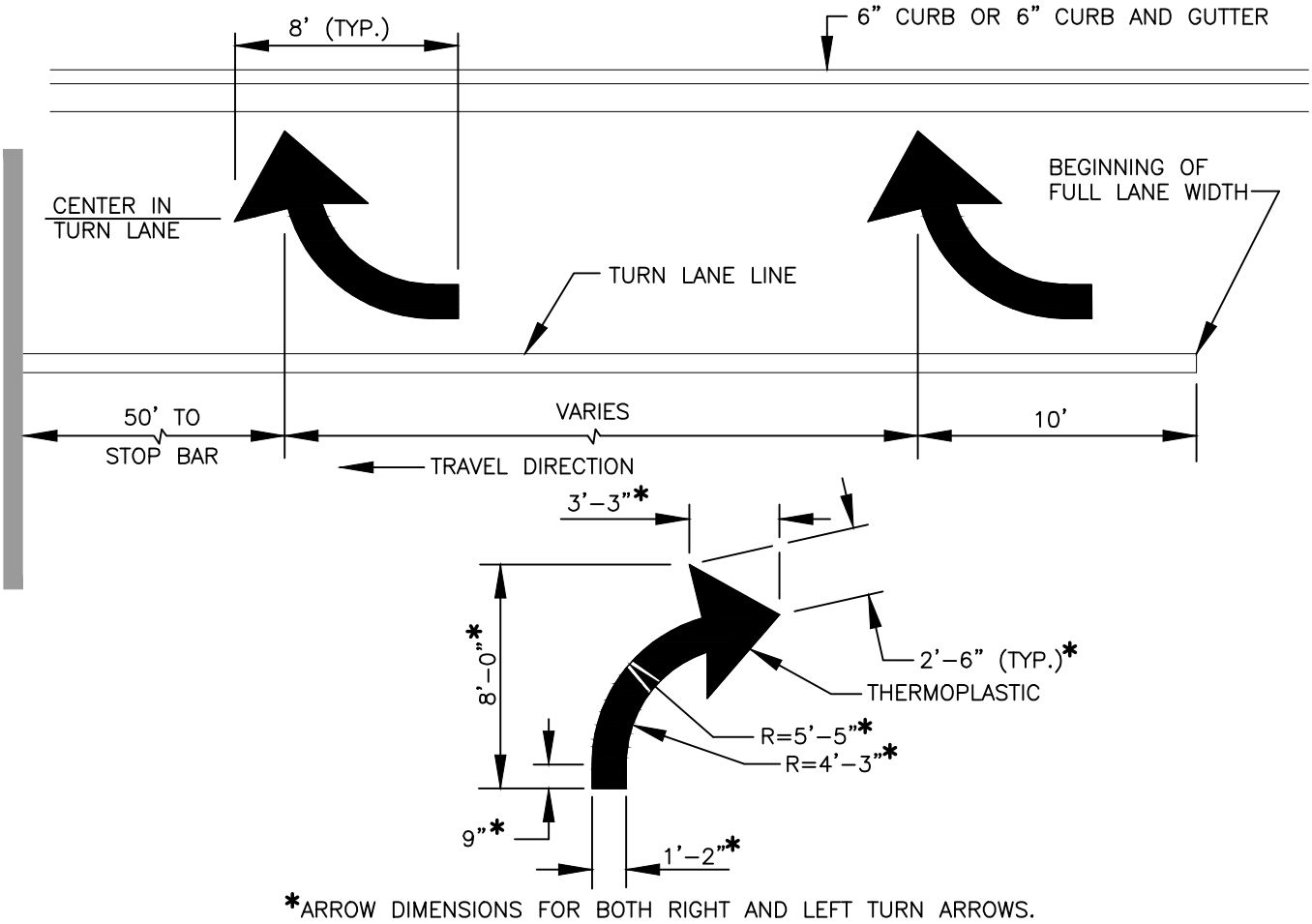

*ARROW DIMENSIONS FOR BOTH RIGHT AND LEFT TURN ARROWS.

RIGHT TURN LANE MARKINGS

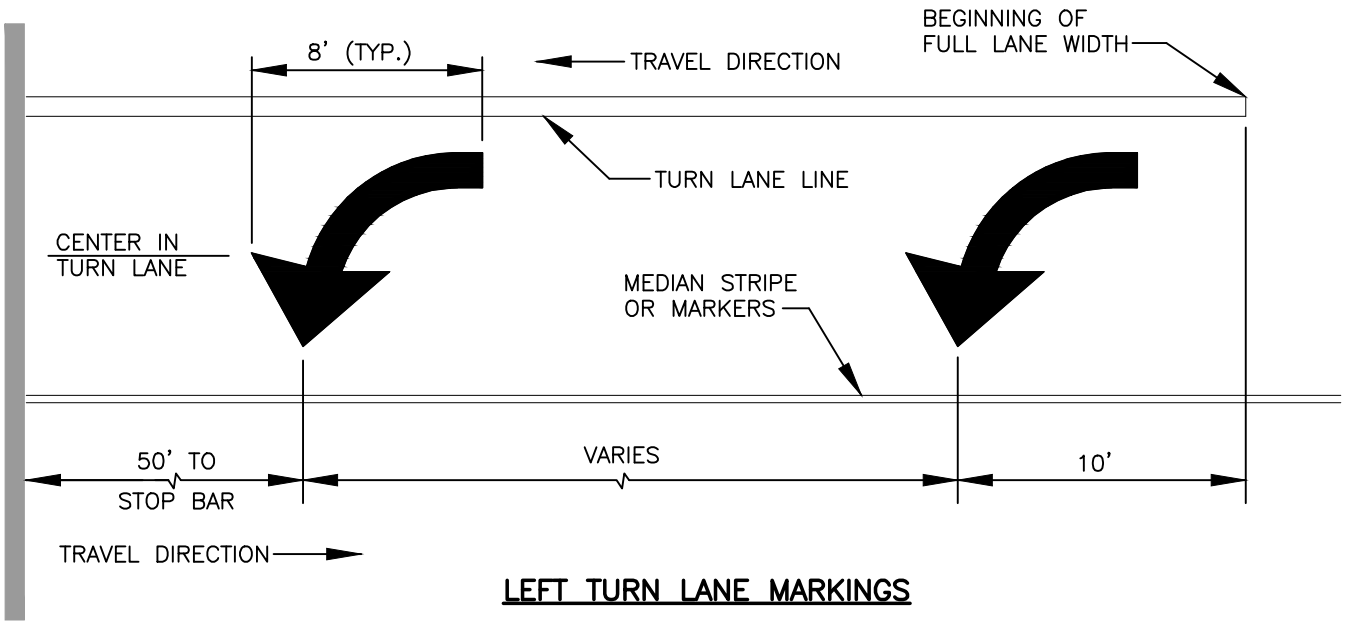

LEFT TURN LANE MARKINGS

REV NO.	DATE	BY	APPR
1	8/04	RAW	AGE
2	3/06	RAW	AGE
3	2/07	RAW	AGE
4	8/08	RAW	AGE
5	1/15	RAW	CJC
6	9/21	RAW	CJC

PUBLIC WORKS – STREETS AND TRANSPORTATION

APPROVED BY: TRAFFIC ENGINEER MANAGER

APPROVED DATE: 9/1/2021

CITY OF Vancouver WASHINGTON

RIGHT TURN AND LEFT TURN ARROW MARKINGS

STANDARD PLAN NUMBER

T29-53

I:\CITYAPPS\AUTOCAD\STD_DETAILS\DRAWING_FILES\T29-53

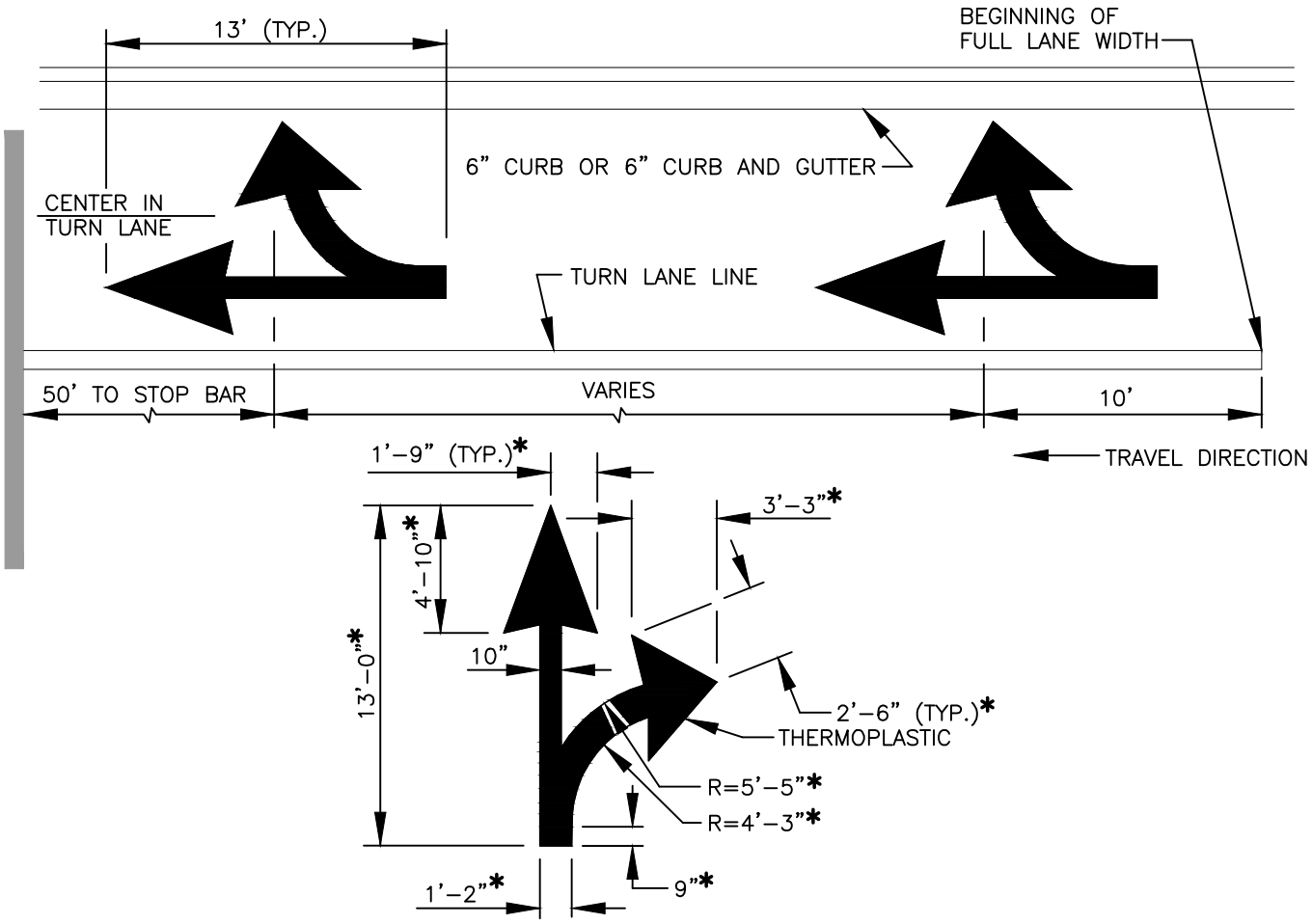

*ARROW DIMENSIONS FOR BOTH THRU-RIGHT AND THRU-LEFT TURN ARROWS.

THRU-RIGHT TURN LANE MARKINGS

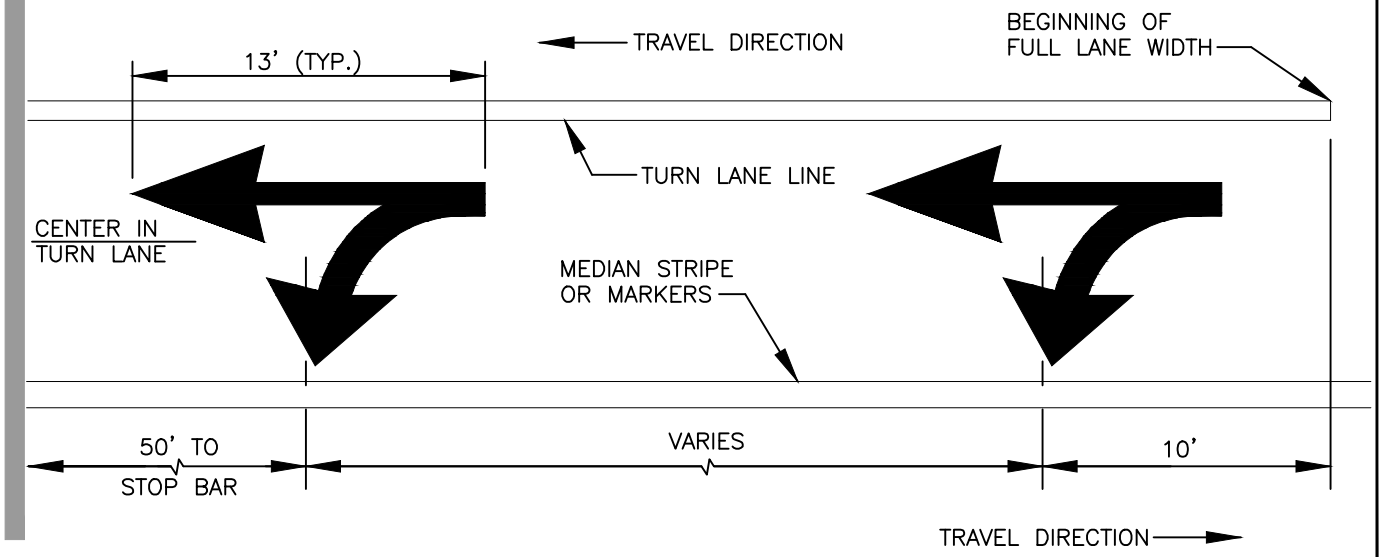

THRU-LEFT TURN LANE MARKINGS

REV NO.	DATE	BY	APPR
1	8/04	RAW	AGE
2	3/06	RAW	AGE
3	2/07	RAW	AGE
4	8/08	RAW	AGE
5	1/15	RAW	CJC
6	9/21	RAW	CJC

PUBLIC WORKS – STREETS AND TRANSPORTATION

APPROVED BY: TRAFFIC ENGINEER MANAGER

APPROVED DATE: 9/1/2021

CITY OF Vancouver WASHINGTON

THRU-RIGHT AND THRU-LEFT TURN ARROW MARKINGS

STANDARD PLAN NUMBER

T29-54

I:\CITYAPPS\AUTOCAD\STD_DETAILS\DRAWING_FILES\T29-54

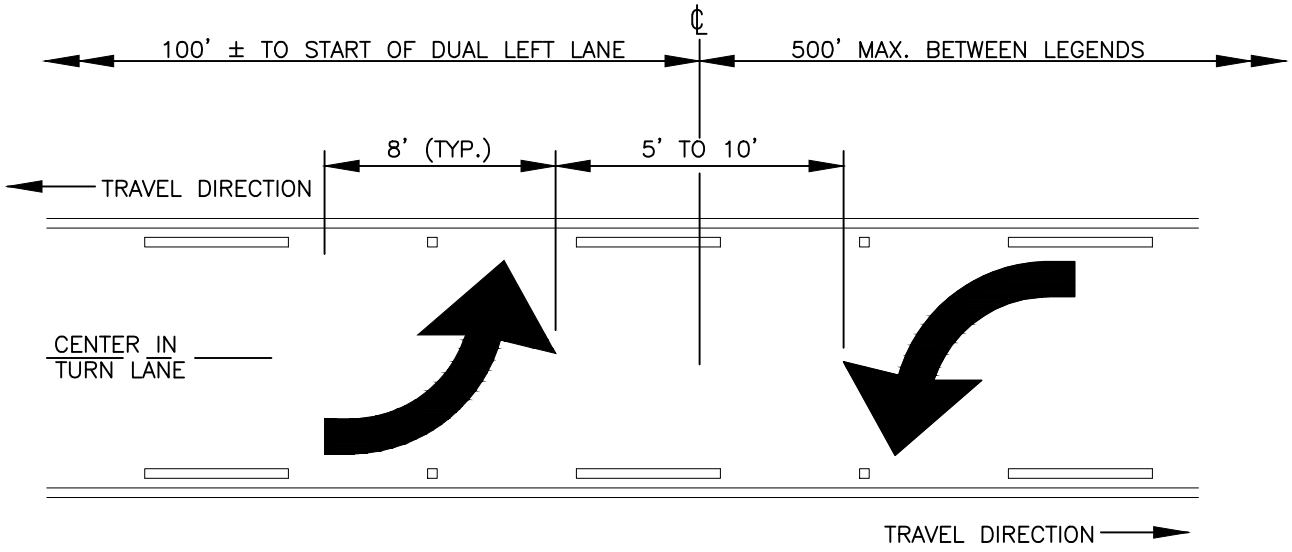

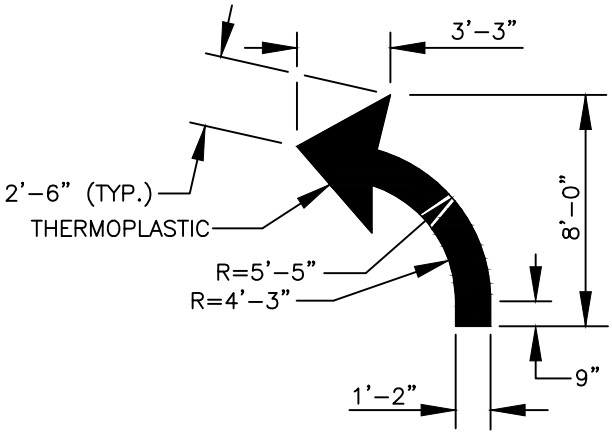

TWO-WAY LEFT TURN LANE LEGEND

REV NO.	DATE	BY	APPR
1	8/04	RAW	AGE
2	3/06	RAW	AGE
3	2/07	RAW	AGE
4	8/08	RAW	AGE
5	1/15	RAW	CJC
6	9/21	RAW	CJC

PUBLIC WORKS – STREETS AND TRANSPORTATION

APPROVED BY: TRAFFIC ENGINEER MANAGER

APPROVED DATE: 9/1/2021

CITY OF Vancouver WASHINGTON

TWO-WAY LEFT TURN ARROW MARKINGS

STANDARD PLAN NUMBER

T29-55

I:\CITYAPPS\AUTOCAD\STD_DETAILS\DRAWING_FILES\T29-55

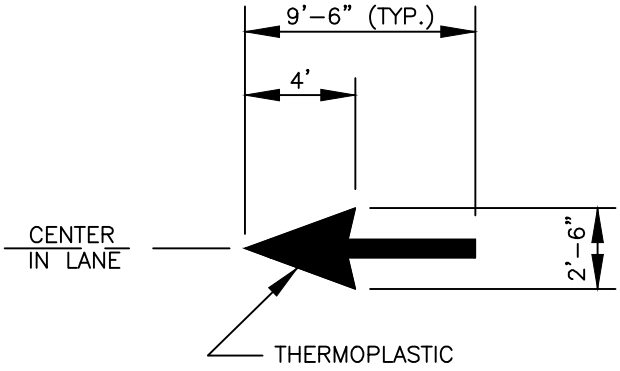

THRU ARROW LEGEND

REV NO.	DATE	BY	APPR
1	8/04	RAW	AGE
2	3/06	RAW	AGE
3	2/07	RAW	AGE
4	8/08	RAW	AGE
5	1/15	RAW	CJC
6	9/21	RAW	CJC

PUBLIC WORKS – STREETS AND TRANSPORTATION

APPROVED BY: TRAFFIC ENGINEER MANAGER

APPROVED DATE: 9/1/2021

CITY OF Vancouver WASHINGTON

THRU LANE ARROW MARKINGS

STANDARD PLAN NUMBER

T29-56

I:\CITYAPPS\AUTOCAD\STD_DETAILS\DRAWING_FILES\T29-56

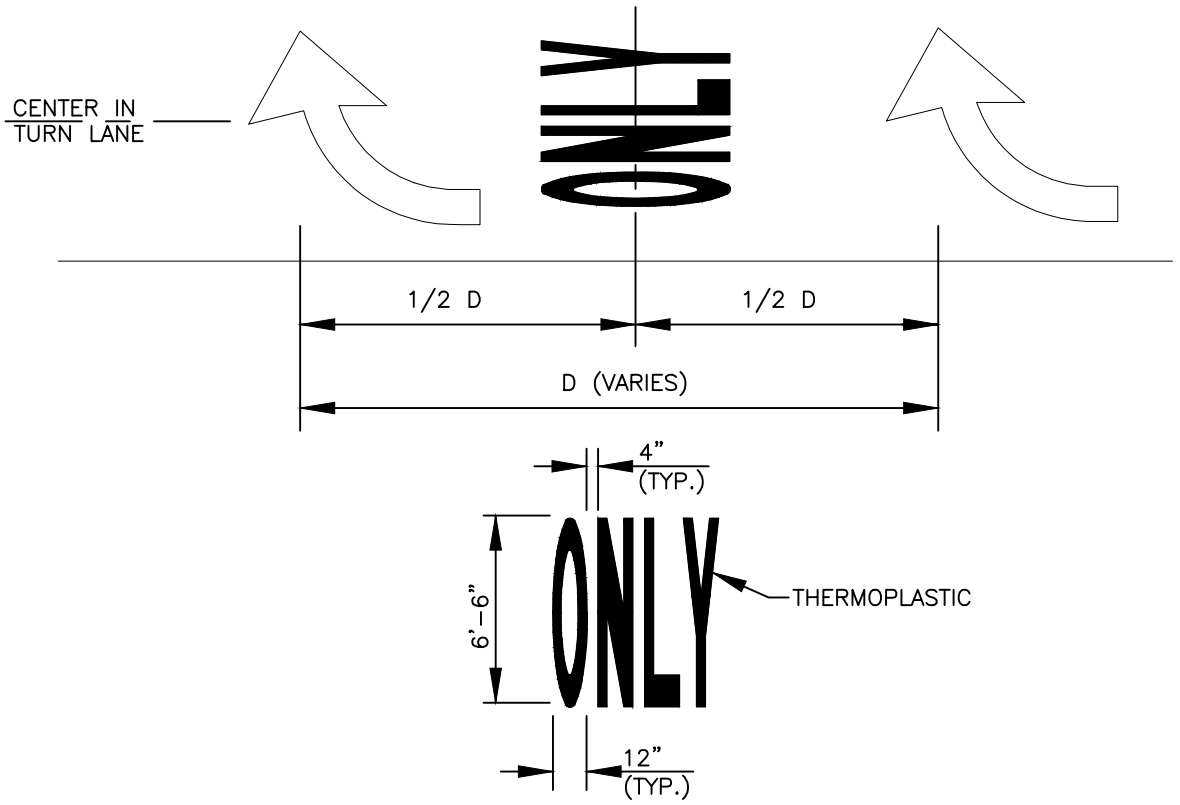

"ONLY" PAVEMENT LEGEND

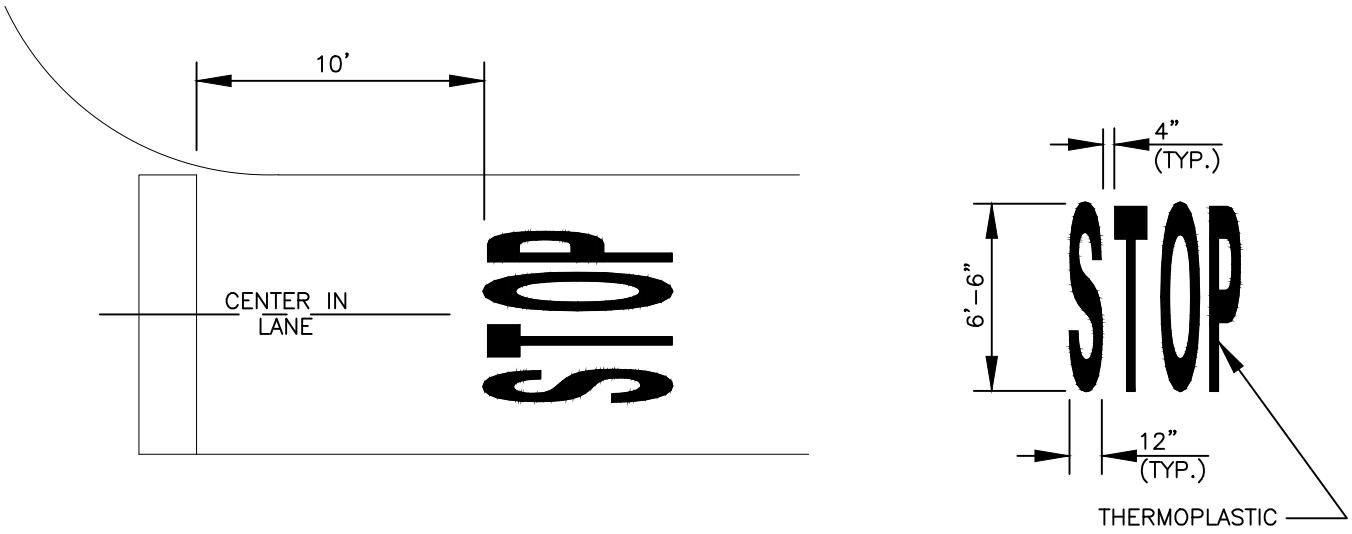

"STOP" PAVEMENT LEGEND

REV NO.	DATE	BY	APPR
1	8/04	RAW	AGE
2	3/06	RAW	AGE
3	2/07	RAW	AGE
4	8/08	RAW	AGE
5	1/15	RAW	CJC
6	9/21	RAW	CJC

PUBLIC WORKS – STREETS AND TRANSPORTATION

APPROVED BY: TRAFFIC ENGINEER MANAGER

APPROVED DATE: 9/1/2021

CITY OF Vancouver WASHINGTON

"ONLY" LEGEND AND "STOP" LEGEND MARKINGS

STANDARD PLAN NUMBER

T29-57

I:\CITYAPPS\AUTOCAD\STD_DETAILS\DRAWING_FILES\T29-57

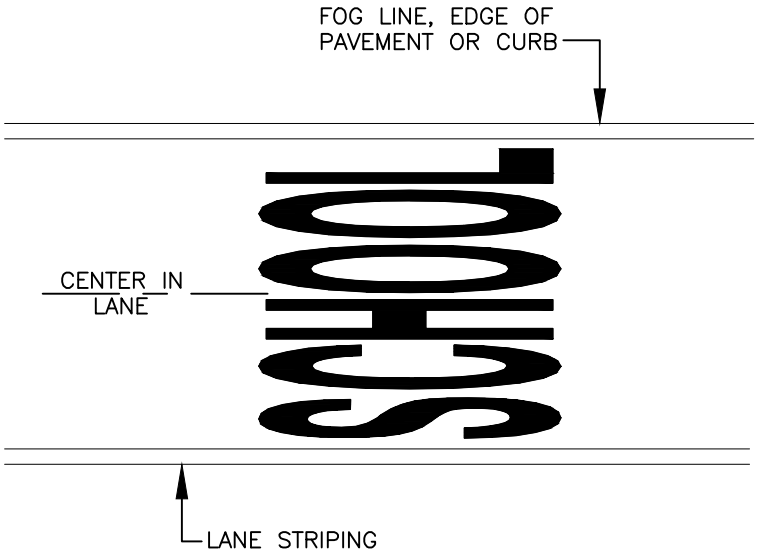

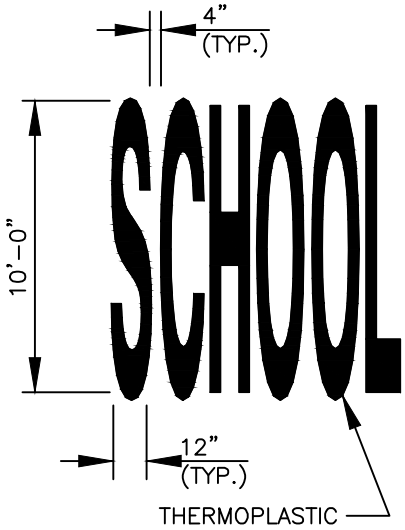

"SCHOOL" ZONE LEGEND

REV NO.	DATE	BY	APPR
1	8/04	RAW	AGE
2	3/06	RAW	AGE
3	2/07	RAW	AGE
4	8/08	RAW	AGE
5	1/15	RAW	CJC
6	9/21	RAW	CJC

PUBLIC WORKS – STREETS AND TRANSPORTATION

APPROVED BY: TRAFFIC ENGINEER MANAGER

APPROVED DATE: 9/1/2021

CITY OF Vancouver WASHINGTON

"SCHOOL"
LEGEND MARKINGS

STANDARD PLAN NUMBER

T29–58

I:\CITYAPPS\AUTOCAD\STD_DETAILS\DRAWING_FILES\T29-58

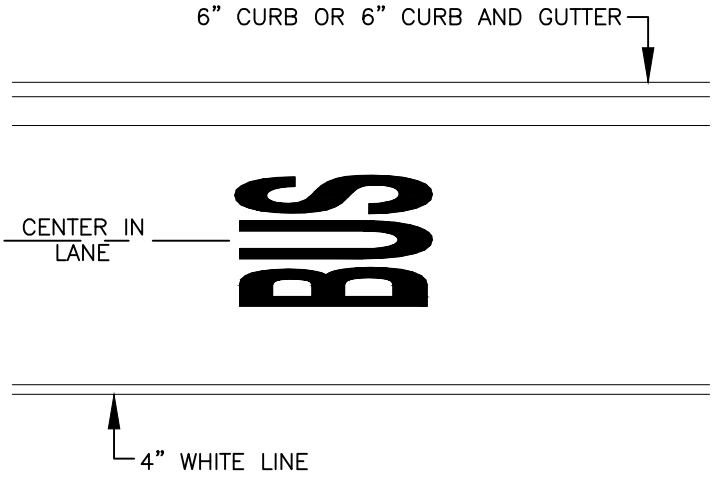

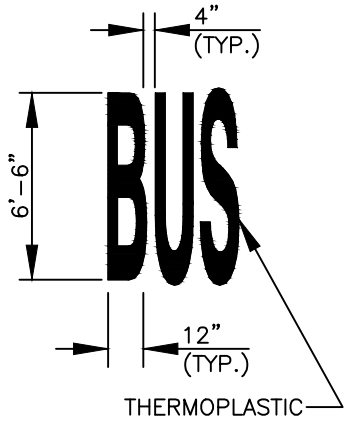

"BUS" PAVEMENT LEGEND

REV NO.	DATE	BY	APPR
1	8/04	RAW	AGE
2	3/06	RAW	AGE
3	2/07	RAW	AGE
4	8/08	RAW	AGE
5	1/15	RAW	CJC
6	9/21	RAW	CJC

PUBLIC WORKS – STREETS AND TRANSPORTATION

APPROVED BY: TRAFFIC ENGINEER MANAGER

APPROVED DATE: 9/1/2021

CITY OF Vancouver WASHINGTON

"BUS" LEGEND MARKINGS

STANDARD PLAN NUMBER

T29-59

I:\CITYAPPS\AUTOCAD\STD_DETAILS\DRAWING_FILES\T29-59

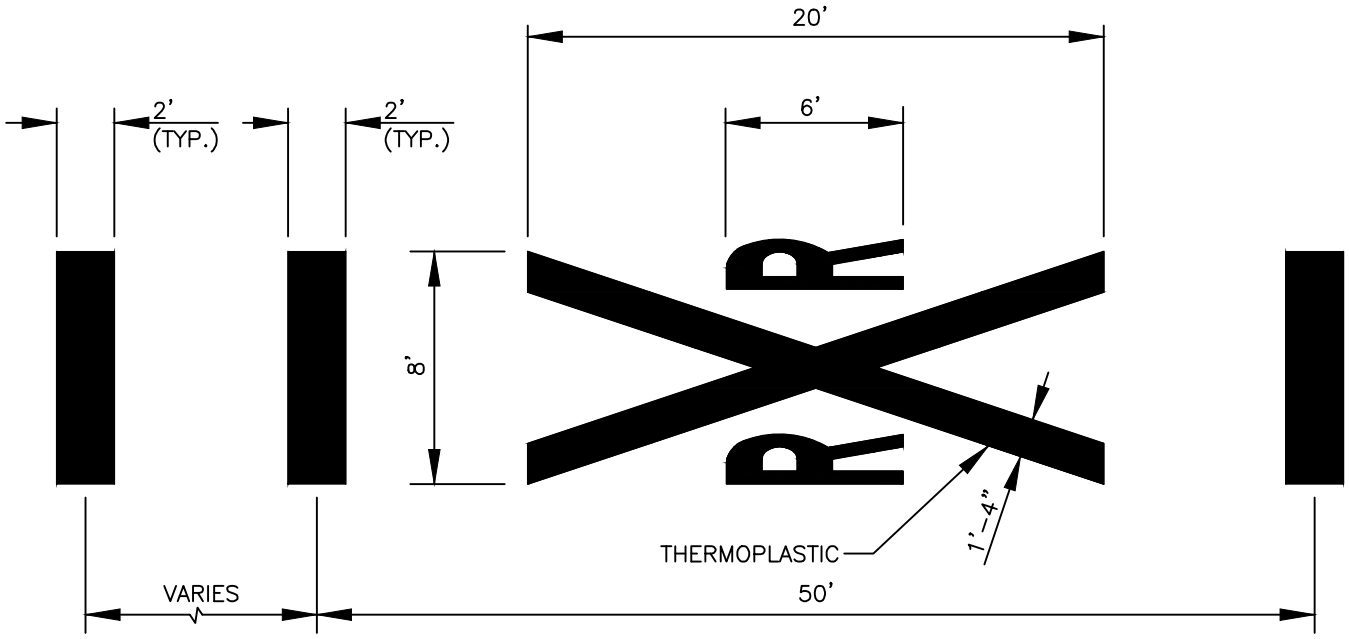

NOTES:

THE ENGINEER MUST OBTAIN AUTHORIZATION FOR THE PLACEMENT OF "RAILROAD CROSSING" MARKING PRIOR TO PLAN APPROVAL. AUTHORIZATION SHALL BE OBTAINED FROM THE WSDOT RAIL SAFETY SECTION.

RAILROAD CROSSING LEGEND

REV NO.	DATE	BY	APPR
1	8/04	RAW	AGE
2	3/06	RAW	AGE
3	2/07	RAW	AGE
4	8/08	RAW	AGE
5	1/15	RAW	CJC
6	9/21	RAW	CJC

PUBLIC WORKS – STREETS AND TRANSPORTATION

APPROVED BY: TRAFFIC ENGINEER MANAGER

APPROVED DATE: 9/1/2021

CITY OF Vancouver WASHINGTON

RAILROAD CROSSING LEGEND MARKINGS

STANDARD PLAN NUMBER

T29-60

I:\CITYAPPS\AUTOCAD\STD_DETAILS\DRAWING_FILES\T29-60

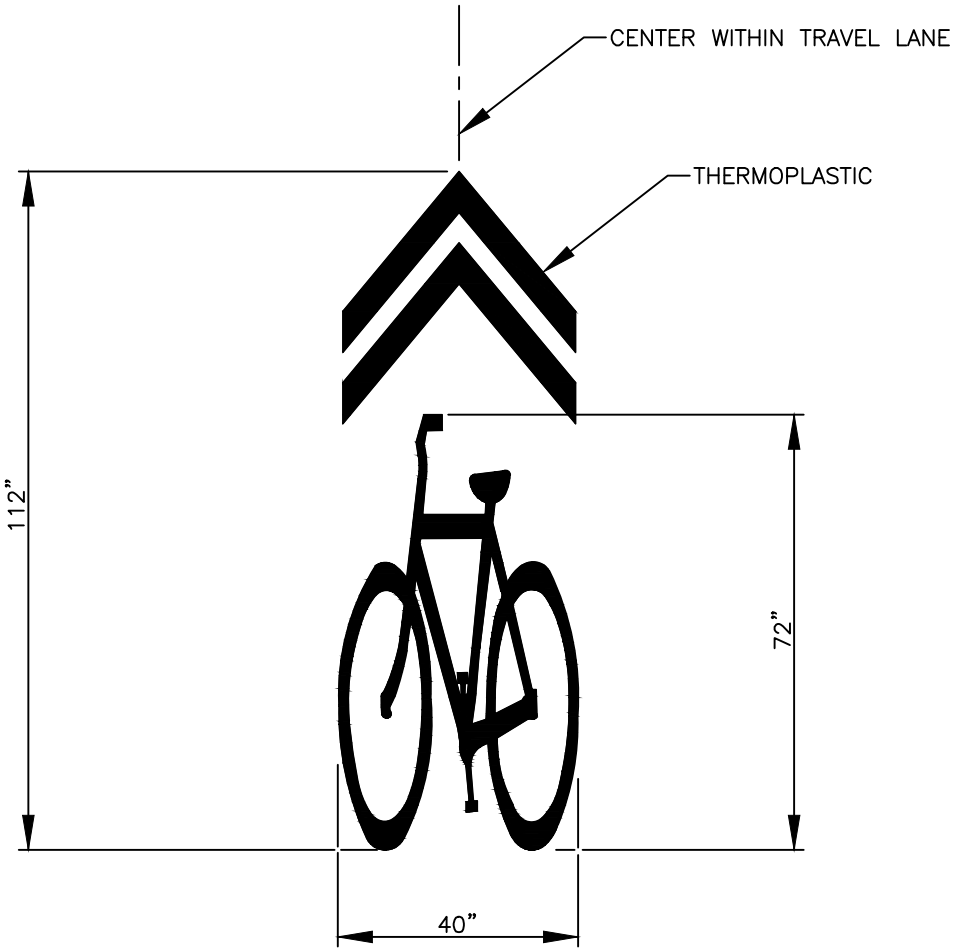

BICYCLE STENCIL FOR SHARED USE ROADWAYS

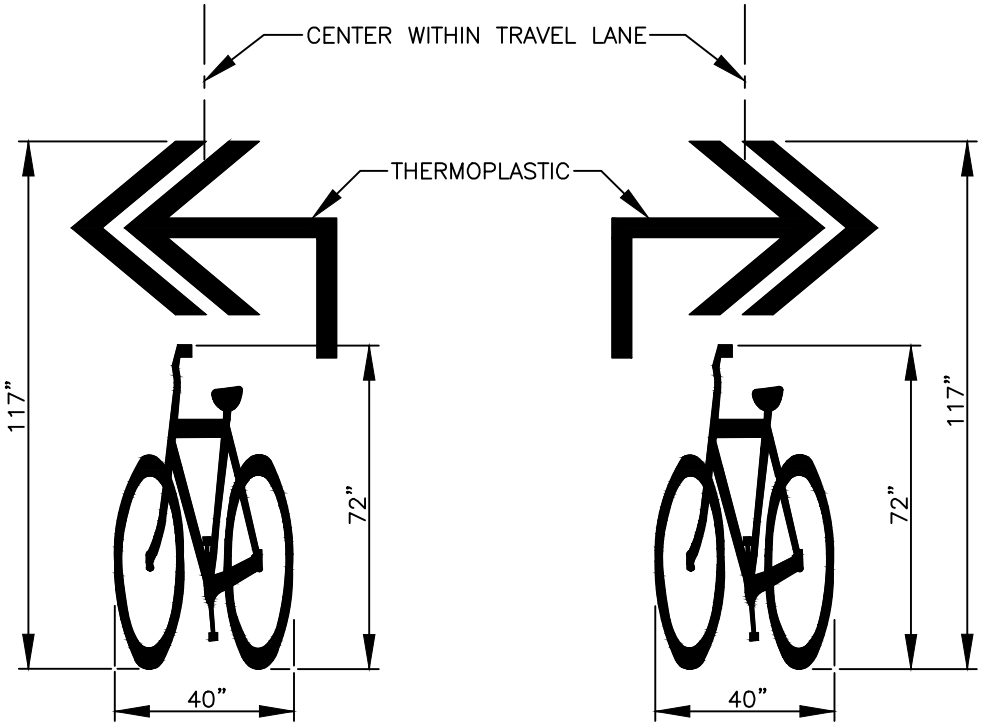

BICYCLE STENCIL FOR SHARED USE ROADWAYS (LEFT)

BICYCLE STENCIL FOR SHARED USE ROADWAYS (RIGHT)

REV NO.	DATE	BY	APPR
1	3/06	RAW	AGE
2	2/07	RAW	AGE
3	8/08	RAW	AGE
4	7/14	RAW	CJC
5	2/21	RAW	CJC
6	9/21	RAW	CJC

PUBLIC WORKS – STREETS AND TRANSPORTATION

APPROVED BY: TRAFFIC ENGINEER MANAGER

APPROVED DATE: 9/1/2021

CITY OF Vancouver WASHINGTON

BICYCLE STENCIL FOR SHARED USE ROADWAYS

STANDARD PLAN NUMBER

T29–61

I:\CITYAPPS\AUTOCAD\STD_DETAILS\DRAWING_FILES\T29-61

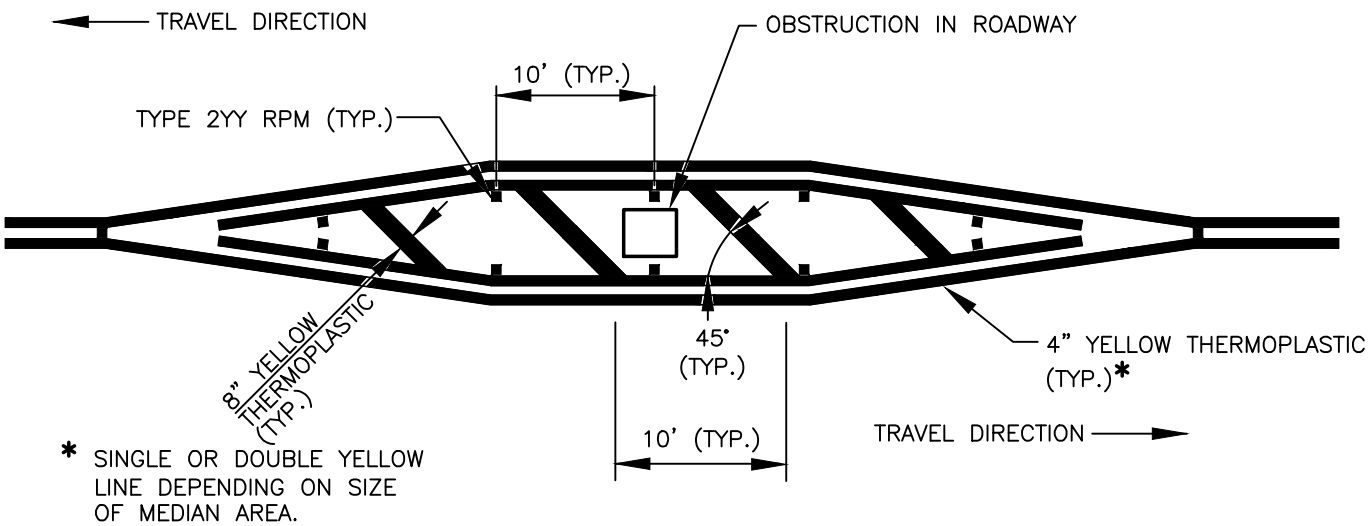

TRANSVERSE MEDIAN MARKING (BOTH DIRECTIONS)

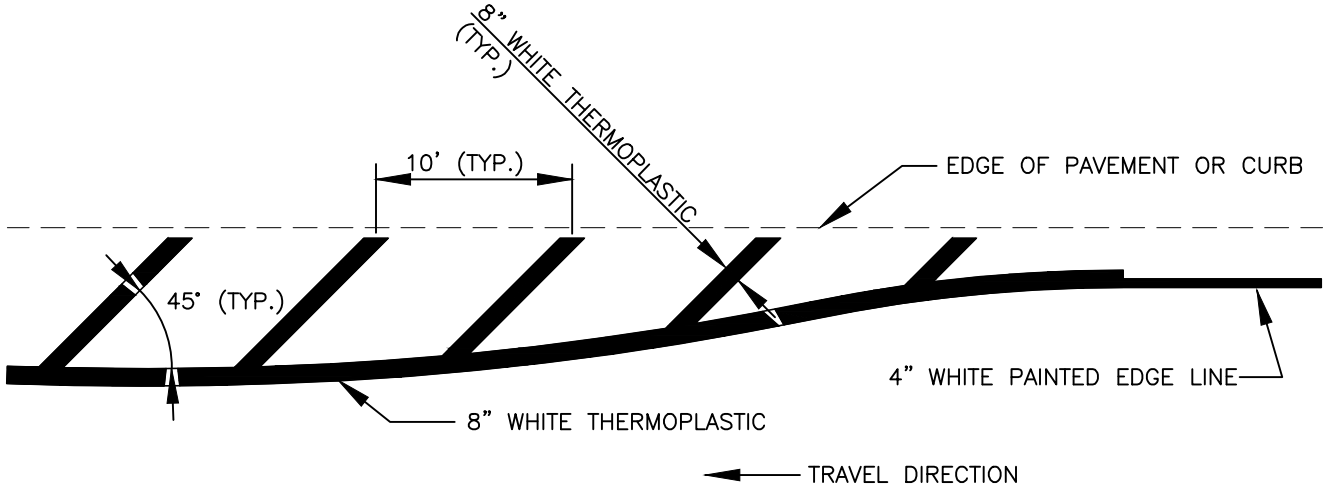

TRANSVERSE MARKING

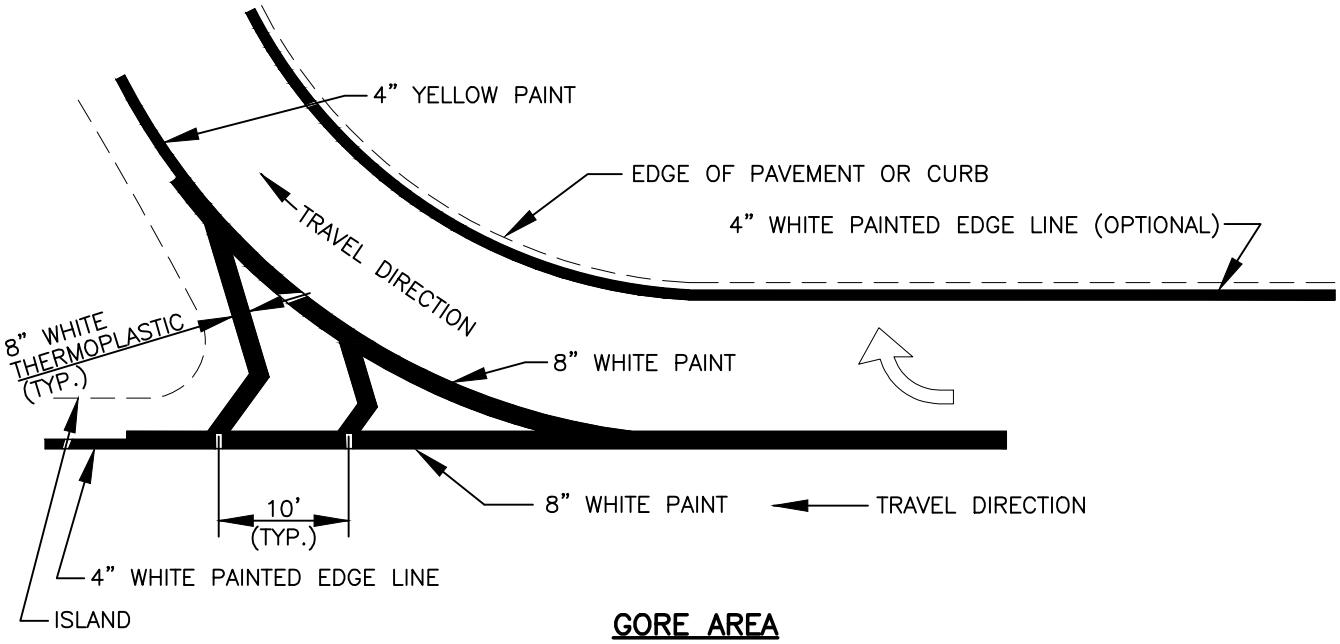

GORE AREA

REV NO.	DATE	BY	APPR
1	3/06	RAW	AGE
2	2/07	RAW	AGE
3	8/08	RAW	AGE
4	1/15	RAW	CJC
5	10/19	RAW	CJC
6	9/21	RAW	CJC

PUBLIC WORKS – STREETS AND TRANSPORTATION

APPROVED BY: TRAFFIC ENGINEER MANAGER

APPROVED DATE: 9/1/2021

CITY OF Vancouver WASHINGTON

TRANSVERSE MEDIAN MARKINGS

STANDARD PLAN NUMBER T29–62

I:\CITYAPPS\AUTOCAD\STD_DETAILS\DRAWING_FILES\T29-62

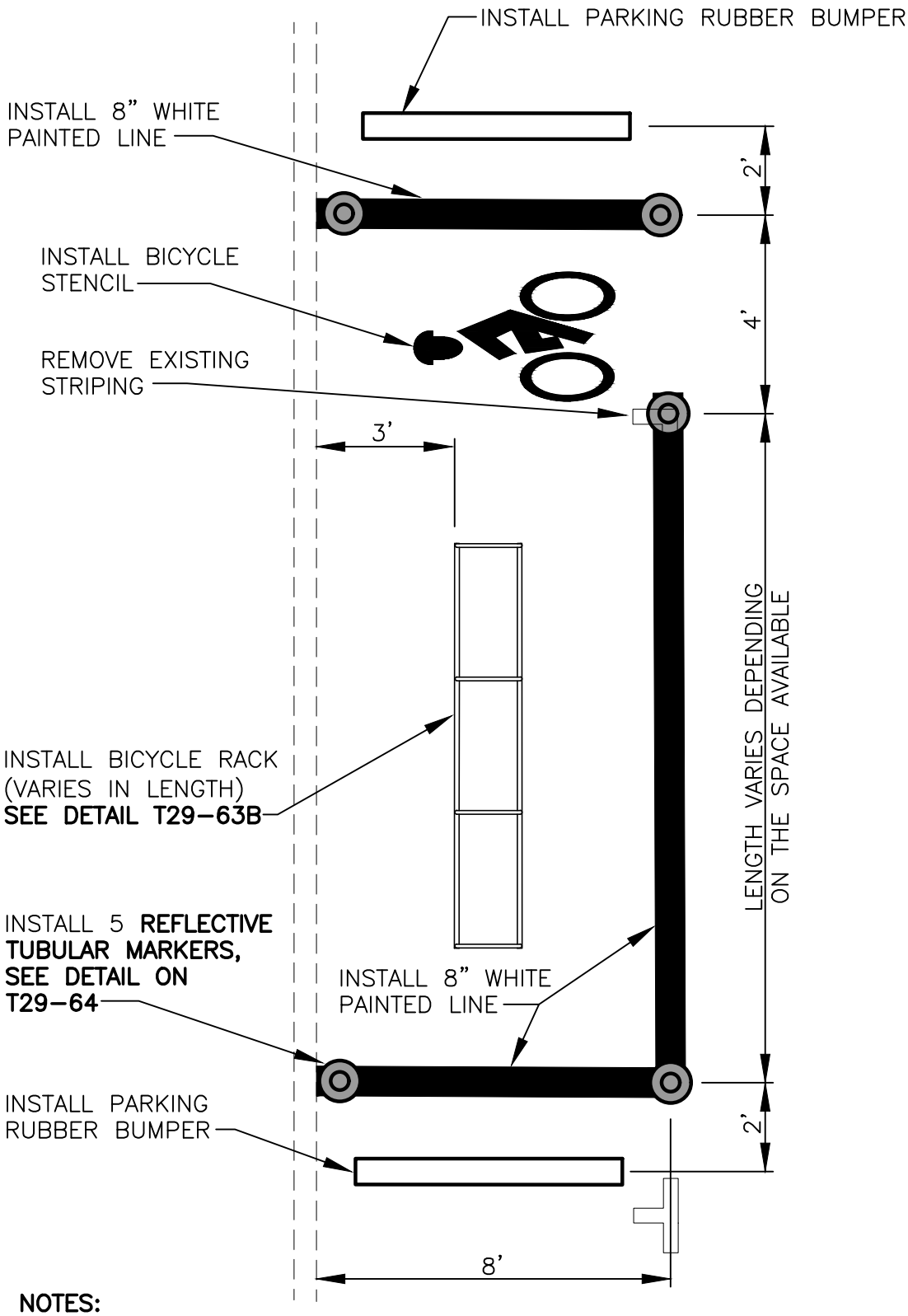

NOTES:

1. STENCIL TO BE INSTALLED AFTER BICYCLE RACKS ARE INSTALLED TO ENSURE APPROPRIATE PLACEMENT.

2. CONTACT ENGINEERING SERVICES, 24 HOURS PRIOR TO STRIPING LAYOUT.

REV NO.	DATE	BY	APPR
1	3/16	RAW	CJC
2	9/21	RAW	CJC

PUBLIC WORKS – STREETS AND TRANSPORTATION

APPROVED BY: TRAFFIC ENGINEER MANAGER

APPROVED DATE: 9/1/2021

CITY OF Vancouver WASHINGTON

BIKE CORRAL LAYOUT

STANDARD PLAN NUMBER

T29-63A

I:\CITYAPPS\AUTOCAD\STD_DETAILS\DRAWING_FILES\T29-63A

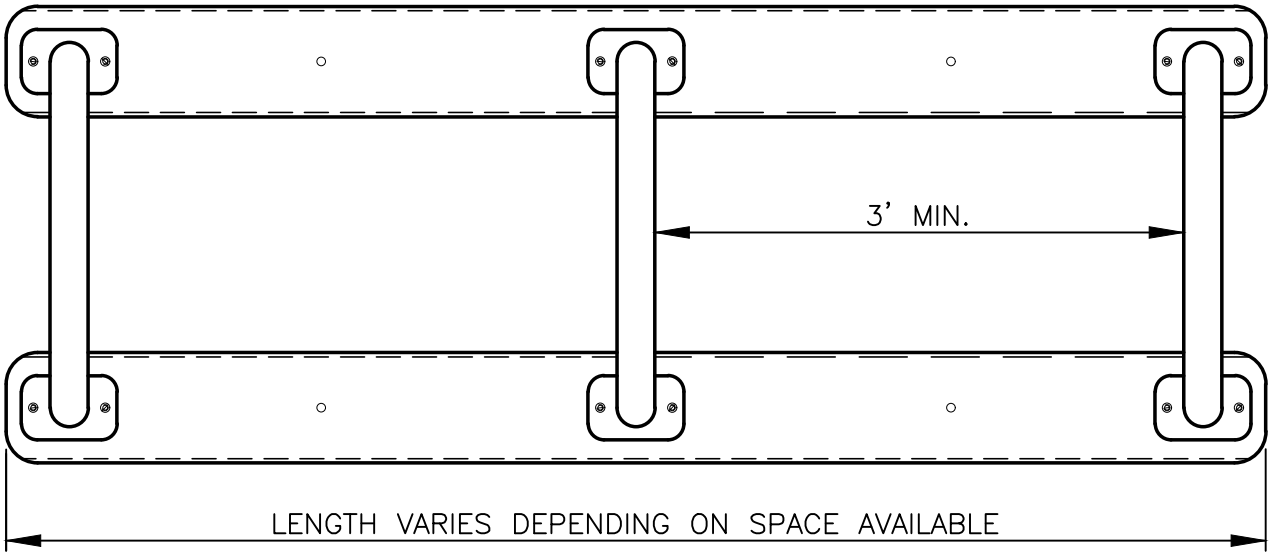

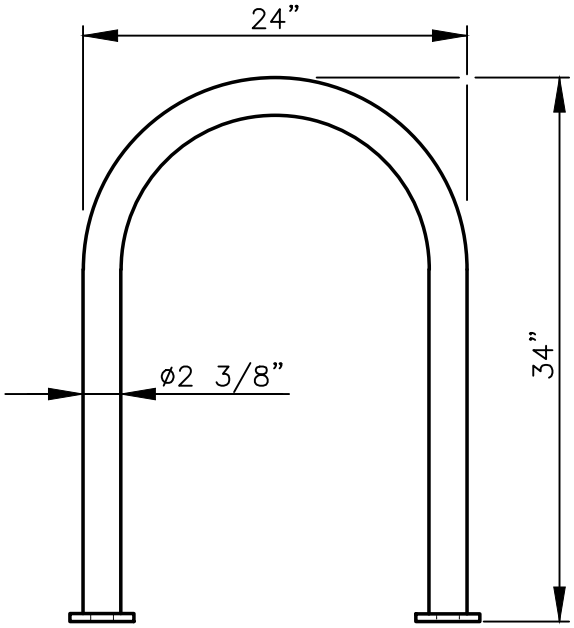

NOTES:

1. DESIGN MUST BE APPROVED BY CITY OF VANCOUVER PUBLIC WORKS.
2. INSTALLATION MUST BE COMPLETED IN ACCORDANCE WITH SPECIFICATIONS.

REV NO.	DATE	BY	APPR
1	3/16	RAW	CJC
2	9/21	RAW	CJC

PUBLIC WORKS – STREETS AND TRANSPORTATION

APPROVED BY: TRAFFIC ENGINEER MANAGER

APPROVED DATE: 9/1/2021

CITY OF Vancouver WASHINGTON

BIKE CORRAL
BICYCLE RACK

STANDARD PLAN NUMBER

T29–63B

I:\CITYAPPS\AUTOCAD\STD_DETAILS\DRAWING_FILES\T29-63B

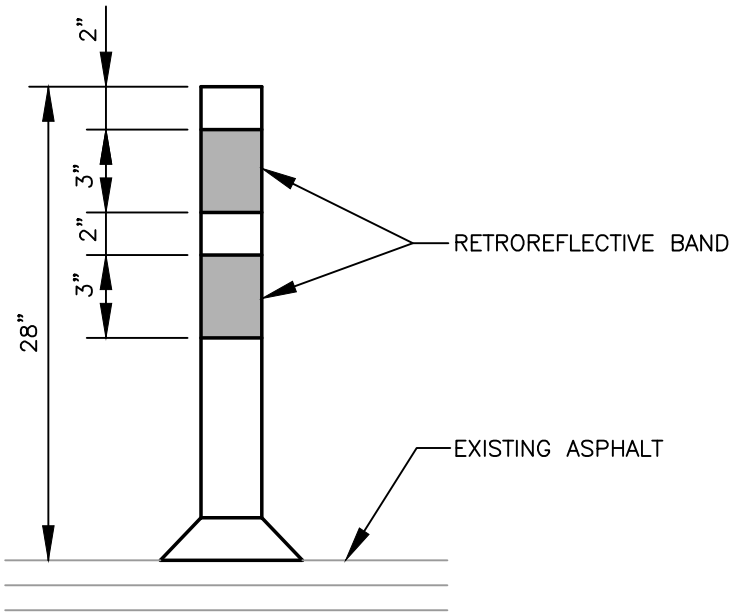

TUBULAR MARKER

NOTE:

1. SHALL BE BOLTED TO PAVEMENT PER MANUFACTURERS SPECIFICATIONS.

REV NO.	DATE	BY	APPR
1	3/16	RAW	CJC
2	9/21	RAW	CJC

PUBLIC WORKS – STREETS AND TRANSPORTATION

APPROVED BY: TRAFFIC ENGINEER MANAGER

APPROVED DATE: 9/1/2021

CITY OF Vancouver WASHINGTON

TUBULAR MARKING DETAIL

STANDARD PLAN NUMBER

T29–64

I:\CITYAPPS\AUTOCAD\STD_DETAILS\DRAWING_FILES\T29-64