CITY OF VANCOUVER STREET LIGHT REQUIREMENTS **LUMINANCE METHOD (Straight Sections)**	Roadway Classification																Lighting District					
	Principal Arterial				Minor Arterial			Collector Arterial			Industrial			Local Access			Downtown	Uptown	Promenade Roadway	Promenade Pathway	Historical District/Officer's Row Roadway	Historical District/Officer's Row Pathway
	Expressway	Major									Primary	Primary	Secondary									
Pedestrian Conflict (10)	All	High	Medium	Low	High	Medium	Low	High	Medium	Low	High	High	Medium	Medium	Low	Low	All	All	All	All	All	All
Applicable Street Sections Standard Plans	N/A	T10-04 T10-05	T10-06	T10-07	T10-08	T10-09 T10-10	T10-11	T10-12	T10-13	T10-14	T10-20	T10-21	T10-22 T10-23	T10-15A	T10-15B	As Directed	As Directed	As Directed	As Directed	As Directed	As Directed	As Directed
Averaged Maintained Luminance (2) (3)	1.0	1.2	0.9	0.6	1.0	0.8	0.6	0.8	0.6	0.4	1.2	1.2	1.0	0.5	0.3	0.3	1.2	1.2	1.0	0.9	1.0	0.9
Luminance Unformity (4) — Average to Minimum	3:1	3:1	3:1	3:1	3:1	3:1	3:1	3:1	3:1	4:1	3:1	3:1	3:1	6:1	6:1	6:1	3:1	3:1	3:1	4:1	3:1	4:1
Luminance Unformity (4) — Maximum to Minimum	5:1	5:1	5:1	6:1	5:1	5:1	6:1	5:1	6:1	8:1	5:1	5:1	5:1	10:1	10:1	10:1	5:1	5:1	5:1	8:1	5:1	8:1
Max. Veiling Luminance Ratio — LVmax to Laverage	0.3	0.3	0.3	0.3	0.3	0.3	0.3	0.4	0.4	0.4	0.3	0.3	0.3	0.4	0.4	0.4	3:1	3:1	3:1	4:1	3:1	4:1
Maximum Pole Spacing (5) (6)	N/A	170	160	185	165	175	180	160	180	160	170	180	180	160	275	130	90	90	100	120	90	120
Light Standard Types Approved for Use (7)	Design Required	A	A	A	A	A	A	A	A	A	A	A	A	A	A	D**	D	D	P	R	O	O
Luminaire	SEE CITY'S APPROVED PRODUCTS LIST																					
Fixtures Mounting Height (nominal in feet) (8)	Design Required	30	30	30	30	30	30	30	30	30	30	30	30	25	25	20	21	20	20	14	20	14
One Side or Both Sides Lighting Applicable (9)	Both Sides	Both Sides	Both Sides	Both Sides	Both Sides	Both Sides	Both Sides	Both Sides *	Both Sides *	Both Sides *	Both Sides *	Both Sides* *	Both Sides *	Both Sides *	Both Sides *	Both Sides *	Both Sides	Both Sides	One Side Both Sides	One Side	One Side Both Sides	One Side
Light Source (7)	As Directed	LED	LED	LED	LED	LED	LED	LED	LED	LED	LED	LED	LED	LED	LED	As Directed	As Directed	As Directed	As Directed	As Directed	As Directed	As Directed

NOTES:

* Both Sides Staggered Preferred Unless Only Half Street is Improved.

** Use type D lighting standard in all residential areas unless the surrounding neighborhood is either type A or type N or as directed by engineer.

See Standard Plan T21-01D for note (#) information.

CITY OF Vancouver WASHINGTON

STREET LIGHTING REQUIREMENTS
LUMINANCE METHOD STRAIGHT SECTIONS

CITY OF VANCOUVER
DEPARTMENT OF PUBLIC WORKS
TRANSPORTATION DIVISION

DRAWN BY	APPROVED BY	APPROVAL DATE
CDC		1/15
REVISION	APPROVED BY	APPROVAL DATE
4		3/24

STD. PLAN NO.
T21-01A

CITY OF VANCOUVER STREET LIGHT REQUIREMENTS **ILLUMINANCE METHOD (Curved Sections)**	Roadway Classification																Lighting District					
	Principal Arterial				Minor Arterial			Collector Arterial			Industrial			Local Access			Downtown	Uptown	Promenade Roadway	Promenade Pathway	Historical District/Officer's Row Roadway	Historical District/Officer's Row Pathway
	Expressway	Major									Primary	Primary	Secondary									
Pedestrian Conflict (10)	All	High	Medium	Low	High	Medium	Low	High	Medium	Low	High	High	Medium	Medium	Low	Low	All	All	All	All	All	All
Applicable Street Sections Standard Plans	N/A	T10-04 T10-05	T10-06	T10-07	T10-08	T10-09 T10-10	T10-11	T10-12	T10-13	T10-14	T10-20	T10-21	T10-22 T10-23	T10-15A	T10-15B	As Directed	As Directed	As Directed	As Directed	As Directed	As Directed	As Directed
Averaged Maintained Illuminance (2) (3)	1.5	1.8	1.3	0.9	1.5	1.2	0.9	1.2	0.9	0.6	1.8	1.8	1.5	0.7	0.4	0.4	1.8	1.8	1.5	1.3	1.5	1.3
Illuminance Unformity (4) Average to Minimum	3:1	3:1	3:1	3:1	3:1	3:1	3:1	4:1	4:1	4:1	3:1	3:1	3:1	6:1	6:1	6:1	3:1	3:1	3:1	4:1	3:1	4:1
Light Standard Types Approved for Use (7)	Design Required	A	A	A	A	A	A	A	A	A	A	A	A	A	A	D**	D	D	P	R	O	O
Fixtures Mounting Height (nominal in feet) (8)	Design Required	30	30	30	30	30	30	30	30	30	30	30	30	25	25	20	20	20	20	14	20	14
One Side or Both Sides Lighting Applicable (9)	Both Sides	Both Sides	Both Sides	Both Sides	Both Sides	Both Sides	Both Sides	Both Sides *	Both Sides *	Both Sides *	Both Sides *	Both Sides *	Both Sides *	Both Sides *	Both Sides *	Both Sides *	Both Sides	Both Sides	One Side Both Sides	One Side	One Side Both Sides	One Side
Luminaire	SEE CITY'S APPROVED PRODUCTS LIST																					
Light Source (7)	As Directed	LED	LED	LED	LED	LED	LED	LED	LED	LED	LED	LED	LED	LED	LED	As Directed	As Directed	As Directed	As Directed	As Directed	As Directed	As Directed

NOTES:

* Both Sides Staggered Preferred Unless Only Half Street is Improved.

** Use type D lighting standard in all residential areas unless the surrounding neighborhood is either type A or type N or as directed by engineer.

See Standard Plan T21-01D for note (#) information.

CITY OF Vancouver WASHINGTON

STREET LIGHTING REQUIREMENTS
ILLUMINANCE METHOD CURVED SECTIONS

CITY OF VANCOUVER
DEPARTMENT OF PUBLIC WORKS
TRANSPORTATION DIVISION

DRAWN BY	APPROVED BY	APPROVAL DATE
CDC		1/15
REVISION	APPROVED BY	APPROVAL DATE
4		3/24

STD. PLAN NO.
T21-01B

CITY OF VANCOUVER STREET LIGHTING REQUIREMENTS ILLUMINANCE METHOD	Illumination for Intersections			
	Average Maintained Illuminance at Pavement by Pedestrian Area Classification in fc			Illuminance Uniformity (4)
Functional Classification	High Pedestrian Conflict	Medium Pedestrian Conflict	Low Pedestrian Conflict	Average to Minimum
Major Arterial/Major Arterial	3.4	2.6	1.8	3.0
Major Arterial/Minor Arterial	2.2	1.7	1.2	3.0
Major Arterial/Collector	2.9	2.2	1.5	3.0
Major Arterial/Industrial	2.4	1.9	0.9	3.0
Major Arterial/Local Access	2.6	2.0	1.3	3.0
Minor Arterial/Minor Arterial	2.0	1.6	1.2	3.0
Minor Arterial/Collector	1.8	1.4	1.0	3.0
Minor Arterial/Industrial	2.2	1.8	0.9	3.0
Minor Arterial/Local Access	1.5	1.1	0.9	3.0
Collector/Collector	2.4	1.8	1.2	4.0
Collector/Industrial	2.0	1.6	0.6	3.0
Collector/Local Access	2.1	1.6	1.0	4.0
Industrial/Industrial	2.4	2.0	–	3.0
Industrial/Local Access	1.8	1.5	0.5	4.0
Local Access/Local Access	1.8	1.4	0.8	6.0
Midblock Pedestrian Crossing	4.0	3.0	2.0	3.0

NOTES:

See standard plan T21–01D for note (#) information.

fc = foot candles

CITY OF Vancouver WASHINGTON

STREET LIGHTING REQUIREMENTS INTERSECTION ILLUMINANCE

CITY OF VANCOUVER
DEPARTMENT OF PUBLIC WORKS
TRANSPORTATION DIVISION

DRAWN BY	APPROVED BY	APPROVAL DATE
CDC		1/15
REVISION	APPROVED BY	APPROVAL DATE
3		3/24

STD. PLAN NO.
T21-01C

I:\CITYAPPS\AUTOCAD\STD_DETAILS\DRAWING_FILES\T21-01C.DWG

NOTES:

ALL INFORMATION IN THESE TABLES ARE INTENDED TO PRODUCE A LIGHTING DESIGN WITH LUMINANCE LEVELS AND UNIFORMITY FOR STRAIGHT AND CURVED ROADWAYS, AND ILLUMINANCE LEVELS AND UNIFORMITY FOR INTERSECTIONS. LIGHT LEVELS AND UNIFORMITY VALUES MEET OR EXCEED THOSE IN THE I.E.S., LIGHTING HANDBOOK, RP–8–21. INSTALLATION OF ADDITIONAL LIGHTS MAY BE NECESSARY TO MEET THE INTENT OF THIS STANDARD.

1. AVERAGE MAINTAINED LUMINANCE IS MEASURED IN CANDELA PER SQUARE METER. AVERAGE MAINTAINED ILLUMINANCE IS MEASURED IN FOOTCANDLES.

2. AT SIGNALIZED INTERSECTIONS, THE AVERAGE MAINTAINED ILLUMINANCE SHALL BE AS NOTED IN THE ILLUMINATION FOR INTERSECTIONS TABLE ON STANDARD PLAN T21–01C. FOR INTERSECTIONS WITH ONLY ONE ROADWAY LIT, THE AVERAGE MAINTAINED ILLUMINANCE SHALL BE 1.5 TIMES THE HIGHEST LIT APPROACH.

3. LUMINANCE UNIFORMITY: AVERAGE UNIFORMITY RATIO IS THE RATIO OF THE AVERAGE TO MINIMUM LUMINANCE. MAXIMUM UNIFORMITY IS THE RATIO OF THE MAXIMUM TO MINIMUM LUMINANCE. VALUES OUTSIDE THE ROADWAY SHALL NOT BE INCLUDED IN THE RATIO.

4. THE LATERAL LOCATION OF THE LIGHT STANDARD FOUNDATION SHALL BE A MINIMUM OF 2 FT. FROM THE FACE OF CURB TO THE FACE OF THE LIGHT POLE. SEE THE LIGHTING STANDARD PLANS FOR ADDITIONAL INFORMATION. THE LATERAL LOCATION OF THE CONDUIT AND JUNCTION BOXES SHALL BE ADJACENT TO THE BACK OF CURB, EXCEPT WHEN AN ALTERNATE LOCATION BETWEEN THE CURB AND SIDEWALK IS SHOWN ON THE PLANS. WHERE A PLANTING STRIP IS NOT PROVIDED AND THE SIDEWALK IS ADJACENT TO THE BACK OF CURB, THE LIGHT STANDARD SHALL NOT BE LOCATED MORE THAN 8 FT. FROM THE BACK OF CURB. WHERE THE SIDEWALK IS ATTACHED TO THE BACK OF CURB, THE CONDUITS AND JUNCTION BOXES SHALL BE LOCATED BEHIND THE SIDEWALK, BUT NOT MORE THAN 8 FT. FROM THE BACK OF CURB.

5. LIGHTING PLANS WILL REQUIRE APPROVAL AND POSSIBLE ADJUSTMENT TO MEET THE COV LIGHTING OBJECTIVES AND I.E.S. STANDARDS.

6. LIGHTING STANDARDS TYPE D, TYPE O, TYPE P, AND TYPE R SHALL ONLY BE USED IN THE DESIGNATED LIGHTING DISTRICTS. LIGHT STANDARDS LISTED ARE DEFINED IN MORE DETAIL IN THE "STANDARDS AND SPECIFICATIONS FOR TRAFFIC CONTROL DEVICES AND LIGHTING" DOCUMENT AND THE CITY'S APPROVED PRODUCTS LIST. STANDARD DETAILS FOR THE LIGHT STANDARDS ARE AVAILABLE.

7. ALL LIGHTING FIXTURES SHALL BE LIGHT EMITTING DIODE (LED) UNLESS OTHERWISE DIRECTED BY THE CITY. POST TOP FIXTURES IN RESIDENTIAL LAND USE AREAS SHALL BE I.E.S. TYPE V DISTRIBUTION. SEE THE "STANDARDS AND SPECIFICATIONS FOR TRAFFIC.

8. THE MOUNTING HEIGHT OF THE FIXTURE IS MEASURED FROM THE ROADWAY SURFACE TO THE CENTER OF THE LIGHT SOURCE. 6 FT. ARMS ARE USED IN ROADWAYS WITH PLANTER STRIPS, 10 FT. ARMS IN AREAS WITH CURB TIGHT SIDEWALK, OR AS DIRECTED BY THE CITY'S TRAFFIC ENGINEER.

9. ALTERNATIVE LIGHTING LAYOUTS MAY BE SUBMITTED FOR REVIEW. WHERE LIGHTING IS REQUIRED ON BOTH SIDES, DESIGNS SHALL BE "OPPOSITE LIGHTING" ON MAJOR ROADWAYS GREATER THAN 48 FEET IN WIDTH. THE USE OF STAGGERED LIGHTING SHALL ONLY BE USED WHERE "OPPOSITE LIGHTING" IS NOT PRACTICAL. LIGHTING LAYOUTS ON LOCAL RESIDENTIAL STREETS WITHIN A SUBDIVISION MAY VARY FROM SIDE TO SIDE.

10. LOW, MEDIUM, AND HIGH PEDESTRIAN CONFLICT AREAS ARE AS DEFINED IN THE ANSI/IES RP–8–21. THE PEDESTRIAN CONFLICT DESIGNATION FOR AN AREA USED FOR A LIGHTING SYSTEM DESIGN, SHALL BE PER THE CITY'S TRAFFIC ENGINEER'S DETERMINATION.

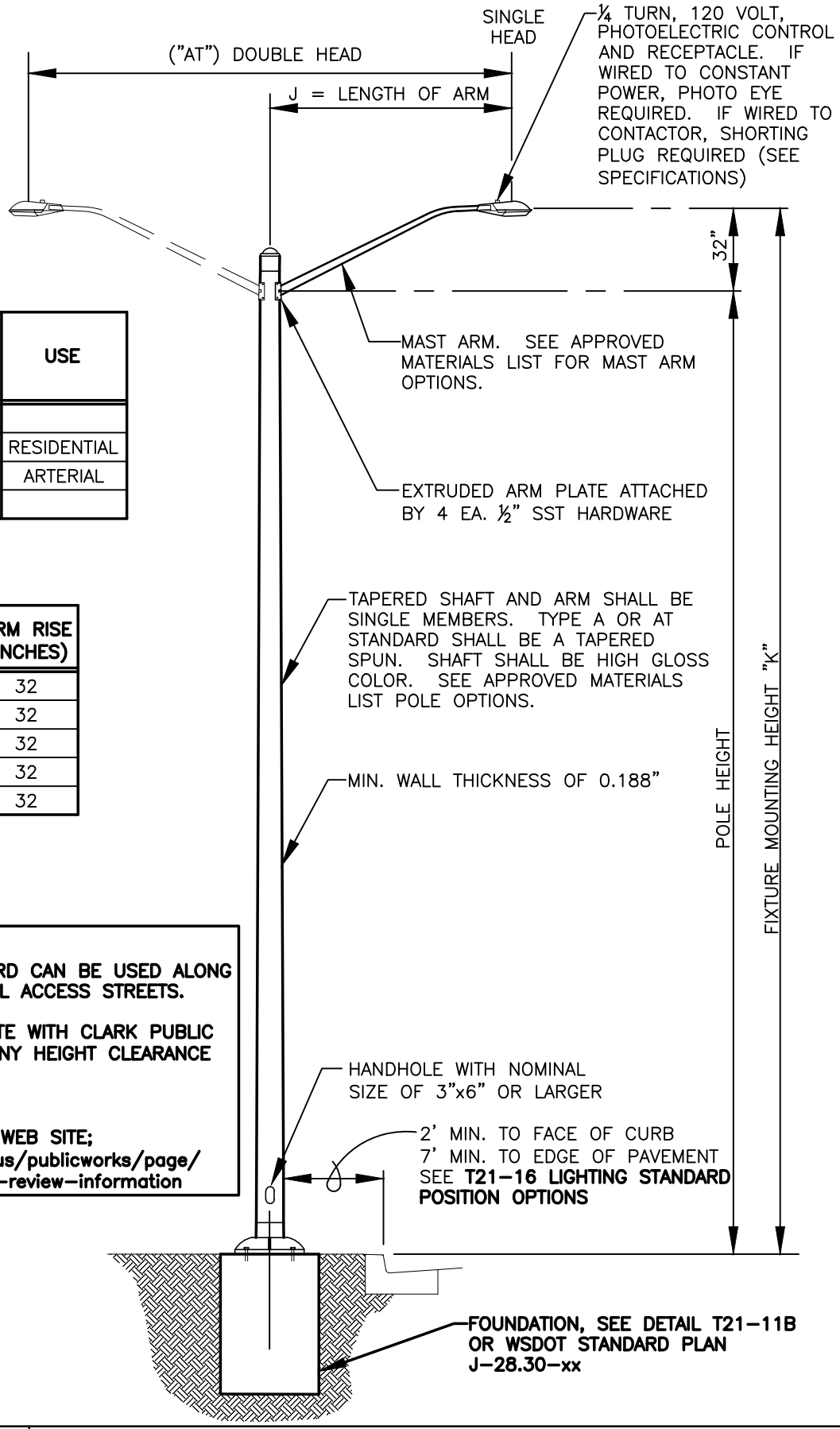

FIXTURE MOUNTING HEIGHT (FT.), "K"	POLE HEIGHT (FT.)	USE
20	18	
25	23	RESIDENTIAL
30	28	ARTERIAL
35	33	

ARM LENGTH (FT.) "J"	ARM RISE (INCHES)
4	32
6 (STD.)	32
8	32
10	32
12	32

NOTES:

1. **THIS LIGHTING STANDARD CAN BE USED ALONG RESIDENTIAL AND LOCAL ACCESS STREETS.**
2. **CHECK AND COORDINATE WITH CLARK PUBLIC UTILITIES (CPU) FOR ANY HEIGHT CLEARANCE CONFLICTS.**

APPROVED MATERIALS LIST:
SEE CITY OF VANCOUVER'S WEB SITE;
http://www.cityofvancouver.us/publicworks/page/transportation-development-review-information

I:\CITYAPPS\AUTOCAD\STD_DETAILS\DRAWING_FILES\T21-02.DWG

CITY OF Vancouver WASHINGTON

TYPE "A" AND TYPE "AT" LIGHTING STANDARDS

CITY OF VANCOUVER
DEPARTMENT OF PUBLIC WORKS
TRANSPORTATION DIVISION

DRAWN BY	APPROVED BY	APPROVAL DATE
CDC		8/04
REVISION	APPROVED BY	APPROVAL DATE
7		3/24

STD. PLAN NO.
T21-02

NOTES:

1. DIRECT BURIAL POLES ARE AN OPTION FOR TYPE D LIGHTING STANDARDS, SEE MATERIALS LIST.

APPROVED MATERIALS LIST:
SEE CITY OF VANCOUVER'S WEB SITE;
http://www.cityofvancouver.us/publicworks/page/transportation-development-review-information

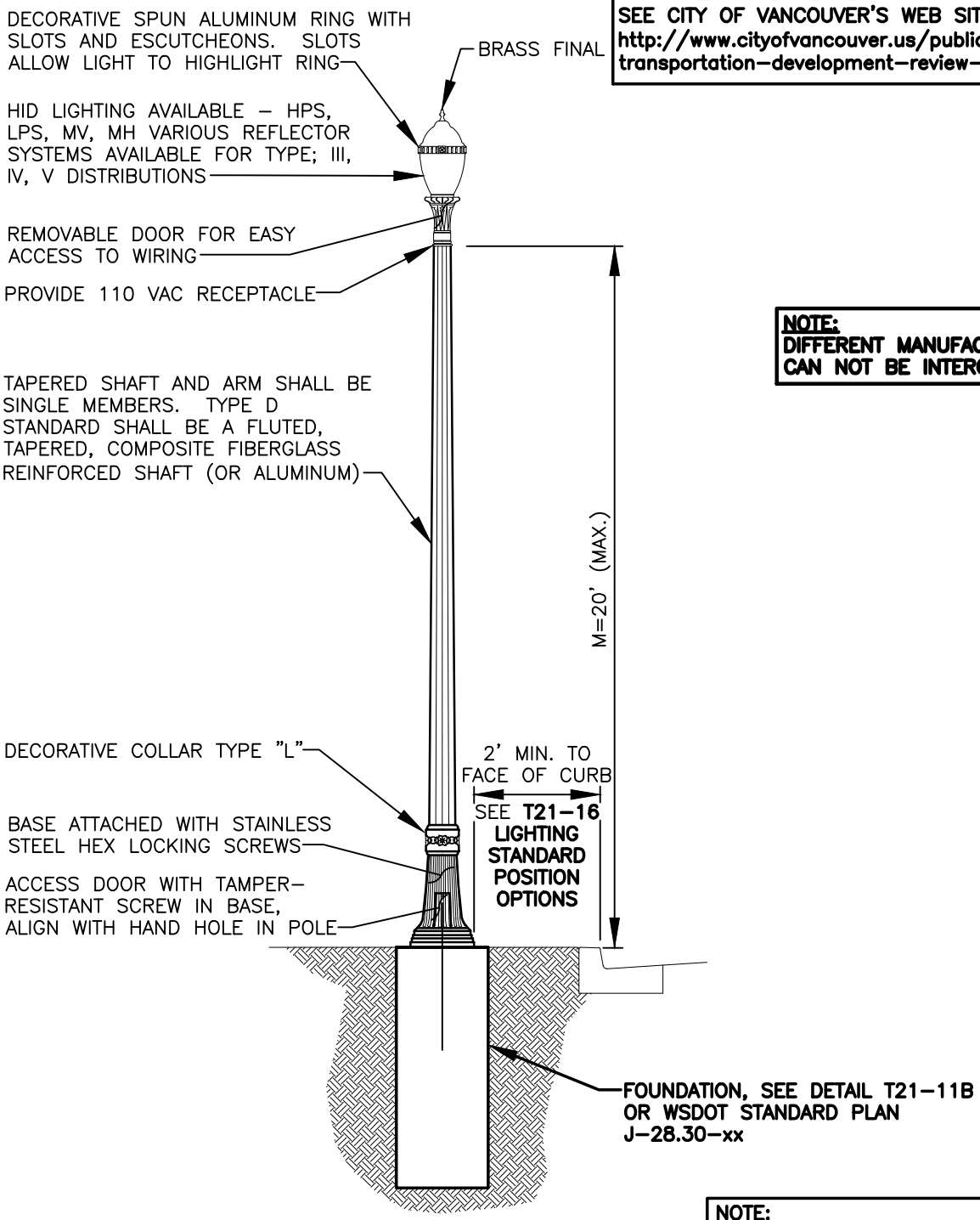

NOTE:
DIFFERENT MANUFACTURER PARTS CAN NOT BE INTERCHANGED.

NOTE:
THIS LIGHTING STANDARD SHALL BE USED IN THE UPTOWN LIGHTING DISTRICT AND ON RESIDENTIAL STREETS, UNLESS THE SURROUNDING NEIGHBORHOOD LIGHTING FIXTURE IS THE TYPE A, TYPE AT OR TYPE N AND WILL BE DETERMINED ON A CASE BY CASE BASIS.

REFERENCES TO WSDOT STANDARD PLANS, USE THE MOST CURRENT VERSION OF THESE STANDARD PLANS.

I:\CITYAPPS\AUTOCAD\STD_DETAILS\DRAWING_FILES\T21-04.DWG

CITY OF Vancouver WASHINGTON

TYPE"D" LIGHTING STANDARDS

CITY OF VANCOUVER
DEPARTMENT OF PUBLIC WORKS
TRANSPORTATION DIVISION

DRAWN BY	APPROVED BY	APPROVAL DATE
CDC		8/04
REVISION	APPROVED BY	APPROVAL DATE
7		3/24

STD. PLAN NO.
T21-04

NOTES:

APPROVED MATERIALS LIST:
SEE CITY OF VANCOUVER'S WEB SITE;
http://www.cityofvancouver.us/publicworks/page/transportation-development-review-information

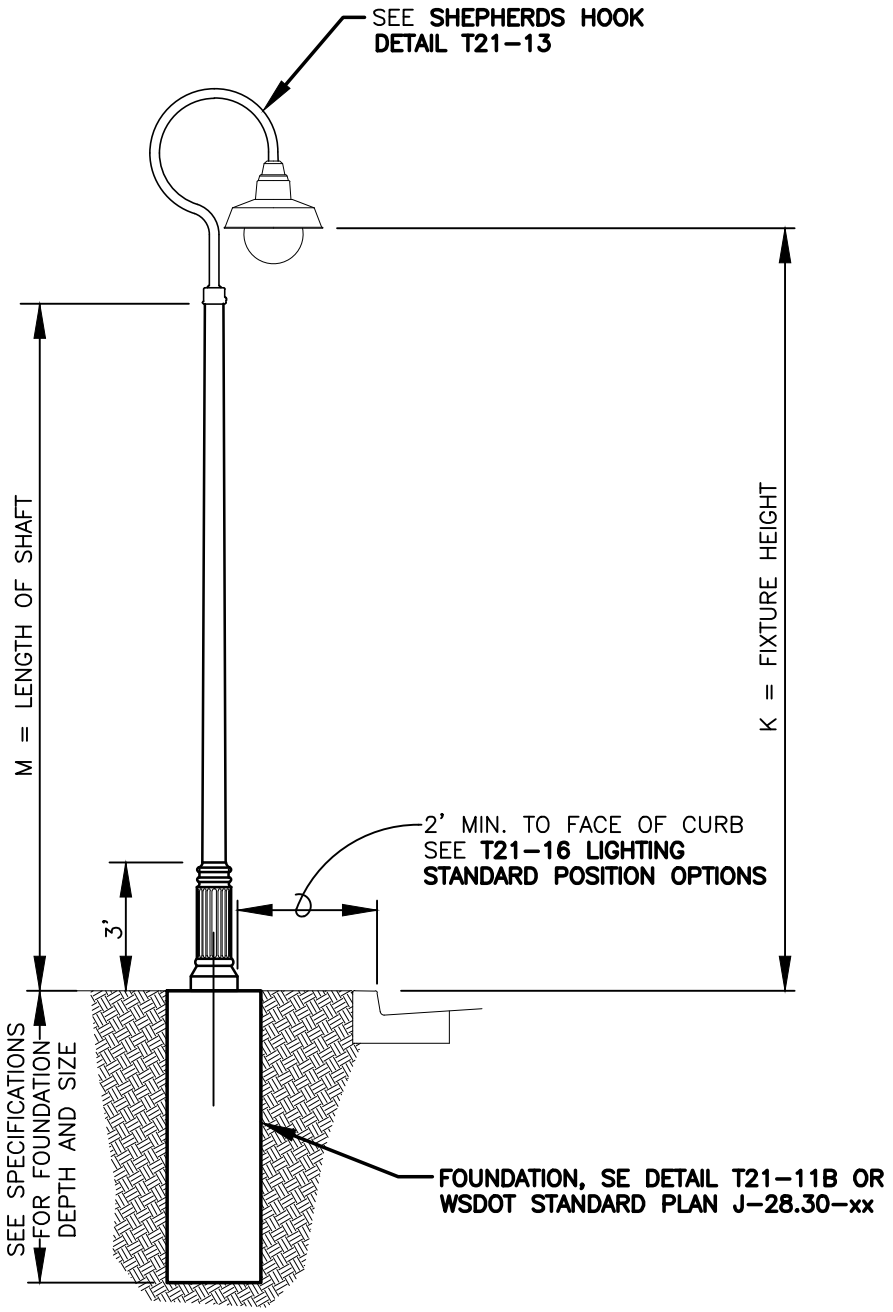

TYPE	AREA	M
OFFICER'S ROW AND HISTORIC RESERVE	ROADWAY	20'
	PATHWAY	14'

REFERENCES TO WSDOT STANDARD PLANS, USE THE MOST CURRENT VERSION OF THESE STANDARD PLANS.

NOTE:
THIS LIGHTING STANDARD SHALL BE USED IN THE OFFICERS ROW LIGHTING DISTRICT ONLY.

CITY OF Vancouver WASHINGTON

TYPE "O" LIGHTING STANDARDS

CITY OF VANCOUVER
DEPARTMENT OF PUBLIC WORKS
TRANSPORTATION DIVISION

DRAWN BY	APPROVED BY	APPROVAL DATE
CDC		8/04
REVISION	APPROVED BY	APPROVAL DATE
7		3/24

STD. PLAN NO.
T21-06

I:\CITYAPPS\AUTOCAD\STD_DETAILS\DRAWING_FILES\T21-06.DWG

NOTES:

APPROVED MATERIALS LIST:
SEE CITY OF VANCOUVER'S WEB SITE;
http://www.cityofvancouver.us/publicworks/page/transportation-development-review-information

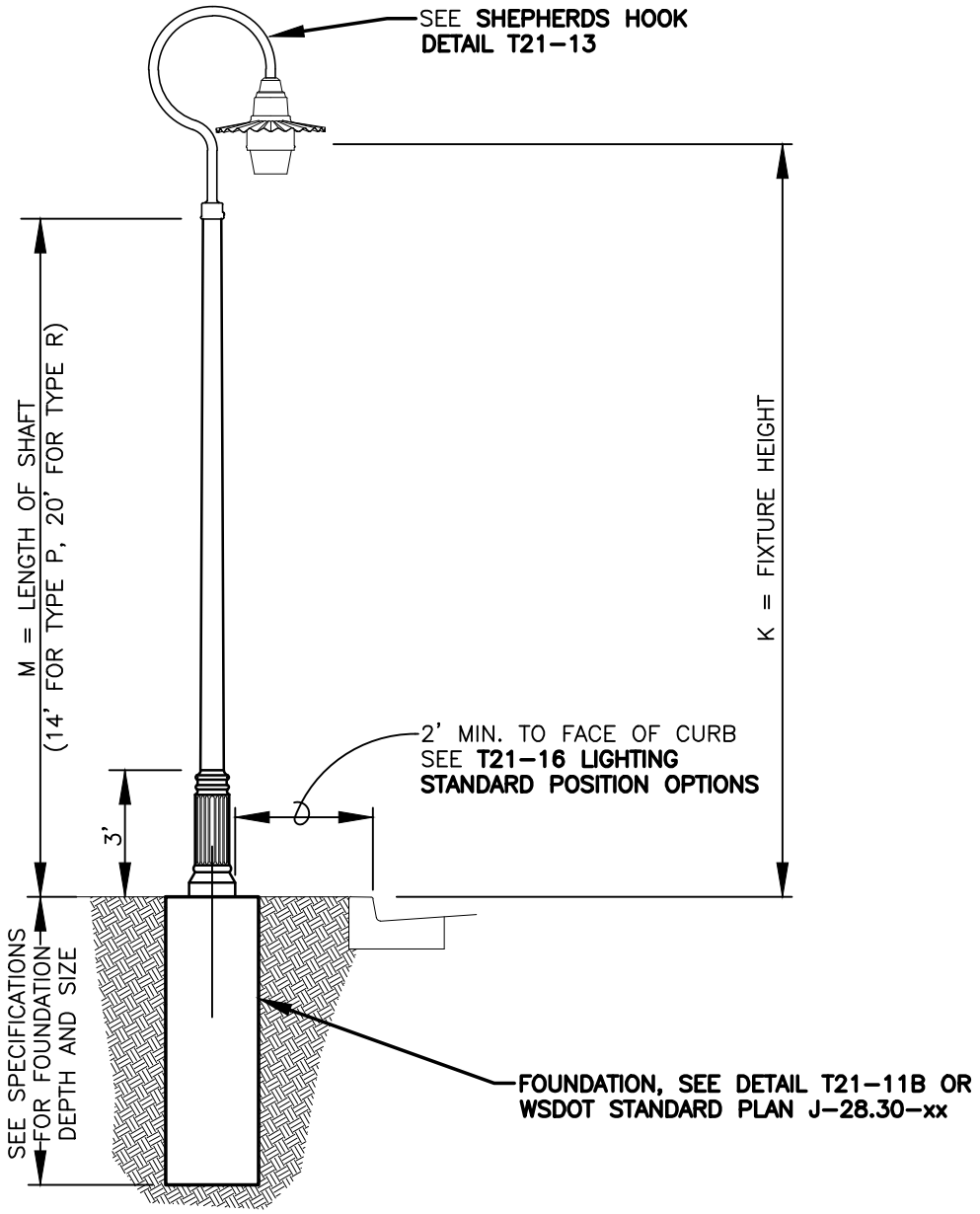

REFERENCES TO WSDOT STANDARD PLANS, USE THE MOST CURRENT VERSION OF THESE STANDARD PLANS.

NOTE:
LIGHTING STANDARD TYPE P SHALL BE USED IN THE PROMENADE PATHWAY LIGHTING DISTRICT ONLY.
LIGHTING STANDARD TYPE R SHALL BE USED IN THE PROMENADE ROADWAY LIGHTING DISTRICT ONLY.

I:\CITYAPPS\AUTOCAD\STD_DETAILS\DRAWING_FILES\T21-07.DWG

CITY OF Vancouver WASHINGTON

TYPE "P" AND TYPE "R" LIGHTING STANDARDS

CITY OF VANCOUVER
DEPARTMENT OF PUBLIC WORKS
TRANSPORTATION DIVISION

DRAWN BY	APPROVED BY	APPROVAL DATE
CDC		8/04
REVISION	APPROVED BY	APPROVAL DATE
7		3/24

STD. PLAN NO.
T21-07

NOTES:

APPROVED MATERIALS LIST:
SEE CITY OF VANCOUVER'S WEB SITE;
http://www.cityofvancouver.us/publicworks/page/transportation-development-review-information

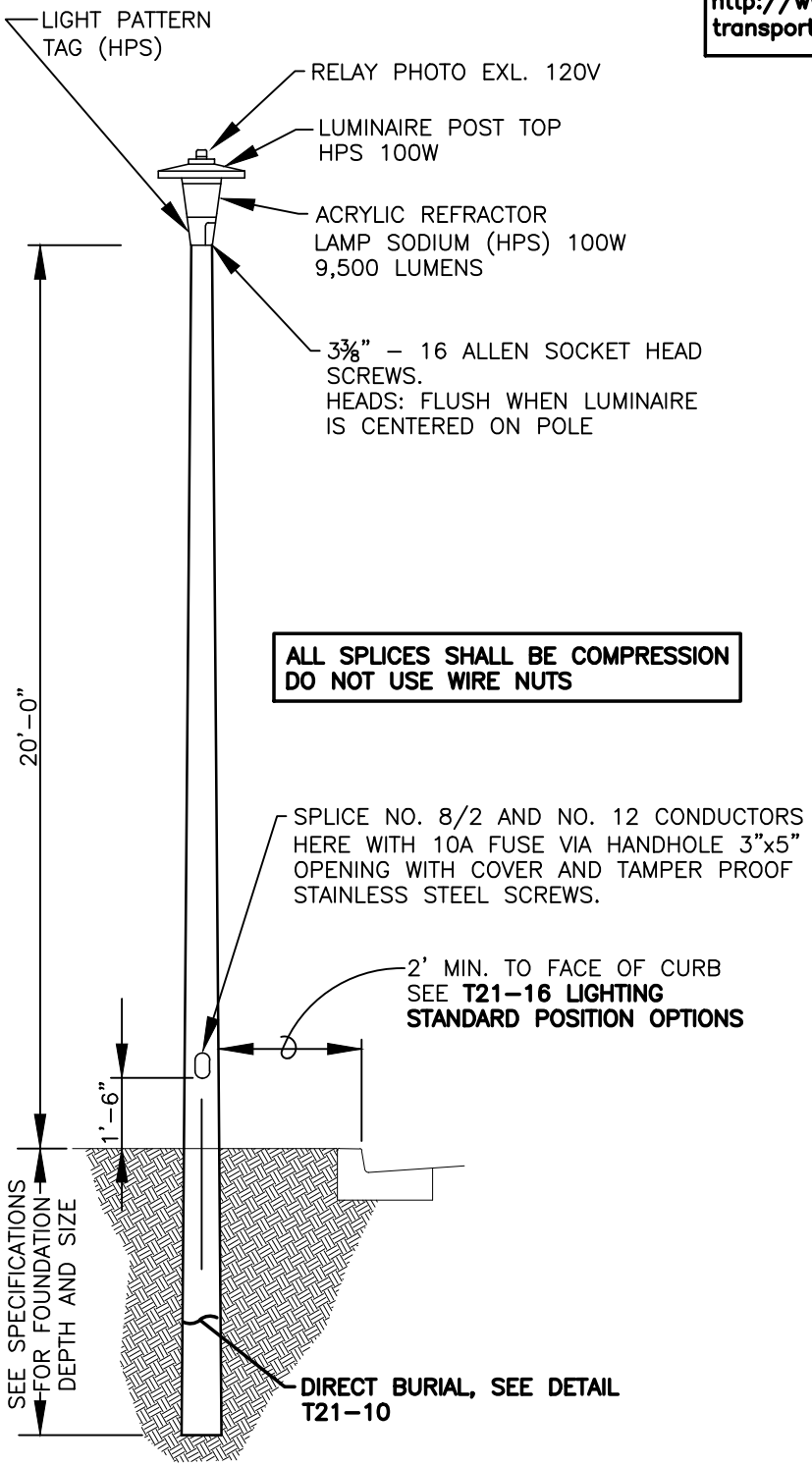

ALL SPLICES SHALL BE COMPRESSION
DO NOT USE WIRE NUTS

NOTE:
LIGHTING STANDARD TYPE N CAN BE USED ALONG RESIDENTIAL OR LOCAL ACCESS STREET ONLY OR MATCHING THE SURROUNDING NEIGHBORHOOD.

CITY OF Vancouver WASHINGTON

TYPE "N" LIGHTING STANDARDS

CITY OF VANCOUVER
DEPARTMENT OF PUBLIC WORKS
TRANSPORTATION DIVISION

DRAWN BY	APPROVED BY	APPROVAL DATE
CDC		8/04
REVISION	APPROVED BY	APPROVAL DATE
7		3/24

STD. PLAN NO.
T21-08

I:\CITYAPPS\AUTOCAD\STD_DETAILS\DRAWING_FILES\T21-08.DWG

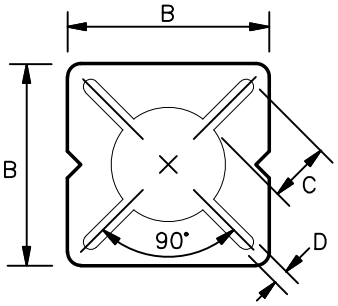

DETAIL A

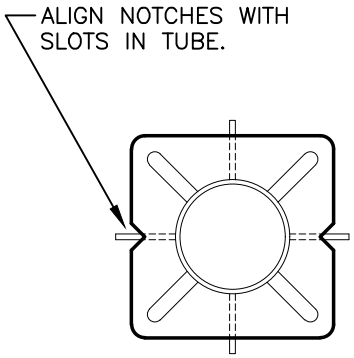

MOUNTING FLANGE
(SEE DETAIL A)

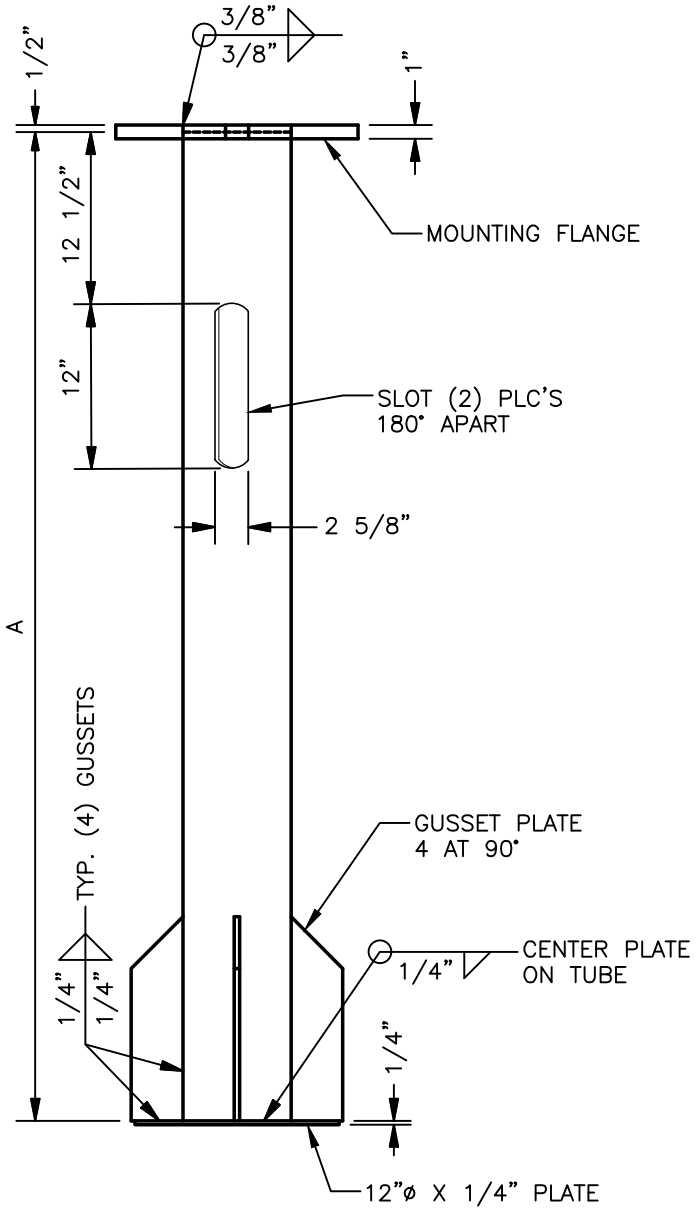

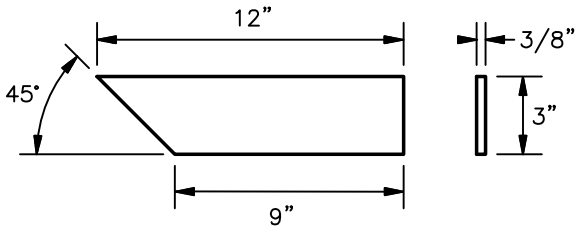

GUSSET PLATE

PRODUCT SPECIFICATIONS	BTP–663–60–12S	BTP–663–84–16S
A (LENGTH)	60 1/2"	84 1/2"
B	12"	15 3/4"
C	4 3/16"	5 7/16"
D	1 1/16"	1 1/8"
MOUNTING FLANGE	LBP–6ES–12S	LBP–66S–15S
DIAMETER	6 5/8"	6 5/8"
WALL TUBE	0.280"	0.280"

NOTE:

1. VARIES WITH APPLICATION. SEE PRODUCT SPECIFICATIONS TABLE.

CITY OF Vancouver WASHINGTON

TYPE "A" - STEEL LIGHT POLE FOUNDATION

CITY OF VANCOUVER
DEPARTMENT OF PUBLIC WORKS
TRANSPORTATION DIVISION

DRAWN BY	APPROVED BY	APPROVAL DATE
CDC		2/21
REVISION	APPROVED BY	APPROVAL DATE
3		3/24

STD. PLAN NO.
T21-10A

I:\CITYAPPS\AUTOCAD\STD_DETAILS\DRAWING_FILES\T21-10A.DWG

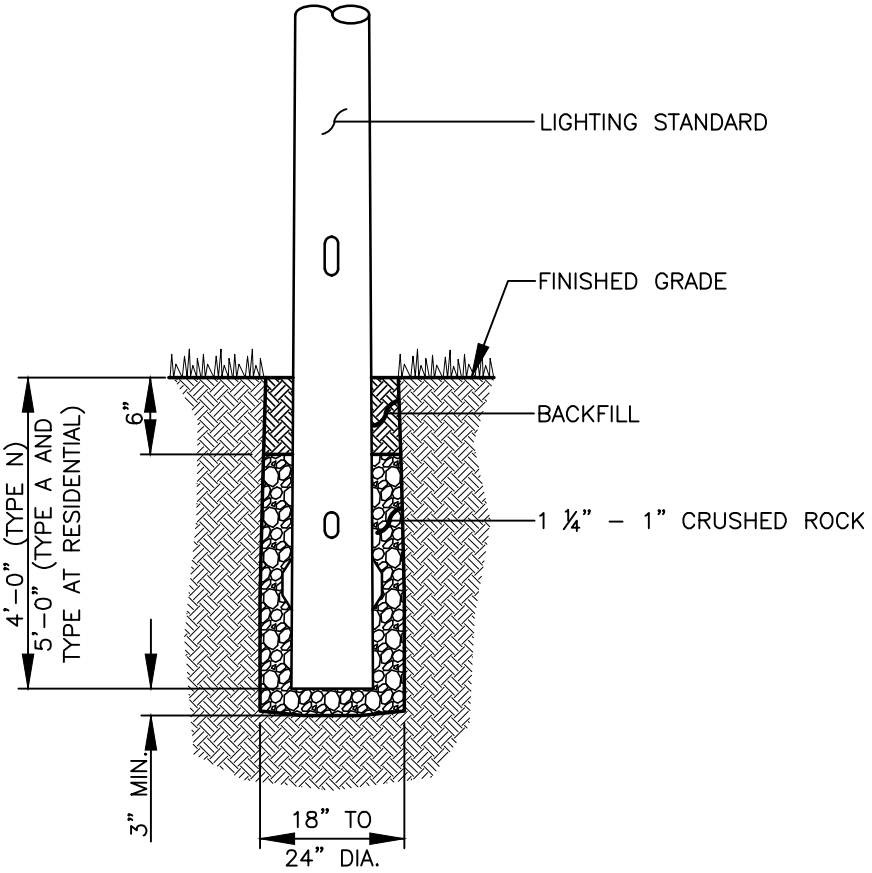

NOTE:

1. TO BE USED **ONLY** FOR **TYPE A AND TYPE AT RESIDENTIAL LIGHTING STANDARD (T21–03), TYPE D LIGHTING STANDARD (T21–04)** OR **TYPE N LIGHTING STANDARD (T21–08).**

I:\CITYAPPS\AUTOCAD\STD_DETAILS\DRAWING_FILES\T21-10B.DWG

CITY OF Vancouver WASHINGTON

DIRECT BURIAL FOR STREET LIGHTING STANDARD

CITY OF VANCOUVER
DEPARTMENT OF PUBLIC WORKS
TRANSPORTATION DIVISION

DRAWN BY	APPROVED BY	APPROVAL DATE
CDC		8/08
REVISION	APPROVED BY	APPROVAL DATE
4		3/24

STD. PLAN NO.
T21-10B

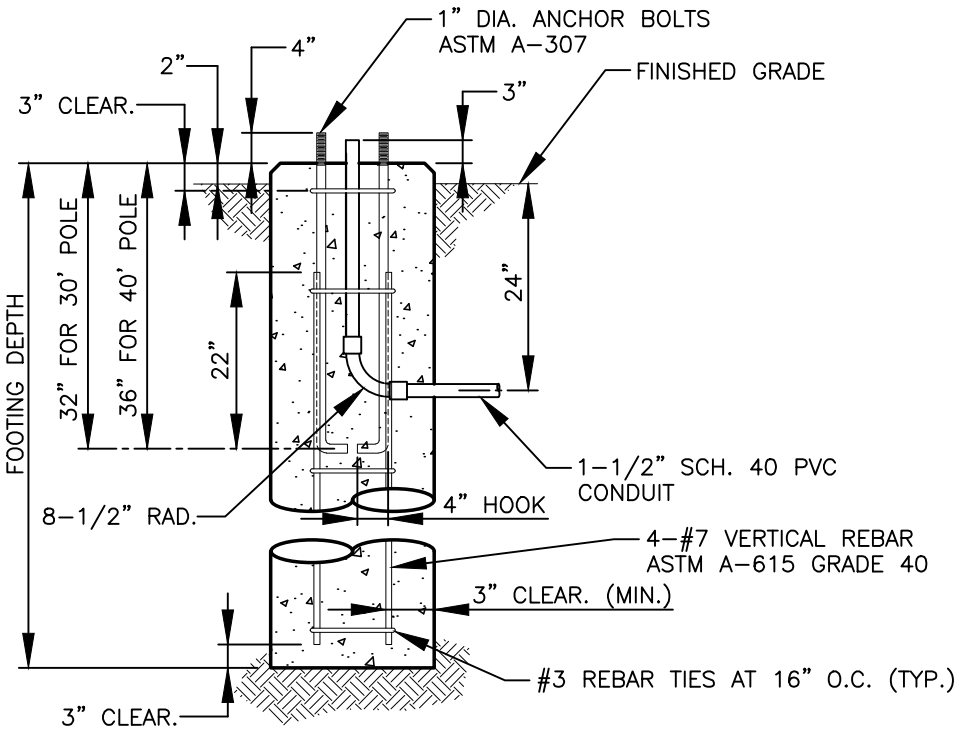

MOUNTING BASE DETAIL

NOTE:
CONCRETE STRENGTH = 3,000 PSI AT 28 DAYS.
CONCRETE STRENGTH = 2,000 PSI PRIOR TO SETTING POLE.

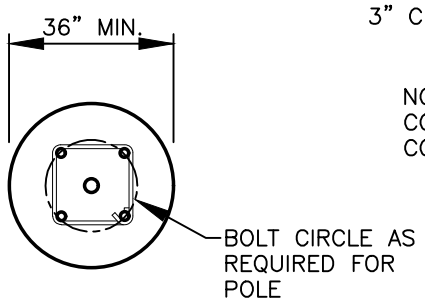

MOUNTING BASE TOP VIEW

POLE LENGTH (FEET)	MINIMUM FOOTING DEPTH IN FEET. SEE SOIL TABLE		
	A	B	C
30	5'-0"	6'-6"	8'-0"
40	5'-6"	7'-0"	8'-6"

NOTE:
1. FORMING MATERIALS (SONOTUBE) SHALL BE REMOVED FROM THE TOP OF THE FOUNDATION TO SIX INCHES BELOW FINISHED GRADE AFTER CONCRETE HAS HAD A CHANCE TO SET UP.
2. SOIL BELOW MOUNTING BASE TO BE UNDISTURBED.

SOIL TYPE	CLASS OF MATERIAL (UNIFORM BUILDING CODE)	
A	GOOD	COMPACT WELL-GRADED SAND AND GRAVEL.
	HARD CLAY	WELL-GRADED FINE AND COARSE SAND (ALL DRAINED SO WATER WILL NOT STAND).
B	AVERAGE	COMPACT FINE SAND MEDIAM CLAY COMPACT SANDY LOAM LOOSE COARSE SAND AND GRAVEL (ALL DRAINED SO WATER WILL NOT STAND).
C	POOR	SOFT CLAY CLAY LOAM POORLY COMPACTED SAND CLAYS CONTAINING LARGE AMOUNTS OF SILT (WATER STANDS DURING WET SEASON).

NOTE:
1. CAST-IN-PLACE FOUNDATIONS CAN BE USED INSTEAD OF PRECAST FOUNDATIONS WHEN NECESSARY WITH CITY TRAFFIC ENGINEER'S APPROVAL. FOR CAST-IN-PLACE FOUNDATIONS, SEE **WSDOT STANDARD PLAN J-28.30-xx "STEEL LIGHT STANDARD FOUNDATION TYPES A AND B".**

REFERENCES TO WSDOT STANDARD PLANS, USE THE MOST CURRENT VERSION OF THESE STANDARD PLANS.

CITY OF Vancouver WASHINGTON

CAST-IN-PLACE FOUNDATION FOR STREET LIGHTING

CITY OF VANCOUVER
DEPARTMENT OF PUBLIC WORKS
TRANSPORTATION DIVISION

DRAWN BY	APPROVED BY	APPROVAL DATE
CDC		1/15
REVISION	APPROVED BY	APPROVAL DATE
4		3/24

STD. PLAN NO. **T21-11B**

I:\CITYAPPS\AUTOCAD\STD_DETAILS\DRAWING_FILES\T21-11B.DWG

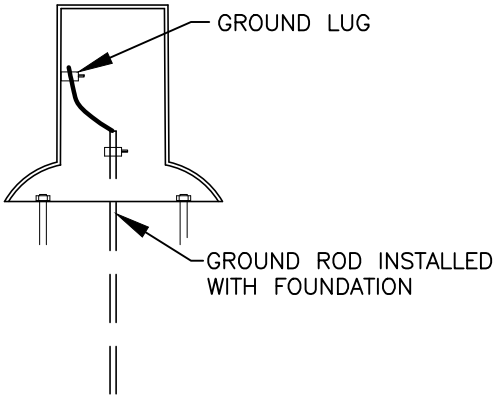

GROUNDING DETAIL

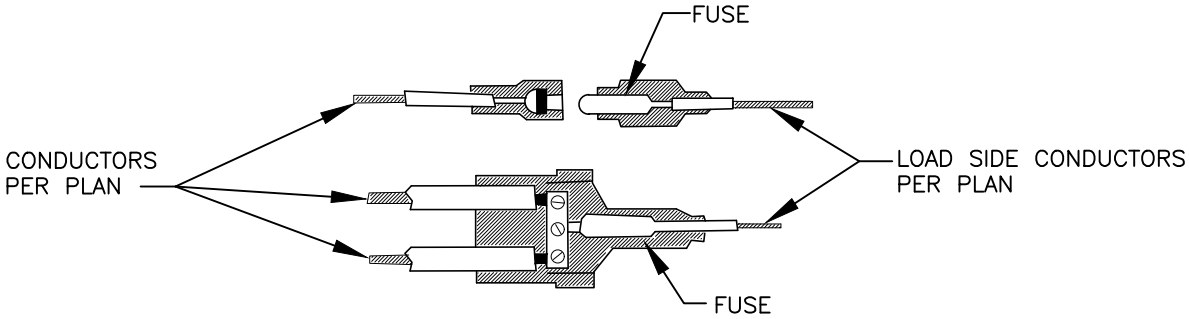

"V" DISCONNECT – FUSED

FOR A.W.G.

NOTES:

1. ALUMINUM CONDUCTORS NOT ALLOWED.

I:\CITYAPPS\AUTOCAD\STD_DETAILS\DRAWING_FILES\T21-12.DWG

CITY OF Vancouver WASHINGTON

STREET LIGHTING GROUNDING DETAILS AND "V" DISCONNECT - FUSED FOR AWG.

CITY OF VANCOUVER
DEPARTMENT OF PUBLIC WORKS
TRANSPORTATION DIVISION

DRAWN BY	APPROVED BY	APPROVAL DATE
CDC		8/04
REVISION	APPROVED BY	APPROVAL DATE
7		3/24

STD. PLAN NO. **T21-12**

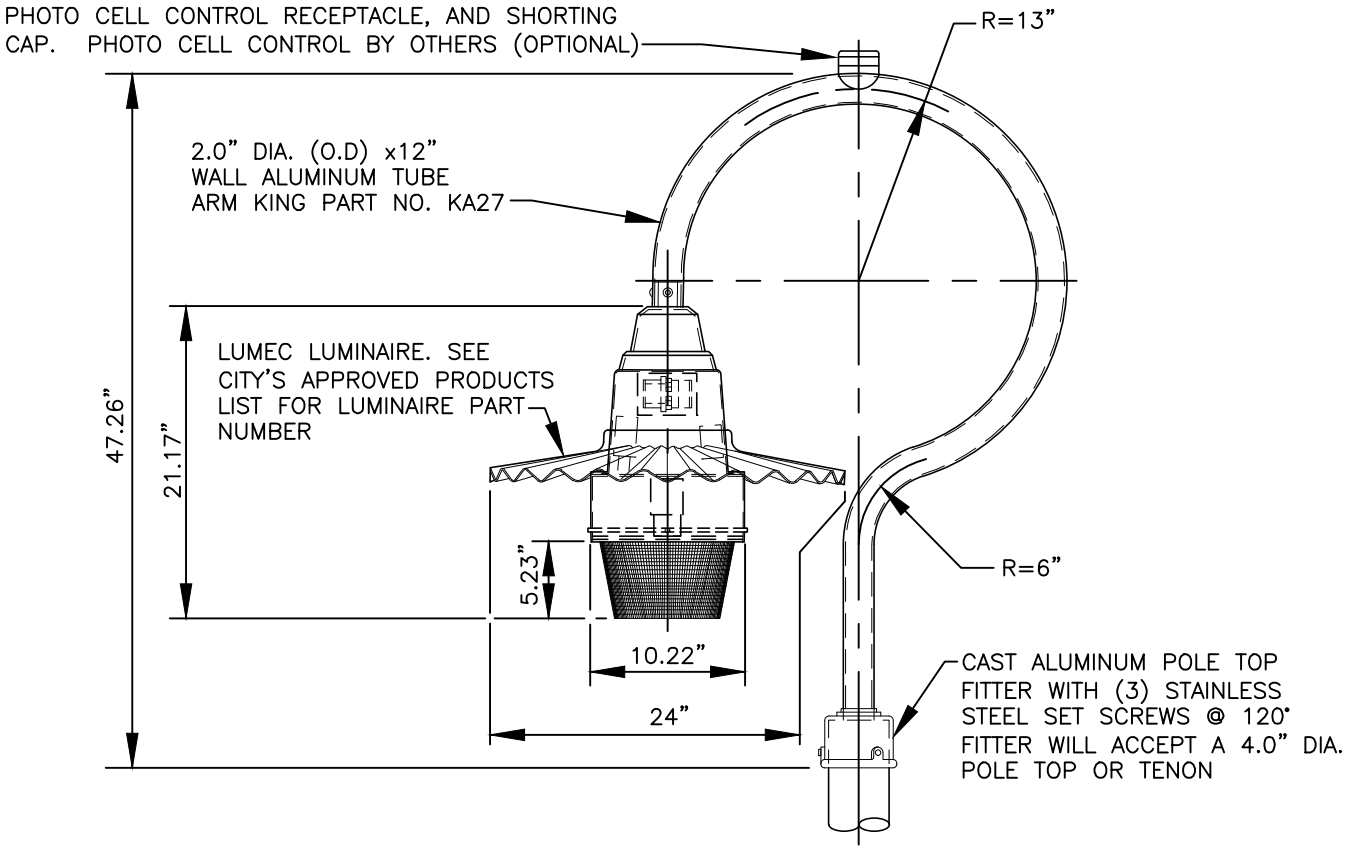

TYPE P AND TYPE R LIGHTING FIXTURE

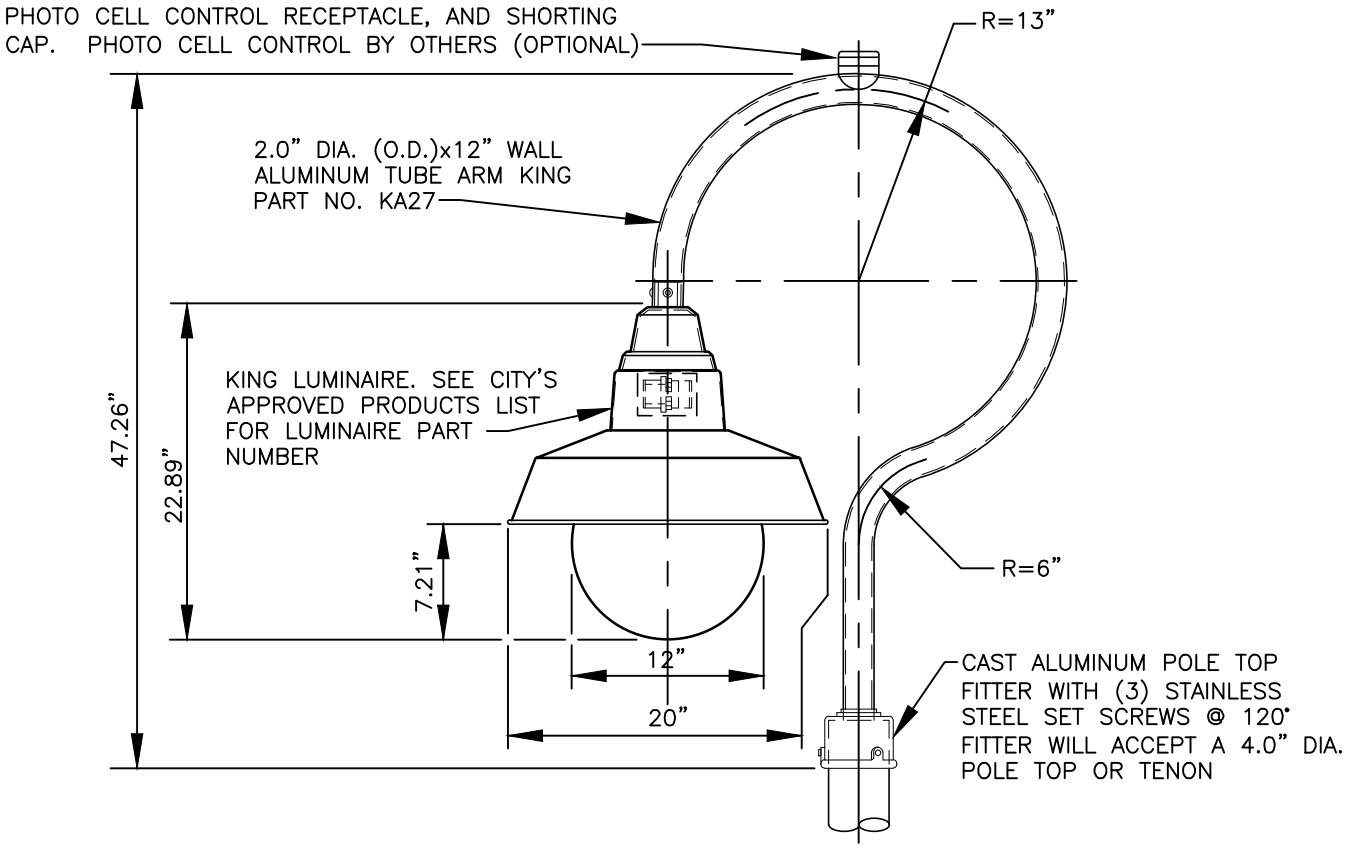

TYPE O LIGHTING FIXTURE

I:\CITYAPPS\AUTOCAD\STD_DETAILS\DRAWING_FILES\T21-13.DWG

CITY OF Vancouver WASHINGTON

SHEPHARDS HOOK DETAIL FOR TYPE "0", TYPE "P", AND TYPE "R" STREET LIGHTING STANDARD

CITY OF VANCOUVER
DEPARTMENT OF PUBLIC WORKS
TRANSPORTATION DIVISION

DRAWN BY	APPROVED BY	APPROVAL DATE
CDC	[illegible]	8/04
REVISION	APPROVED BY	APPROVAL DATE
7	[illegible]	3/24

STD. PLAN NO.
T21-13

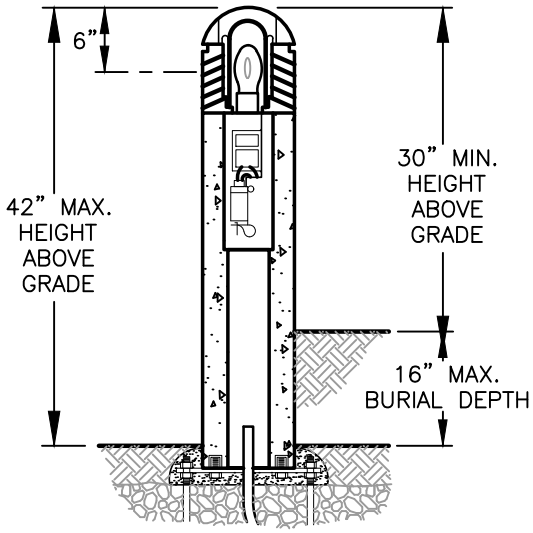

SINGLE FUNCTION LUMINAIRE
CONCRETE SHAFT

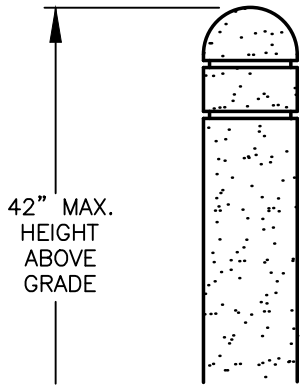

BOLLARD
CONCRETE SHAFT

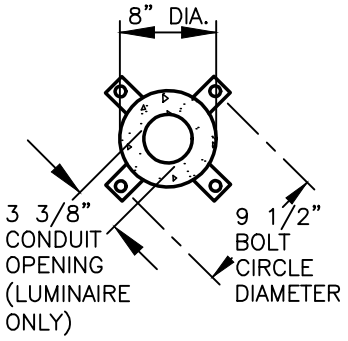

BASE PLAN

NOTES:

1. CERTIFICATION SHALL BE UNDERWRITERS LABORATORIES LISTED FOR 120 AND 240 VOLT WET LOCATIONS.
2. TOP CAP SHALL BE A ONE PIECE ALUMINUM CASTING 3/16" MINIMUM THICKNESS, SECURED TO LOUVERS BY CONCEALED ALLEN SCREWS IN KEYHOLE SLOTS. FOR RE-LAMPING ACCESS, ALLEN SCREWS SHALL NOT REQUIRE COMPLETE REMOVAL.
3. LOUVERS SHALL BE A ONE PIECE ALUMINUM CASTING WITH VERTICAL SUPPORT RIBS AT 90° INTERVALS. HORIZONTAL LOUVER BLADES SHALL HAVE A 1 3/4" DEPTH, A 65° UPWARD PITCH AND PROVIDE LIGHT SOURCE CUTOFF ABOVE HORIZONTAL. LOUVER CASTING SHALL BE SECURED TO SHAFT BY FOUR INTERNAL TIE RODS.
4. LAMP ENCLOSURE SHALL BE ONE PIECE TEMPERED MOLDED GLASS WITH INTERNAL FLUTES AND FULL GASKETING AT BOTTOM EDGE.
5. SOCKET SHALL BE PORCELAIN MEDIUM BASE RATED 4KV.
6. FIXTURE HEAD SHALL ALLOW FLOW-THROUGH VENTILATION AROUND AND ABOVE THE LAMP ENCLOSURE.
7. SHAFT CEMENT SHALL CONFORM TO CURRENT SPECIFICATIONS FOR "PORTLAND CEMENT." ASTM C150, TYPE I OR II. AGGREGATES SHALL MEET CURRENT REQUIREMENTS OF "SPECIFICATIONS FOR CONCRETE AGGREGATES," ASTM C33. WATER SHALL BE CLEAN AND FREE FROM DELETERIOUS AMOUNTS OF SILT, OIL, ACIDS, ALKALIES OR ORGANIC MATERIALS. WIRE FOR REINFORCEMENT SHALL CONFORM TO ASTM A185. STEEL FOR LUGS AND PLATES SHALL CONFORM TO ASTM A36, OR A283 GRADE D.
8. BALLAST SHALL BE HIGH POWER FACTOR FOR -20°F STARTING, FACTORY MOUNTED TO A RIGID HARNESS FOR FIELD WIRING AND SUSPENSION FROM FIXTURE WITHIN THE CONCRETE SHAFT.
9. ANCHOR BOLTS SHALL BE FOUR 3/8" X 10" + 2" ZINC PLATED L-HOOKS, EACH WITH TWO NUTS, WASHERS AND A RIGID PRESSED BOARD TEMPLATE.
10. FINISH SHALL BE T.G.I.C. THERMOSET POLYESTER POWDER-COAT PAINT APPLIED OVER A CHROMATE CONVERSION COATING. NATURAL GRAY SHALL BE USED FOR THE CONCRETE COLOR FINISH. LUMINAIRE FINISH SHALL BE BLACK.
11. SURFACE SHALL BE MEDIUM SAND-BLASTED WITH ANTI-GRAFFITI SEALER. COLOR SHALL BE NATURAL GRAY OR INTEGRAL IN CONCRETE MIX.
12. CURE AND STRENGTH SHALL ALLOW FOR COMPLETION OF THE HYDRATION PROCESS, AND RESULT IN A 28 DAY COMPRESSIVE STRENGTH OF NOT LESS THAN 4,500 PSI.
13. MANUFACTURE SHALL BE BY FIBERGLASS MOLDS TO INSURE UNIFORM PARTS. MOLD PARTING LINES MAY BE SLIGHTLY VISIBLE IN FINISHED PARTS.
14. ANCHORAGE SHALL BE BY FOUR STEEL MOUNTING TABS FOR INSTALLATION ON FOUR 1/2" X 10" + 2" ZINC ELECTROPLATED L-HOOK ANCHOR BOLTS. EACH ANCHOR BOLT IS SUPPLIED WITH TWO NUTS, TWO WASHERS, AND A RIGID PRESSED BOARD TEMPLATE.
15. ELECTRICAL MODULE SHALL BE 100 WATT COATED 120 LINE VOLTS, 129 LINE WATTS AND 1.15 MAX. AMPS.
16. SHIPMENT SHALL BE PALLETIZED WITH ADEQUATE HOLD-DOWNS TO PREVENT LOAD MOVEMENT IN TRANSIT.
17. **KIM LIGHTING MODEL. SEE CITY'S APPROVED PRODUCTS LIST FOR PART NUMBER.**
18. SEE **TYPICAL CONNECTING PUBLIC STREET WITH PATHWAYS AND LIGHTING DETAIL T21-14B** FOR ADDITIONAL INFORMATION.

CITY OF Vancouver WASHINGTON

VANDAL RESISTANT BOLLARD (LIGHTED AND NON-LIGHTED)

CITY OF VANCOUVER
DEPARTMENT OF PUBLIC WORKS
TRANSPORTATION DIVISION

DRAWN BY	APPROVED BY	APPROVAL DATE
CDC		2/07
REVISION	APPROVED BY	APPROVAL DATE
7		3/24

STD. PLAN NO.
T21-14A

I:\CITYAPPS\AUTOCAD\STD_DETAILS\DRAWING_FILES\T21-14A.DWG

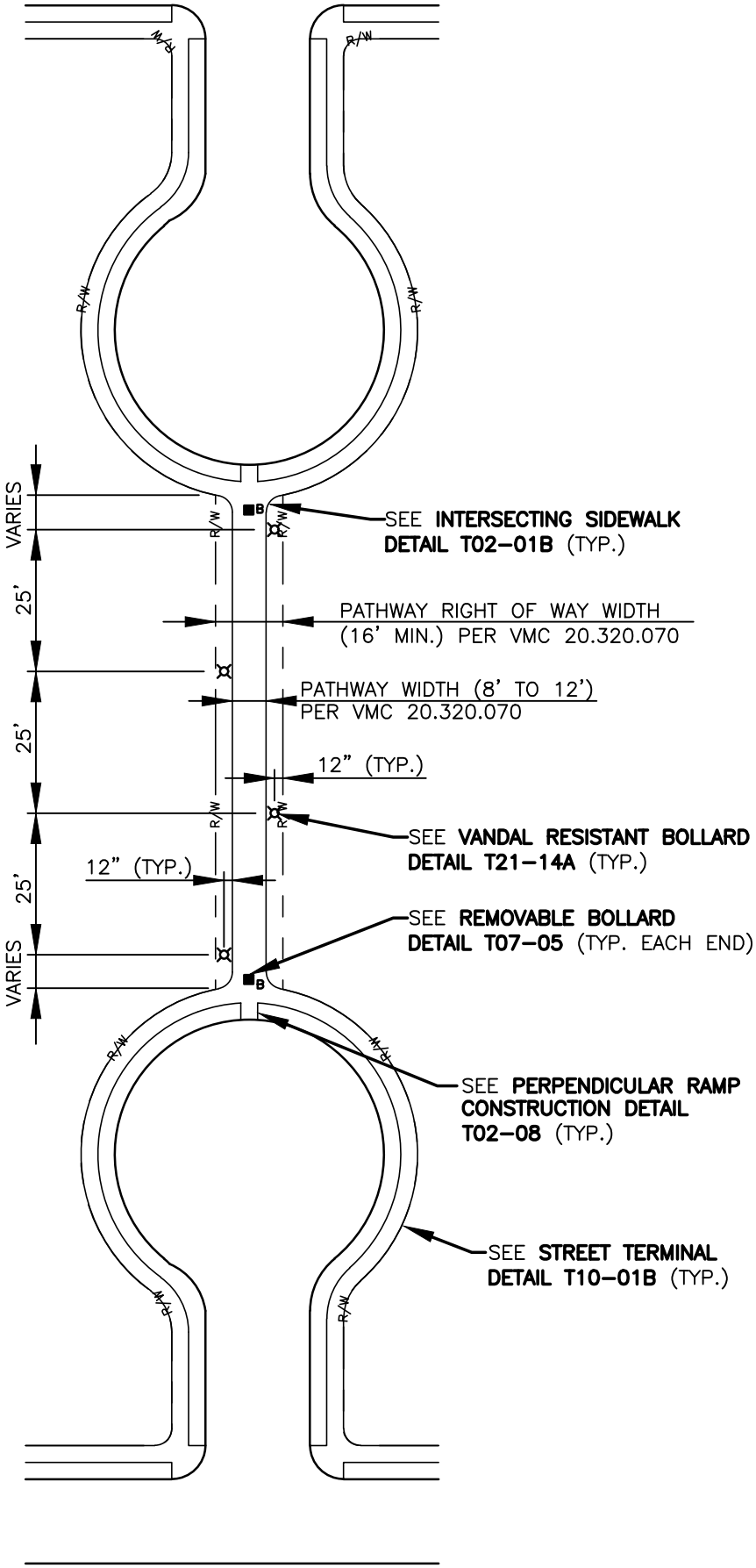

CITY OF Vancouver WASHINGTON

TYPICAL CONNECTING PUBLIC STREET WITH PATHWAYS AND LIGHTING

CITY OF VANCOUVER
DEPARTMENT OF PUBLIC WORKS
TRANSPORTATION DIVISION

DRAWN BY	APPROVED BY	APPROVAL DATE
CDC		2/07
REVISION	APPROVED BY	APPROVAL DATE
5		3/24

STD. PLAN NO.
T21-14B

I:\CITYAPPS\AUTOCAD\STD_DETAILS\DRAWING_FILES\T21-14B.DWG

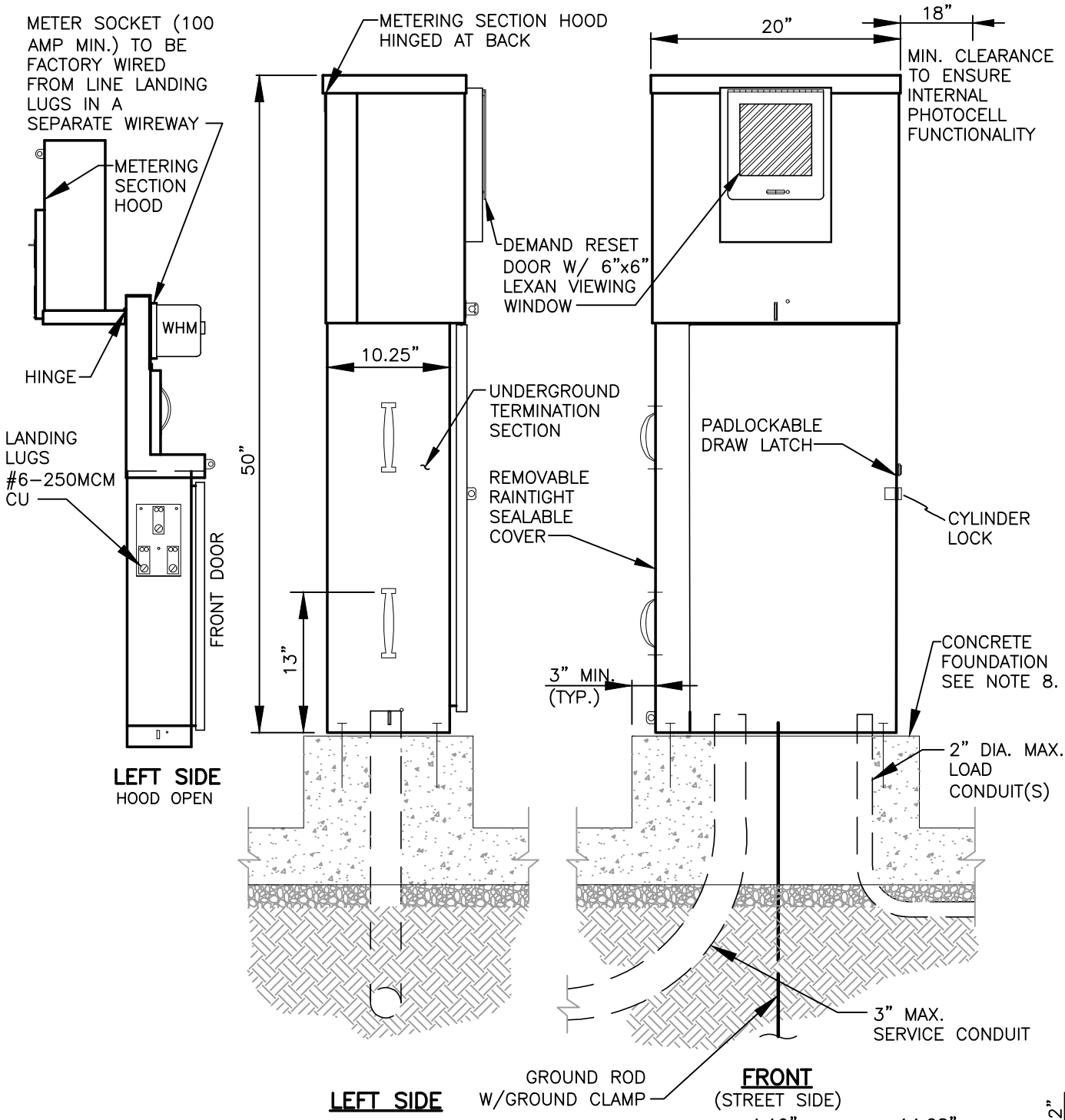

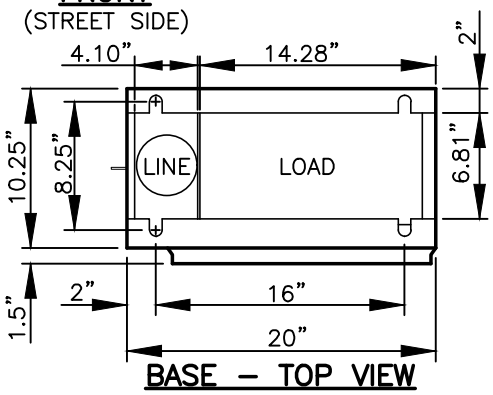

NOTES:

1. SEE SERVICE ENCLOSURE REQUIREMENTS ON STD. PLAN **T20–41**.
2. SEE WIRING DIAGRAM ON STD. PLAN **T21–15B**.
3. PLACE A SILICONE SEAL BETWEEN THE FOUNDATION AND THE CABINET.
4. ENCLOSURE SHALL BE TESCO CLASS 27–000M.
5. ALUMINUM CONDUCTORS NOT ALLOWED.
6. FOLLOW WSDOT STANDARD PLANS FOR ADDITIONAL GROUND ROD INSTALLATION.
7. SEE FOUNDATION PLAN ON STD. PLAN **T21–15C**.

CITY OF Vancouver WASHINGTON

STREET LIGHT CONTACTOR CABINET

CITY OF VANCOUVER
DEPARTMENT OF PUBLIC WORKS
TRANSPORTATION DIVISION

DRAWN BY	APPROVED BY	APPROVAL DATE
CDC		8/04
REVISION	APPROVED BY	APPROVAL DATE
7		3/24

STD. PLAN NO.
T21-15A

I:\CITYAPPS\AUTOCAD\STD_DETAILS\DRAWING_FILES\T21-15A.DWG

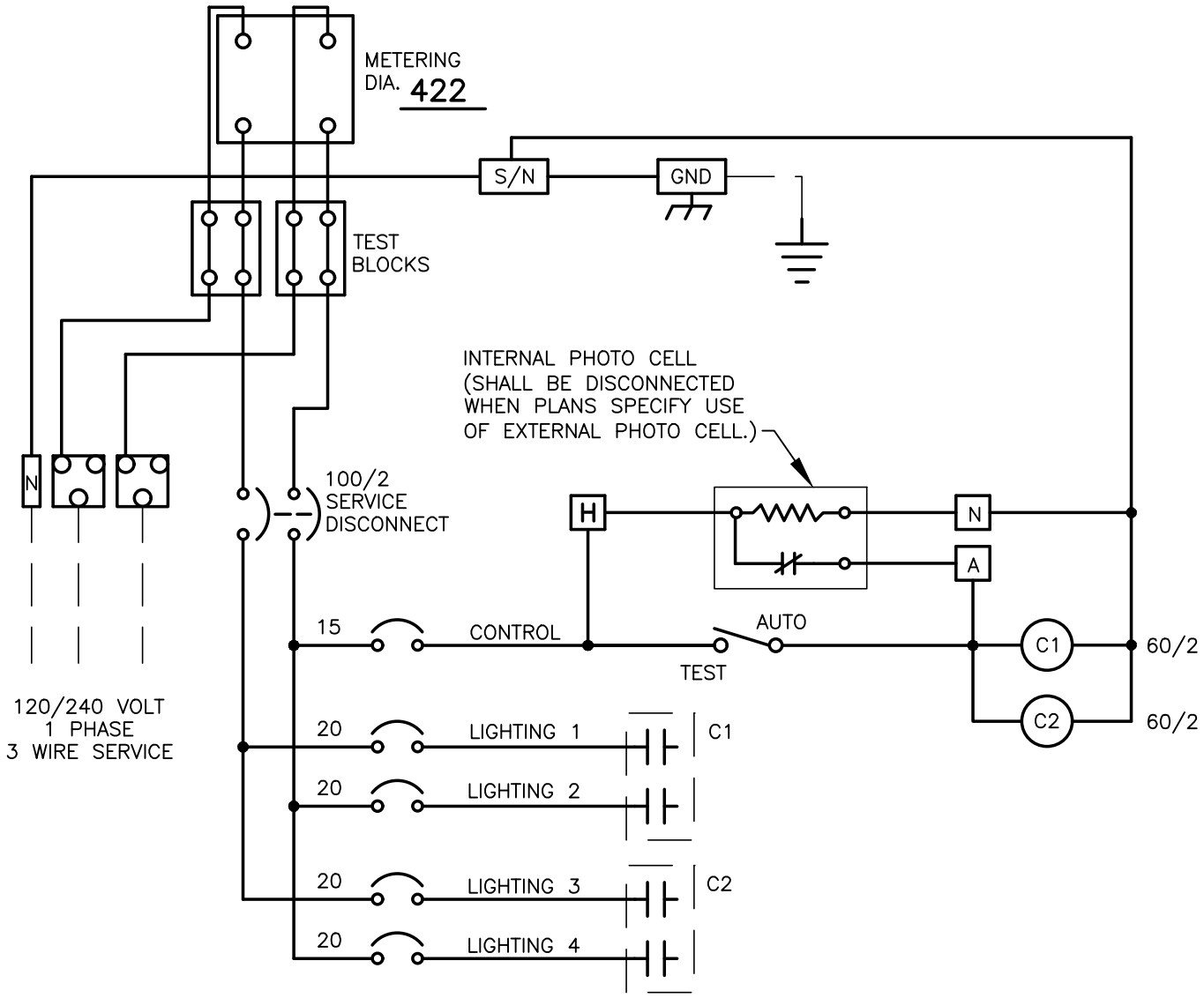

NOTES:

1. SEE STANDARD PLAN **T21–15A** FOR STREET LIGHT CONTACTOR CABINET DETAILS.
2. ALUMINUM CONDUCTORS ARE NOT ALLOWED.

CITY OF Vancouver WASHINGTON

STREET LIGHT CONTACTOR CABINET SERVICE WIRING DIAGRAM

CITY OF VANCOUVER
DEPARTMENT OF PUBLIC WORKS
TRANSPORTATION DIVISION

DRAWN BY	APPROVED BY	APPROVAL DATE
CDC		8/04
REVISION	APPROVED BY	APPROVAL DATE
7		3/24

STD. PLAN NO.
T21-15B

I:\CITYAPPS\AUTOCAD\STD_DETAILS\DRAWING_FILES\T21-15B.DWG

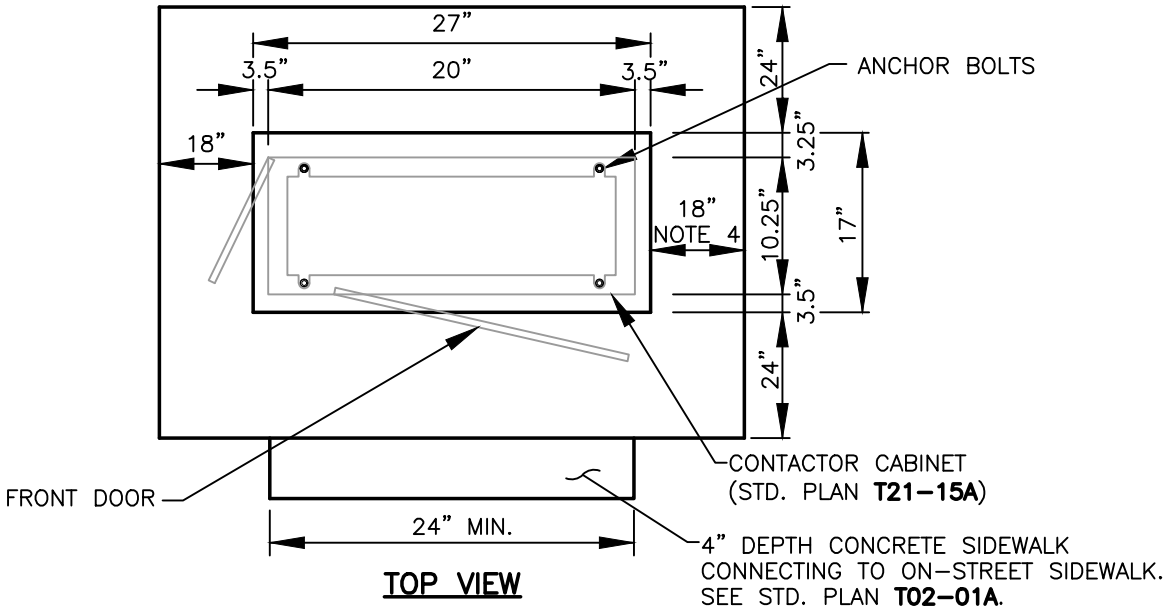

TOP VIEW

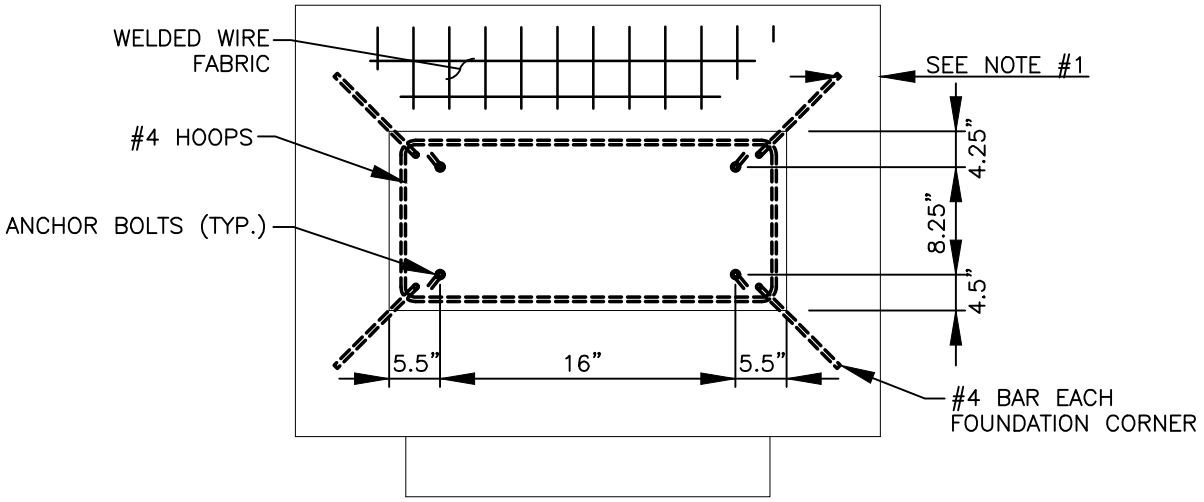

TOP VIEW – BOLT PATTERN AND STRUCTURAL SUPPORT

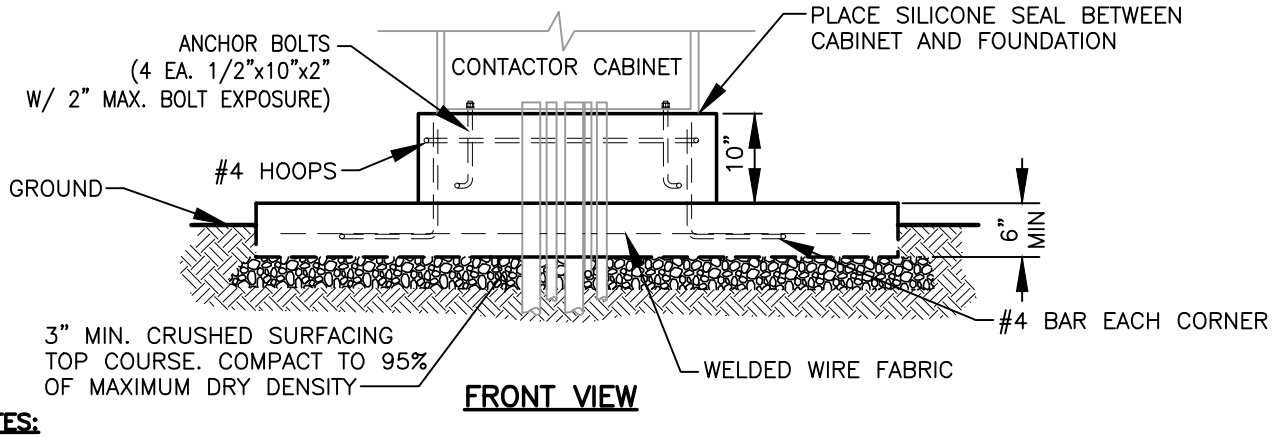

FRONT VIEW

NOTES:

1. 2" MINIMUM OF CONCRETE COVER ON ALL STRUCTURAL SUPPORT BARS.
2. CONDUITS SHALL EXTEND 2" MIN. AND 3" MAX. ABOVE CONCRETE MEASURED TO END OF BELL OR GROUND BUSHING.
3. ENSURE ALL DOORS CAN SWING OPEN 180 DEGREES.
4. 18" MINIMUM CLEARANCE ON RIGHT SIDE TO ENSURE INTERNAL PHOTOCELL FUNCTIONALITY.
5. SEE WSDOT STD. PLAN J-10.10 FOR SPECIFICATIONS.

CITY OF Vancouver WASHINGTON

STREET LIGHT CONTACTOR CABINET FOUNDATION

CITY OF VANCOUVER
DEPARTMENT OF PUBLIC WORKS
TRANSPORTATION DIVISION

DRAWN BY	APPROVED BY	APPROVAL DATE
CDC		3/24
REVISION	APPROVED BY	APPROVAL DATE
1		3/24

STD. PLAN NO. **T21-15C**

I:\CITYAPPS\AUTOCAD\STD_DETAILS\DRAWING_FILES\T21-15C.DWG

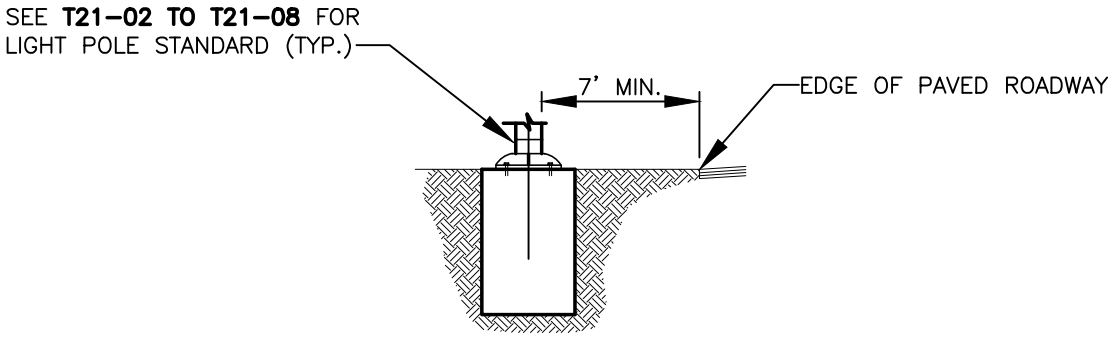

EDGE OF PAVEMENT (NO SIDEWALK)

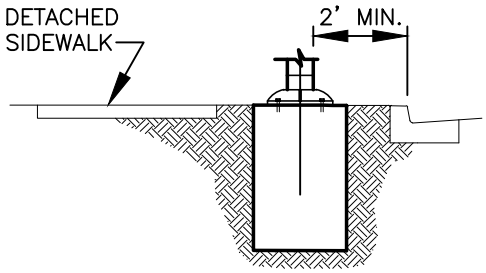

DETACHED SIDEWALK WITH PLANTER STRIP

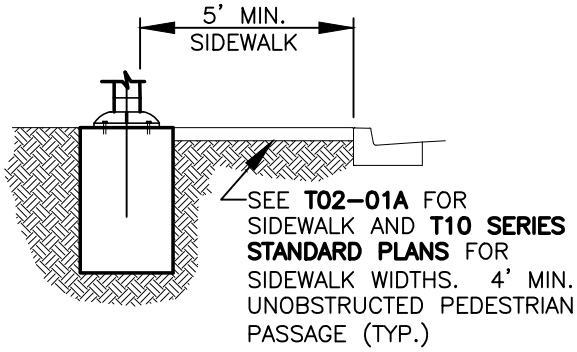

ATTACHED SIDEWALK OPTION 1

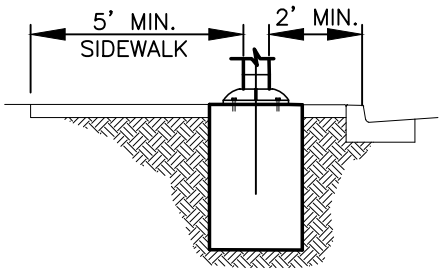

ATTACHED SIDEWALK OPTION 2
(REQUIRES ENGINEER'S
APPROVAL TO USE)

I:\CITYAPPS\AUTOCAD\STD_DETAILS\DRAWING_FILES\T21–16.DWG

CITY OF Vancouver WASHINGTON

LIGHTING STANDARD POSITION OPTIOINS

CITY OF VANCOUVER
DEPARTMENT OF PUBLIC WORKS
TRANSPORTATION DIVISION

DRAWN BY	APPROVED BY	APPROVAL DATE
CDC		1/15
REVISION	APPROVED BY	APPROVAL DATE
3		3/24

STD. PLAN NO.
T21-16

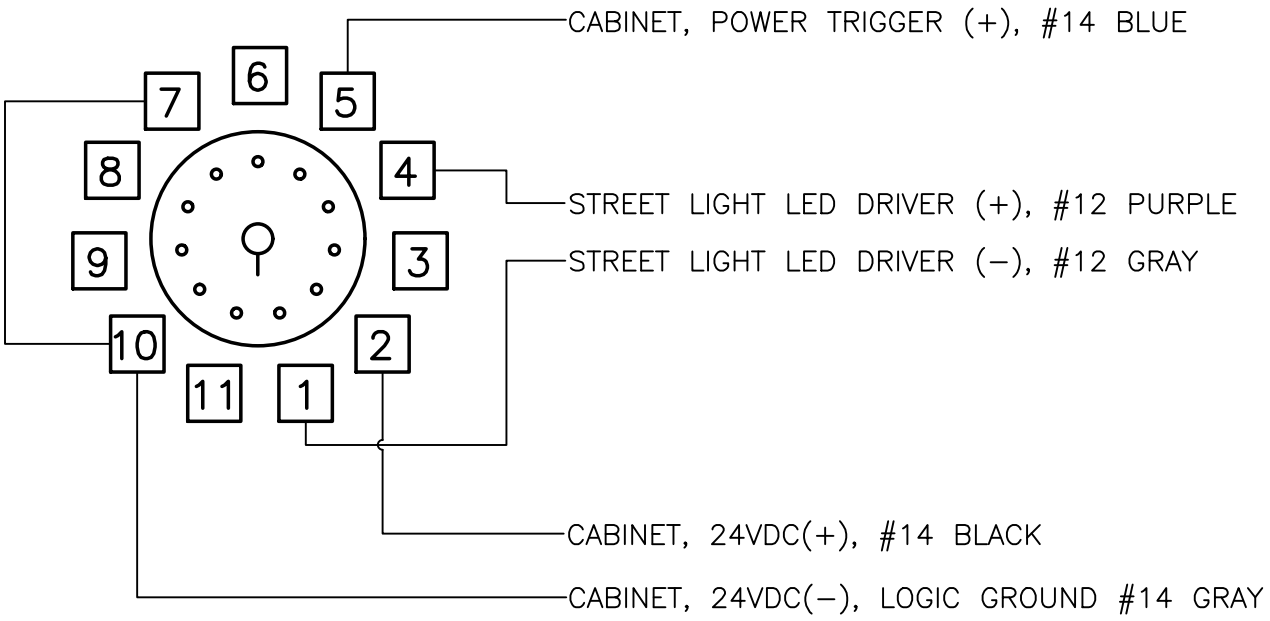

TIME DELAY RELAY, MACROMATIC TR−6192U WITH 11−PIN OCTAL SOCKET 70170−D, TO BE MOUNTED IN CONTROLLER CABINET.

TRAFFIC SIGNAL

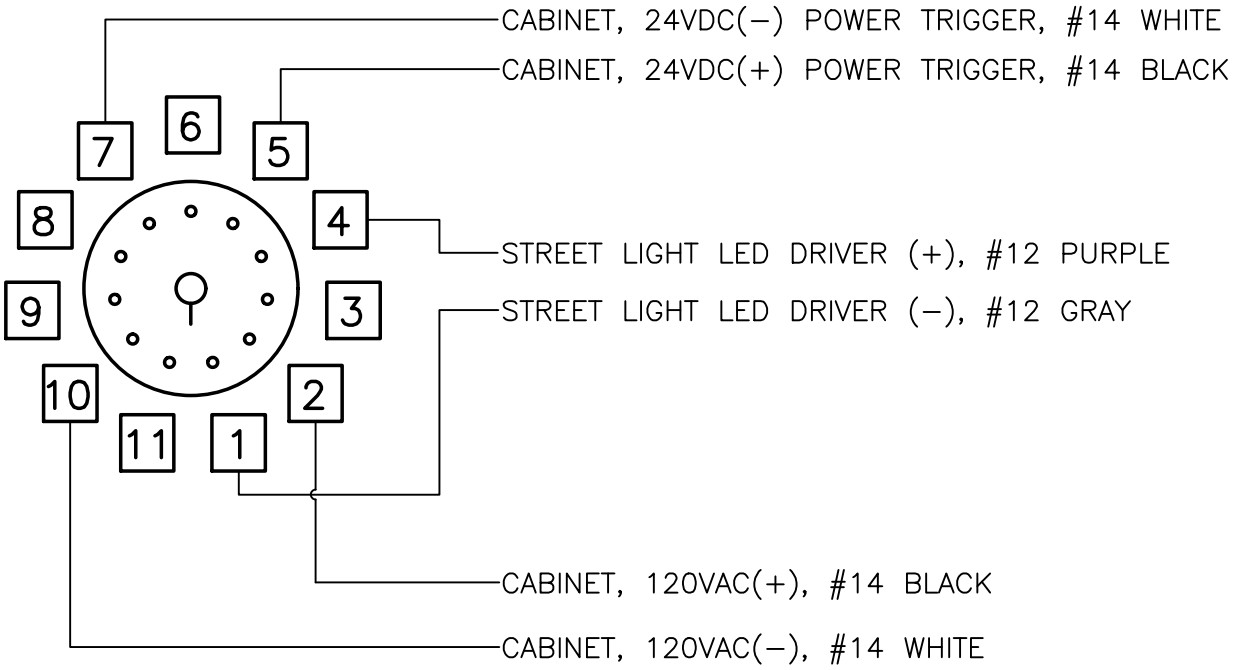

TIME DELAY RELAY, MACROMATIC TR−6172U WITH 11−PIN OCTAL SOCKET 70170−D, TO BE MOUNTED IN CONTROLLER CABINET.

RRFB – AC POWERED

CITY OF Vancouver WASHINGTON

SAFETY LIGHTING BRIGHTENING CIRCUIT DETAIL

CITY OF VANCOUVER
DEPARTMENT OF PUBLIC WORKS
TRANSPORTATION DIVISION

DRAWN BY	APPROVED BY	APPROVAL DATE
CDC		2/21
REVISION	APPROVED BY	APPROVAL DATE
3		3/24

STD. PLAN NO.
T21-17

I:\CITYAPPS\AUTOCAD\STD_DETAILS\DRAWING_FILES\T21-17.DWG

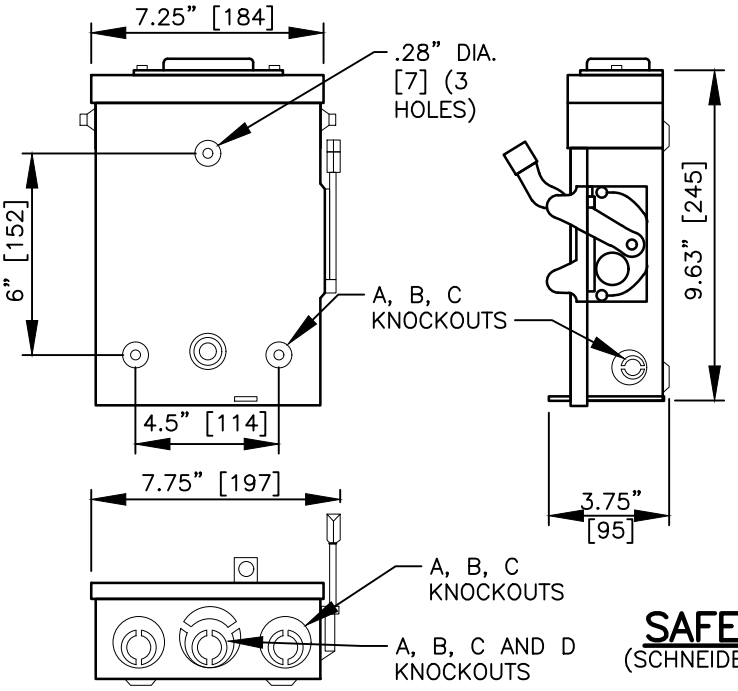

TERMINAL LUGS ‡			
AMPERES	MAX. WIRE	MIN. WIRE	TYPE
30	# 6 AWG	# 14 AWG	CU

KNOCKOUTS				
SYMBOL	A	B	C	D
CONDUIT SIZE	0.50	0.75	1	1.25

SAFETY SWITCH BOX

(SCHNEIDER ELECTRIC PART #D221NRB)

WIRING DIAGRAMS	
FUSIBLE	NOT FUSIBLE

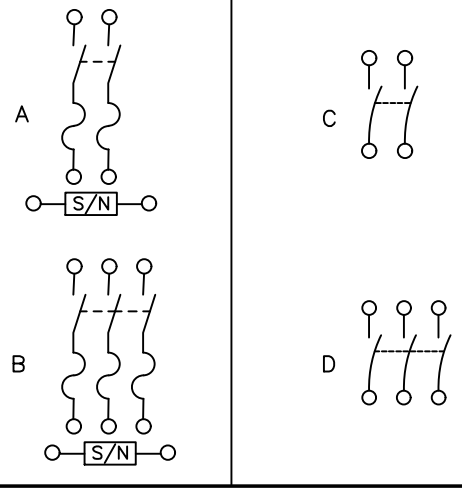

NOTES:
FINISH – GRAY BAKED ENAMEL ELECTRODEPOSITIED OVER CLEANED PHOSPHATIZED STEEL.
UL LISTED – FILE E–2875
ALL NEUTRALS – INSULATED GROUNDABLE
SUITABLE FOR USE AS SERVICE EQUIPMENT
TOP OF NEMW TYPE 3R SWITCHES HAVE PROVISIONS FOR MAIXMUM 2 1/2" BOLT–ON HUB.
SHORT CIRCUIT CURRENT RATINGS:
- ●10,000 AMPERES.
  10,000 AMPERES WHEN USED WITH OR PROTECTED BY CLASS H OR K FUSES.
  100,000 AMPERES WITH CLASS R FUSES.

*FOR CORNER GROUNDED DELTA SYSTEMS.
■PLUG FUSES
‡LUGS SUITABLE FOR 60°C OR 75° CONDUCTORS.

APPROVED MATERIALS LIST:
SEE CITY OF VANCOUVER'S WEB SITE;
http://www.cityofvancouver.us/publicworks/page/transportation–development–review–information

CATALOG NUMBER	VOTAGE RATINGS	WIRING DIAG.	HORSEPOWER RATINGS					
			120VAC		240VAC			
			STD.	MAX.	STD.		MAX.	
			1ø	1ø	1ø	3ø	1ø	3ø
D211NRB●■	240VAC	A	1/2	2	1 1/2	–	3	–
D211NRB	240VAC	A	–	–	1 1/2	3*	3	7 1/2*
D321NRB	240VAC	B	–	–	1 1/2	3	3	7 1/2
DU221RB	240VAC	C	–	–	–	–	3	–
DU321RB	240VAC	D	–	–	–	–	3	7 1/2

NOTES:
1. SEE STANDARD PLAN **T21–18B** FOR ADDITIONAL INFORMATION.
2. ALUMINUM CONDUCTORS ARE NOT ALLOWED.

CITY OF Vancouver WASHINGTON

STREET LIGHT DISCONNECT

CITY OF VANCOUVER
DEPARTMENT OF PUBLIC WORKS
TRANSPORTATION DIVISION

DRAWN BY	APPROVED BY	APPROVAL DATE
CDC		2/21
REVISION	APPROVED BY	APPROVAL DATE
4		3/24

STD. PLAN NO. **T21-18A**

I:\CITYAPPS\AUTOCAD\STD_DETAILS\DRAWING_FILES\T21-18A.DWG

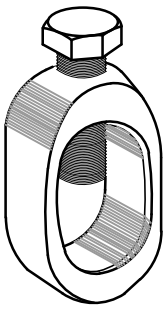

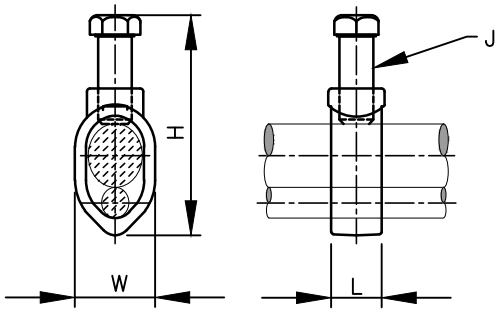

DIMENSIONS:

WIDTH (INCHES)	0.95
HEIGHT (INCHES)	2.19
SIZE (HEX) OR SIZE (BOLT)	3/8
SIZE (HEX) OR SIZE (BOLT)	0.38
B LENGTH (INCHES)	0.63

GENERAL:

PRODUCT DESCRIPTION
MECHANICAL GROUND ROD CLAMP FOR CABLE TO ROD, HIGH STRENGTH, 10 AWG (SOL) – 1 AWG (STR), 5/8" DRIVE ROD, 3/8" STUD.

CONDUCTORS:

ROD SIZE (RANGE)	5/8 INCH
COPPER STRANDED (RANGE)	12 AWG – 1 AWG

PHYSICAL:

PRODUCT MATERIAL: COPPER

APPROVALS/CERTIFICATIONS:

RATED FOR DIRECT BURIAL	Y
UL LISTED	Y
CSA CERTIFIED	Y
ROHS COMPATIBLE	COMPLIANT
UL RECOGNIZED	N
CULUS	N
INDUSTRY STANDARDS	RUS

5/8 INCH GROUND ROD CLAMP

ROD DIAMETER (INCHES x LENGTH/(FT.))
5/8x8

THE POWER LINE HARDWARE GALVANIZED STANDARD GROUND ROD HAS A CORE OF AISI 1010–1029 HOT ROLLED CARBON STEEL. THE GROUND ROD IS CONE POINTED AND CHAMFERED ON THE END TO REDUCE "MUSHROOMING" DURING HAMMER DRIVEN INSTALLATION. HOT DIPPED GALVANIIZED GROUND ROD MUST MEET ASTM A 153 SPECIFICATIONS.

GROUND ROD

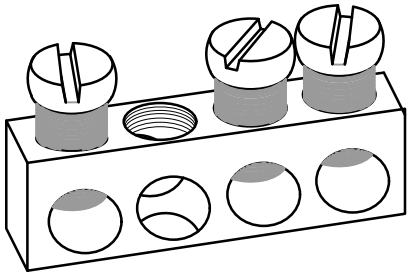

COMPLEMENTARY:

NUMBER OF CONNECTORS	3
AWG GAUGE	AWG 14...AWG 4 COPPER
PROVIDED EQUIPMENT	2 SCREW
BAR LENGTH	1.38 IN (35 MM)
DEVICE MOUNTING	DIRECT MOUNTING BACK OF ENCLOSURE
HEIGHT	0.437 IN (11.10 MM)
DEPTH	0.312 IN (7.92 MM)

LOADCENTRE GROUND BAR ASSEMBLY

NOTE:

1. ALUMINUM CONDUCTORS ARE NOT ALLOWED.

I:\CITYAPPS\AUTOCAD\STD_DETAILS\DRAWING_FILES\T21-18B.DWG

CITY OF Vancouver WASHINGTON

STREET LIGHT DISCONNECT GROUNDING

CITY OF VANCOUVER
DEPARTMENT OF PUBLIC WORKS
TRANSPORTATION DIVISION

DRAWN BY	APPROVED BY	APPROVAL DATE
CDC		2/21
REVISION	APPROVED BY	APPROVAL DATE
4		3/24

STD. PLAN NO.
T21-18B

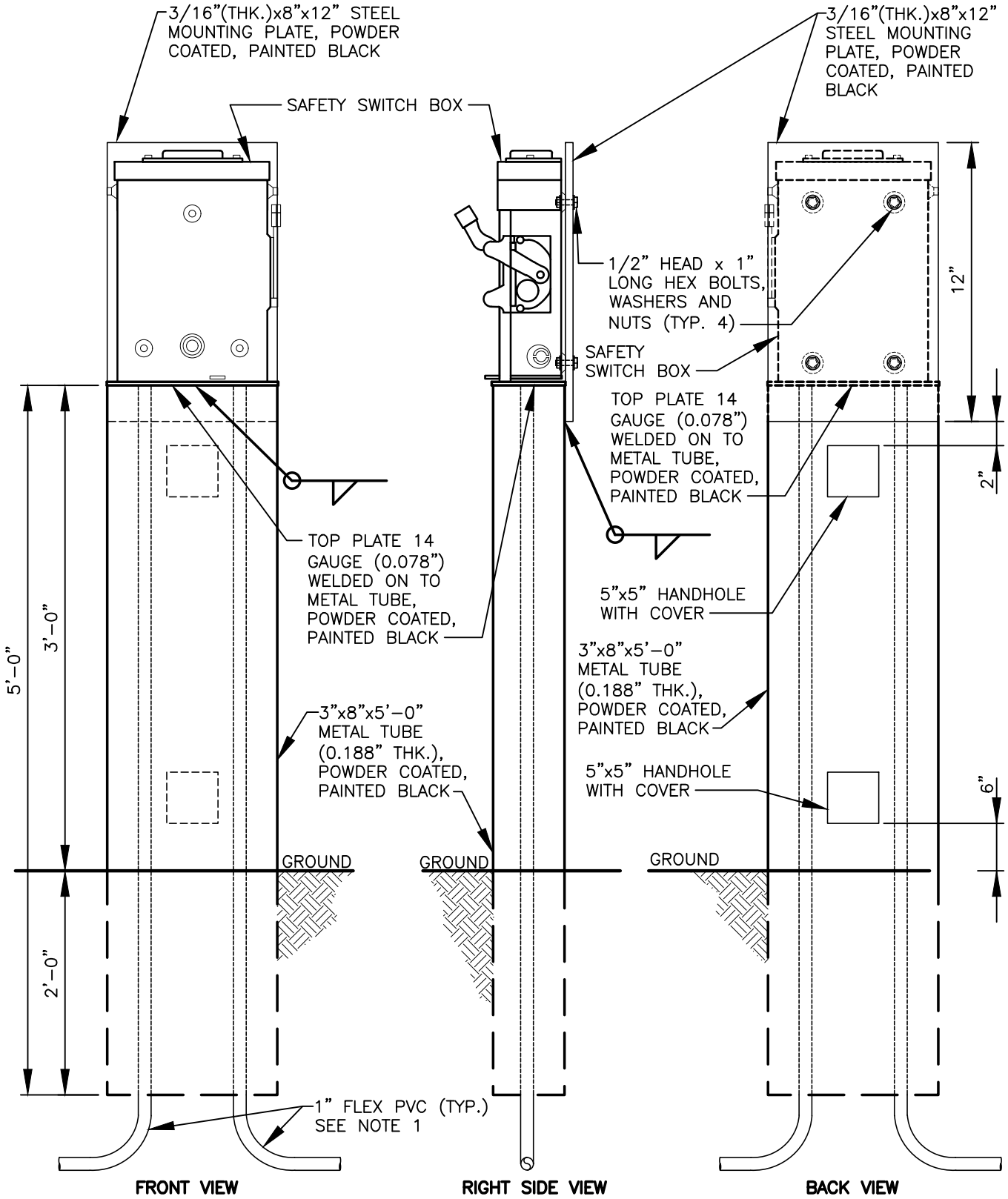

NOTES:

1. 1" FLEX PVC LIQUID TIGHT CONDUIT. TERMINATE FLEX PVC CONDUIT AT THE BASE OF THE DISCONNECT SWITCH. FLEX CONDUIT SHALL BE TERMINATED WITH 1" NYLON LIQUID TIGHT STRAIGHT CONNECTORS.
2. SAFETY SWITCH BOX SHALL BE SCHNEIDER ELECTRIC PART #D221NRB OR APPROVED EQUAL.

CITY OF Vancouver WASHINGTON

STREET LIGHT DISCONNECT DETAIL

CITY OF VANCOUVER
DEPARTMENT OF PUBLIC WORKS
TRANSPORTATION DIVISION

DRAWN BY	APPROVED BY	APPROVAL DATE
CDC		2/21
REVISION	APPROVED BY	APPROVAL DATE
4		3/24

STD. PLAN NO. **T21-18C**

I:\CITYAPPS\AUTOCAD\STD_DETAILS\DRAWING_FILES\T21-18C.DWG

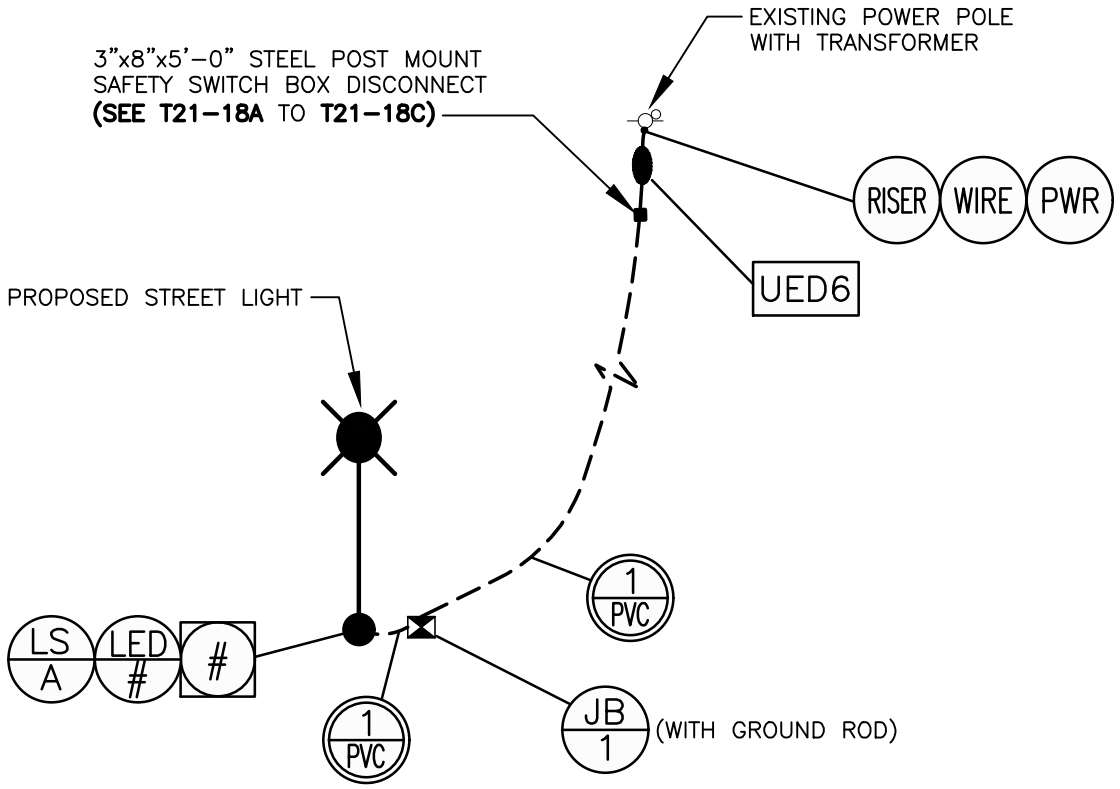

GENERAL NOTES:

1. DISCONNECT PLACED AT OR NEAR A CPU TRANSFORMER OR POWER PEDESTAL.
2. 1" CONDUIT FROM THE DISCONNECT TO FIRST J-BOX.
3. 1" CONDUITS WILL BE REQUIRED FROM J-BOX TO J-BOX FOR DAISY CHAINED CIRCUITS.
4. TYPE 1 J-BOX WILL BE PLACED AT EACH POLE WITHIN FOUR FEET.
5. GROUND ROD NEEDS TO BE INSTALLED IN EACH J-BOX. ALL METAL POLES SHALL BE GROUNDED.
6. 1" PVC FLEX SHALL BE USED TO GO FROM J-BOX TO LIGHT POLE.
7. EACH HOT LEG NEEDS TO BE FUSED AT THE BASE OF EACH POLE.
8. ALL WIRES IN J-BOX SHALL BE TERMINATED USING (POLARIS SALES CO. INC IPL4-4, 4-14 AWG CU9AL WIRE CONNECTOR) OR EQUIVALENT, OR COMPRESSION CONNECTIONS.
9. LIGHT POLES NEED TO BE INSTALLED USING OUR APPROVED STEEL ANCHOR BASES, UNLESS THE POLE IS A DIRECT BURY STYLE.

CITY OF Vancouver WASHINGTON

DIRECT FEED LIGHTING (NEIGHBORHOODS)

CITY OF VANCOUVER
DEPARTMENT OF PUBLIC WORKS
TRANSPORTATION DIVISION

DRAWN BY	APPROVED BY	APPROVAL DATE
CDC		2/21
REVISION	APPROVED BY	APPROVAL DATE
4		3/24

STD. PLAN NO.
T21-18D

I:\CITYAPPS\AUTOCAD\STD_DETAILS\DRAWING_FILES\T21-18D.DWG

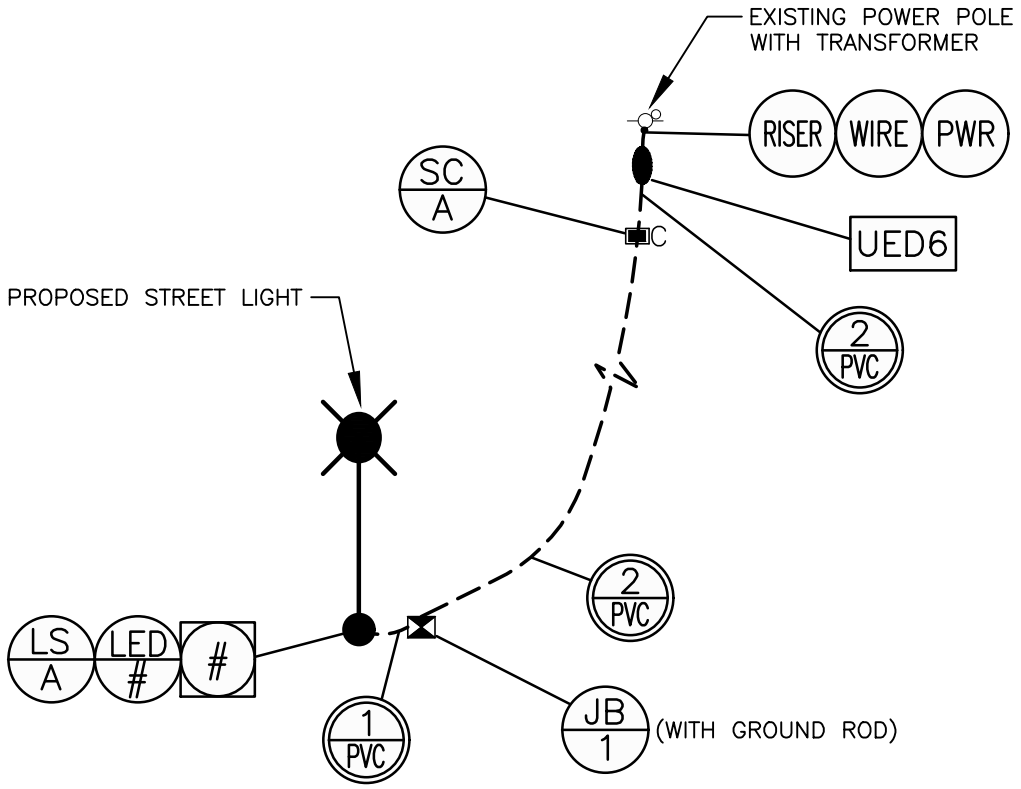

GENERAL NOTES:

1. 2" CONDUIT FROM THE SERVICE CABINET TO FIRST J–BOX.
2. 2" CONDUITS WILL BE REQUIRED FROM J–BOX TO J–BOX.
3. TYPE 1 J–BOX WILL BE PLACED AT EACH POLE WITHIN FOUR FEET.
4. GROUND ROD NEEDS TO BE INSTALLED IN EACH J–BOX. ALL METAL POLES SHALL BE GROUNDED.
5. 1" PVC FLEX SHALL BE USED TO GO FROM J–BOX TO LIGHT POLE.
6. EACH HOT LEG NEEDS TO BE FUSED AT THE BASE OF EACH POLE.
7. ALL WIRES IN J–BOX SHALL BE TERMINATED USING (POLARIS SALES CO. INC IPL4–4, 4–14 AWG CU9AL WIRE CONNECTOR) OR EQUIVALENT, OR COMPRESSION CONNECTIONS.
8. LIGHT POLES NEED TO BE INSTALLED USING OUR APPROVED STEEL ANCHOR BASES.

CITY OF Vancouver WASHINGTON

METERED SERVICE CONTACTOR CONTROLLED LIGHTING SYSTEM (MAJOR ROADWAYS/CAPITAL PROJECTS)

CITY OF VANCOUVER
DEPARTMENT OF PUBLIC WORKS
TRANSPORTATION DIVISION

DRAWN BY	APPROVED BY	APPROVAL DATE
CDC		3/22
REVISION	APPROVED BY	APPROVAL DATE
2		3/24

STD. PLAN NO.
T21-18E

I:\CITYAPPS\AUTOCAD\STD_DETAILS\DRAWING_FILES\T21-18E.DWG