I:\CITYAPPS\AUTOCAD\STD_DETAILS\DRAWING_FILES\TC52_COV.DWG

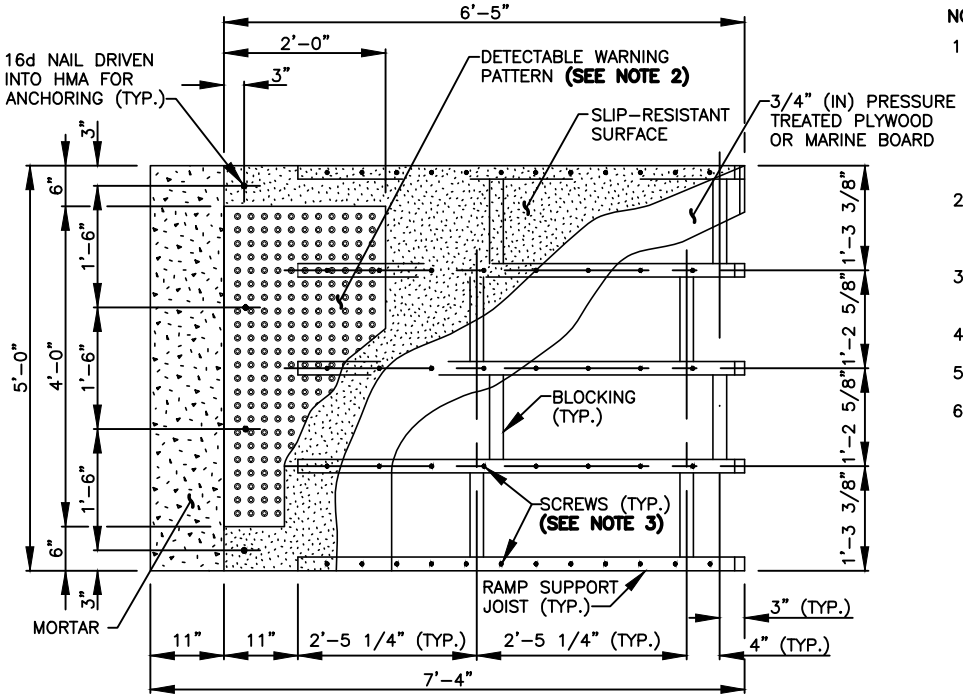

TOP VIEW
RAMP DETAIL

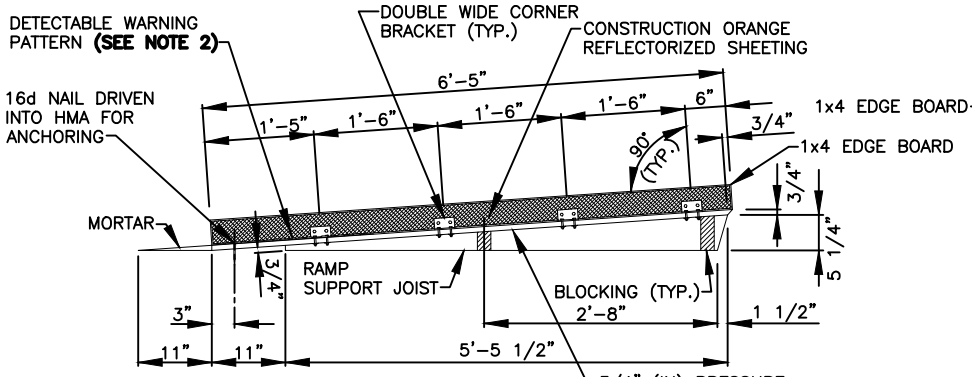

SIDE VIEW
RAMP AND EDGE BOARD

NOTES

1. THIS DESIGN ASSUMES OPTIMAL CONDITIONS AND A STANDARD CURB HEIGHT OF 6" (IN). INSTALLED RAMPS SHALL BE NO STEEPER THAN 12H : 1V, AND SHALL HAVE A CROSS-SLOPE OF 2% OR LESS. USE SHIMS OR GROUT AS REQUIRED TO ADJUST FOR EXISTING CONDITIONS AND TO PREVENT ROCKING. SHIMS SHALL BE NO HIGHER THAN 1" (IN), AND SHALL BE SECURED TO THE RAMP. FOR CURBS SHORTER THAN 6" (IN), INSTALL A RAMP ON THE SIDEWALK, NO STEEPER THAN 12H : 1V, MADE OF GROUT OR AS APPROVED BY THE ENGINEER. ADJUSTMENTS TO THE RAMP DIMENSIONS SHOWN MAY BE REQUIRED TO MATCH EXISTING CONDITIONS.
2. THE DETECTABLE WARNING PATTERN SHALL BE INSTALLED ONLY WHEN THE INTENT IS TO GUIDE PEDESTRIANS DIRECTLY ACROSS THE ROADWAY (CROSSWALK). SEE STANDARD PLAN F-40.10 FOR DETAILS.
3. SCREWS SHALL BE USED TO SECURE THE RAMP SURFACE. SPACING SHALL BE IN ACCORDANCE WITH THE CURRENT BUILDING CODE.
4. USE A SLIP-RESISTANT TREATMENT FOR THE SURFACE OF RAMP.
5. ALL FASTENERS SHALL BE GALVANIZED.
6. DO NOT INSTALL A HAND RAILING IF USING THE EDGE BOARD OPTION.

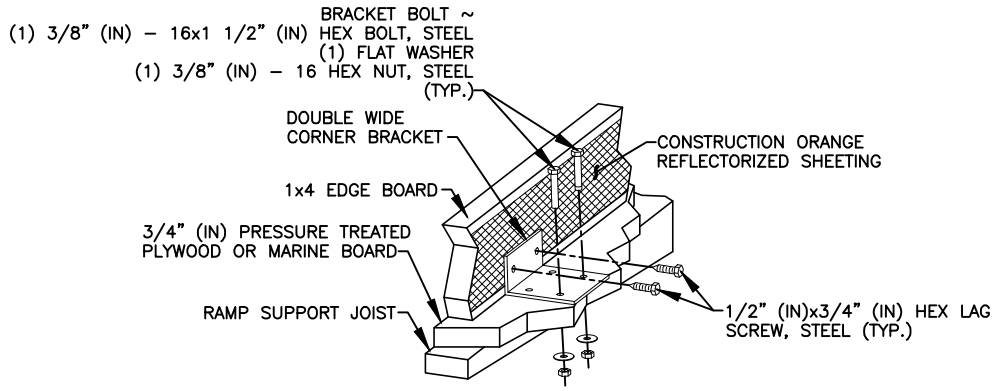

PERSPECTIVE VIEW

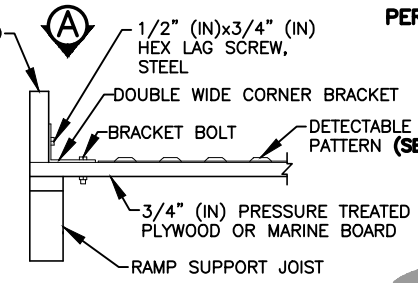

DETAIL A

END VIEW
EDGE BOARD ATTACHMENT DETAIL

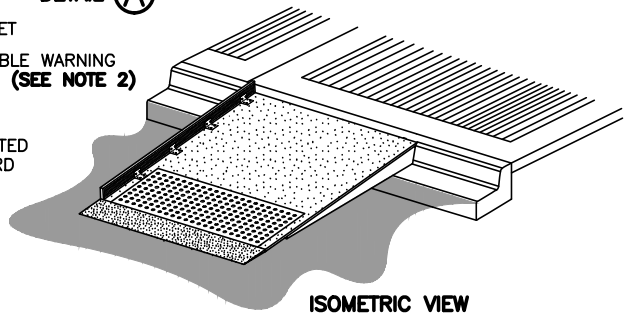

ISOMETRIC VIEW

CITY OF Vancouver WASHINGTON

TRAFFIC CONTROL STANDARD PLAN
TEMPORARY PEDESTRIAN RAMP WITH EDGE BOARD

CITY OF VANCOUVER
DEPARTMENT OF PUBLIC WORKS
TRANSPORTATION DIVISION

DRAWN BY	APPROVED BY	APPROVAL DATE
CDC		3/16
REVISION	APPROVED BY	APPROVAL DATE
3		3/24

STD. PLAN NO.
TC52